SEEDMASTER | 2023

NOVA

PARTS BOOK

Table of Contents

SEED MASTER™

520/560 Nova Frame	1
630 Tow Behind Nova Frame	3
780/820 Nova Frame	5
630 T/B Nova Frame	7
780 T/B Nova Frame	9
Hitch Jack	11
Hitch Jack - T/B Nova	13
Hitch Hose Holder	15
Hitch Hose Holder - T/B Nova	17
Distribution Pipes Hitch Guide	19
Nova Electric Panel	21
T/B Nova Electric Panel	23
Axle - Single 800/65R32	25
Axle - Dual 710/70R38	27
Clearance Lights	29
Rear Hitch - 520/780 Nova	31
Rear Hitch - 560/820 Nova	33
Rear Hitch - Tow Between Nova	35
Meter Box - Standard Tank	37
Meter Box - Canola Tank	39
Common Drive Shaft	41
Standard Gear Reduction Drive	43
Standard Gear Reduction Drive	45
Standard Gear Reduction Drive	47
Tow-Between Gear Reduction Drive	49
Tow-Between Gear Reduction Drive	51
Tow-Between Gear Reduction Drive	53
Canola Gear Reduction Drive	55
Canola Gear Reduction Drive	57
Canola Gear Reduction Drive	59
Tow Between Canola Gear Reduction Drive	61
Tow Between Canola Gear Reduction Drive	63
Tow Between Canola Gear Reduction Drive	65
Australian Canola Gear Reduction Drive	67
Australian Canola Gear Reduction Drive	69
Australian Canola Gear Reduction Drive	71
Australian Tow Between Canola Gear Reduction Drive	73
Australian Tow Between Canola Gear Reduction Drive	75
Australian Tow Between Canola Gear Reduction Drive	77

Table of Contents

Raven Hydraulic Meter Motor	79
Tank to Meter Transition	81
40 BU Canola Nova Tank	83
110 BU Tow Between Nova Tank	85
110 BU Tow Between Nova Tank	87
Tank Cradle/Load Cells	89
Tank Lid	91
Nova 260 BU Y-Section Dual Shoot 10 Zone	93
Nova 260 BU Y-Section Single Shoot 10 Zone	95
Nova 260 BU Y-Section Dual Shoot 8 Zone	97
Nova 260 BU Y-Section Single Shoot 8 Zone	99
Nova 110 BU Tow Behind Y-Section Dual Shoot 10-Zone	101
Nova 110 BU Tow Behind Y-Section Single Shoot 10-Zone	103
Nova 110 BU Tow Behind Y-Section Dual Shoot 8-Zone	105
Nova 110 BU Tow Behind Y-Section Single Shoot 8-Zone	107
Nova 260 BU Tow Between Y-Section Dual Shoot 10-Zone	109
Nova 260 BU Tow Between Y-Section Single Shoot 10-Zone	111
Nova 260 BU Tow Between Y-Section Dual Shoot 8-Zone	113
Nova 260 BU Tow Between Y-Section Single Shoot 8-Zone	115
Nova 110 BU Tow Between Y-Section Dual Shoot 10-Zone	117
Nova 110 BU Tow Between Y-Section Single Shoot 10-Zone	119
Nova 110 BU Tow Between Y-Section Dual Shoot 8-Zone	121
Nova 110 BU Tow Between Y-Section Single Shoot 8-Zone	123
Fans/Air Splitter	125
Tow Between Fans/Air Splitter	127
Rear Walkway - 820/560 Nova	129
Rear Walkway - 820/560 Nova	131
Rear Walkway - 780/520 Nova	133
Side Walkway - 780/520 Nova	135
Side Walkway - 630 Tow Between Nova	137
Side Walkway - 780 Tow Between Nova	139
Long Conveyor - 780/820 Nova	141
Long Conveyor - 780/820 Nova	143
Long Conveyor - 780/820 Nova	145
Long Conveyor Latch - 780-820 Nova	147
Short Conveyor 520/560/630 Nova	149
Short Conveyor 520/560/630 Nova	151
Short Conveyor Latch 520/560/630 Nova	153
Liquid Nova Pump/Valves	155

Table of Contents

Liquid Nova Pump/Valves	157
Liquid Fertilizer Plumbing Schematic	159
Top Up Air Schematic - 520 Nova Dual Shoot	161
Top Up Air Schematic - 520 Nova Single Shoot	163
Top Up Air Schematic - 560 Nova Dual Shoot	165
Top Up Air Schematic - 630 TBT Nova Single Shoot	167
Top Up Air Schematic - 630 TBH Nova Single Shoot	169
Top Up Air Schematic - 780 Nova Dual Shoot	171
Top Up Air Schematic - 780 Nova Single Shoot	173
Top Up Air Schematic - 820 Nova Dual Shoot	175
Compressed Air System	177
Meter Drive Hydraulic Schematic - Nova - 2 Tanks	179
Meter Drive Hydraulic Schematic - Nova - 3 Tanks	181
Meter Drive Hydraulic Schematic - Nova - 260L - 1 Tank	183
Meter Drive Hydraulic Schematic Nova T/B - 2 Tanks	185
Meter Drive Hydraulic Schematic T/B Nova + 1 Tank	187
Meter Drive Hydraulic Schematic Nova + 1 Tank	189
Meter Drive Hydraulic Schematic T/B Nova - 3 Tanks	191
Hydraulic Lids Schematic - Single Shoot	193
Hydraulic Lids Schematic - Dual Shoot	195
Hydraulic Lids Schematic + 1 Tank	197
Hydraulic Lids Schematic - Canola Tank	199
Hydraulic Lids Schematic - 110 BU Tank - T/B Nova	201
Dual Fans Hydraulic Schematic	203
Single Fan Hydraulic Schematic	205
Dual Fans Hydraulic Schematic - T/B Nova	207
Single Fan Hydraulic Schematic - T/B Nova	209
Long Conveyor Hydraulic Schematic 780/820 Nova	211
Short Conveyor Hydraulic Schematic 520/560/630 Nova	213
Transport Latch Hydraulic Schematic - Long Conveyor	215
Transport Latch Hydraulic Schematic - Short Conveyor	217
Clearance Lights Electrical Schematic	219
Tow Between Clearance Lights Electrical Schematic	221
Nova Work Lights Electrical Schematic	223
Nova Conveyor Control Electrical Schematic	225
ISO 780 NOVA-10-D	227
ISO 630 NOVA-10-D	228
ISO 780 NOVA -10-S & Ultra Pro II 360	229
ISO 520L NOVA-10-D	230

520/560 Nova Frame

Item	Qty.	Part No.	Description	Item	Qty.	Part No.	Description
1	1	500125	BDL, TRACK SYS - CAMOPLAST - NOVA - 100-3612				
1	1	500141	BDL, REAR AXLE - NOVA - DUAL 800/65R32				
2	2	501500	ASSY, RAIL - SIDE - FRAME - NOVA 520BU - BLK				
3	1	500190-1	ASSY, BEAM - FRT CROSS - NOVA - BLK				
4	1	501520	ASSY, BEAM - FRONT HITCH - RH - NOVA 520BU - BLK				
5	1	501521	ASSY, FRONT HITCH - LH - NOVA - 520BU - BLK				
6	1	500170	ASSY, FRT HITCH TONGUE - NOVA - BLK				
7	1	254513	DRAWBAR - HOLLAND - DB-100FQ1				
8	4	500165	PLATE, CLAMP 1/2 IN - U-CLAMP - NOVA - BLK				
9	2	500166	PLATE, SHIM 1/2 IN - U-CLAMP - NOVA - BLK				
10	1	500205	BDL, HITCH JACK - NOVA				
11	4	250029	BOLT, HEX 7/8 X 4 1/2 UNC GR5 PL				
12	4	404225	BUSH, 1 3/4OD X .9ID X 1 3/8 IN - FRONT CASTOR				
13	80	250553	WASHER, FLAT 7/8IN GR8 PL				
14	84	250452	NUT, HEX - 7/8 UNC PL				
15	64	250006	BOLT, HEX 7/8 X 2 1/4 UNC GR5 PL				
16	12	250044	BOLT, HEX 7/8 X 3 IN UNC GR5 PL				
17	1	500955	ASSY, CRADLE - MID HITCH - 2 1/2 HOSES - NOVA - BLK				
18	4	250234	BOLT, U-SQ - 1/2 UNC X 12 ID X 8 IN - 2 IN THD - GR5 PL				
19	8	250555	WASHER, FLAT - 1/2 IN - GR8 - PL				
20	8	250450	NUT, HEX 1/2 UNC GR5 PL				
21	1	500950	ASSY, CRADLE - MID HITCH - REAR - 2 1/2 HOSES - NOVA -BLK				
22	2	500230	BDL, HYD HOSE HOLDERS - FRONT HITCH - NOVA				
23	1	501895	BDL , DISTRIBUTION PIPES HITCH GUIDE - NOVA - BLK				

520/560 Nova Frame

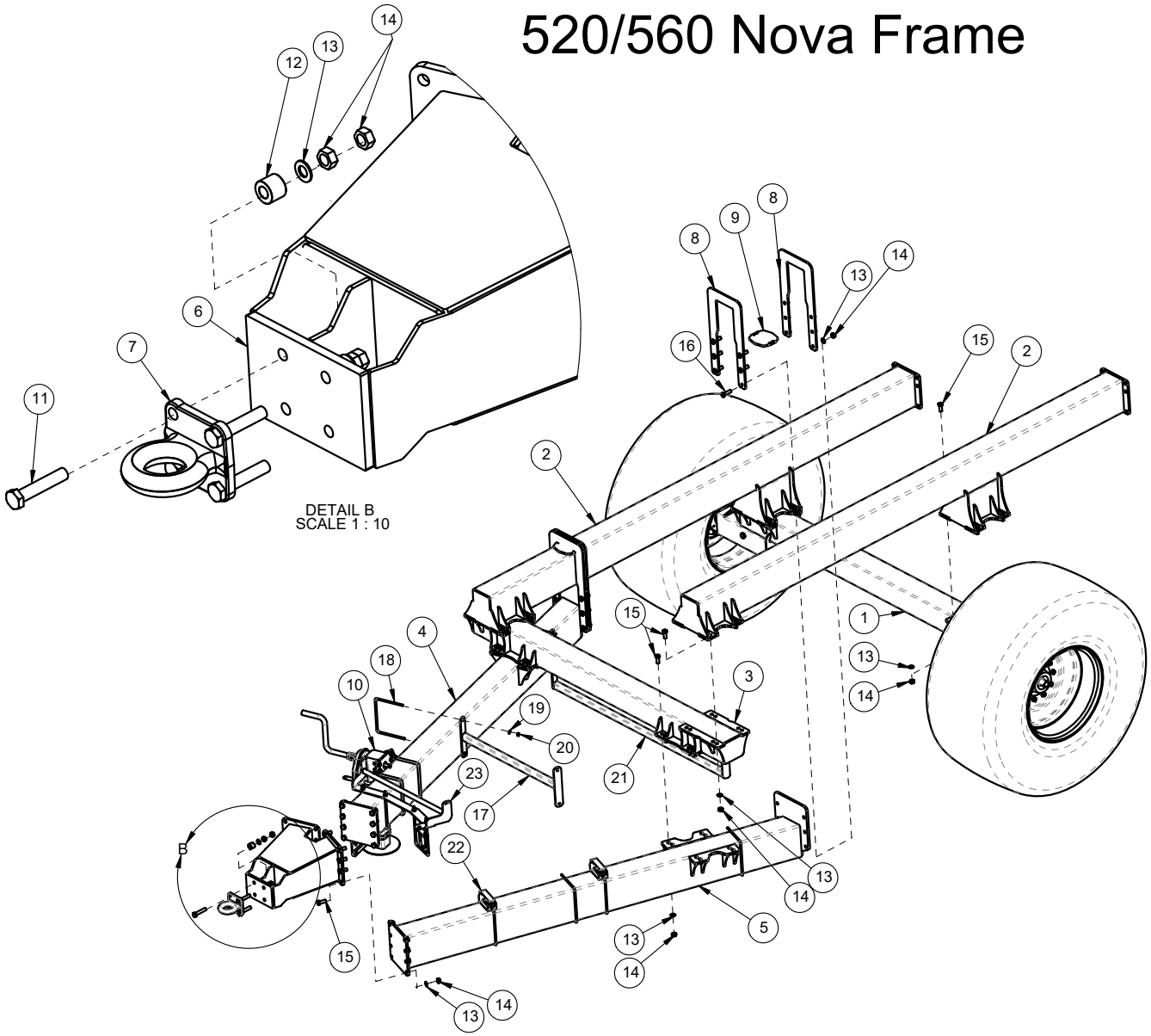

630 Tow Behind Nova Frame

Item	Qty.	Part No.	Description	Item	Qty.	Part No.	Description
1	1	500140	BDL, REAR AXLE - NOVA - DUAL 710/70R38				
2	2	503290	ASSY, RAIL - SIDE - T/B NOVA - BLK				
3	1	500190-1	ASSY, BEAM - FRT CROSS - NOVA - BLK				
4	1	503280	ASSY, BEAM - FRONT HITCH - LH - T/B NOVA - BLK				
5	1	503285	ASSY, BEAM - FRONT HITCH - RH - T/B NOVA - BLK				
6	4	500165	PLATE, CLAMP 1/2 IN - U-CLAMP - NOVA - BLK				
7	2	500166	PLATE, SHIM 1/2 IN - U-CLAMP - NOVA - BLK				
8	84	250452	NUT, HEX - 7/8 UNC PL				
9	80	250553	WASHER, FLAT 7/8IN GR8 PL				
10	12	250044	BOLT, HEX 7/8 X 3 IN UNC GR5 PL				
11	64	250006	BOLT, HEX 7/8 X 2 1/4 UNC GR5 PL				
12	4	250029	BOLT, HEX 7/8 X 4 1/2 UNC GR5 PL				
13	4	250234	BOLT, U-SQ - 1/2 UNC X 12 ID X 8 IN - 2 IN THD - GR5 PL				
14	8	250555	WASHER, FLAT - 1/2 IN - GR8 - PL				
15	8	250450	NUT, HEX 1/2 UNC GR5 PL				
16	1	500205	BDL, HITCH JACK - NOVA				
17	1	500170	ASSY, FRT HITCH TONGUE - NOVA - BLK				
18	1	254513	DRAWBAR - HOLLAND - DB-100FQ1				
19	4	404225	BUSH, 1 3/4OD X .9ID X 1 3/8 IN - FRONT CASTOR				
20	2	500230	BDL, HYD HOSE HOLDERS - FRONT HITCH - NOVA				
21	1	500955	ASSY, CRADLE - MID HITCH - 2 1/2 HOSES - NOVA - BLK				
22	1	500950	ASSY, CRADLE - MID HITCH - REAR - 2 1/2 HOSES - NOVA -BLK				
23	1	501895-1	BDL , DISTRIBUTION PIPES HITCH GUIDE - NOVA - BLK				

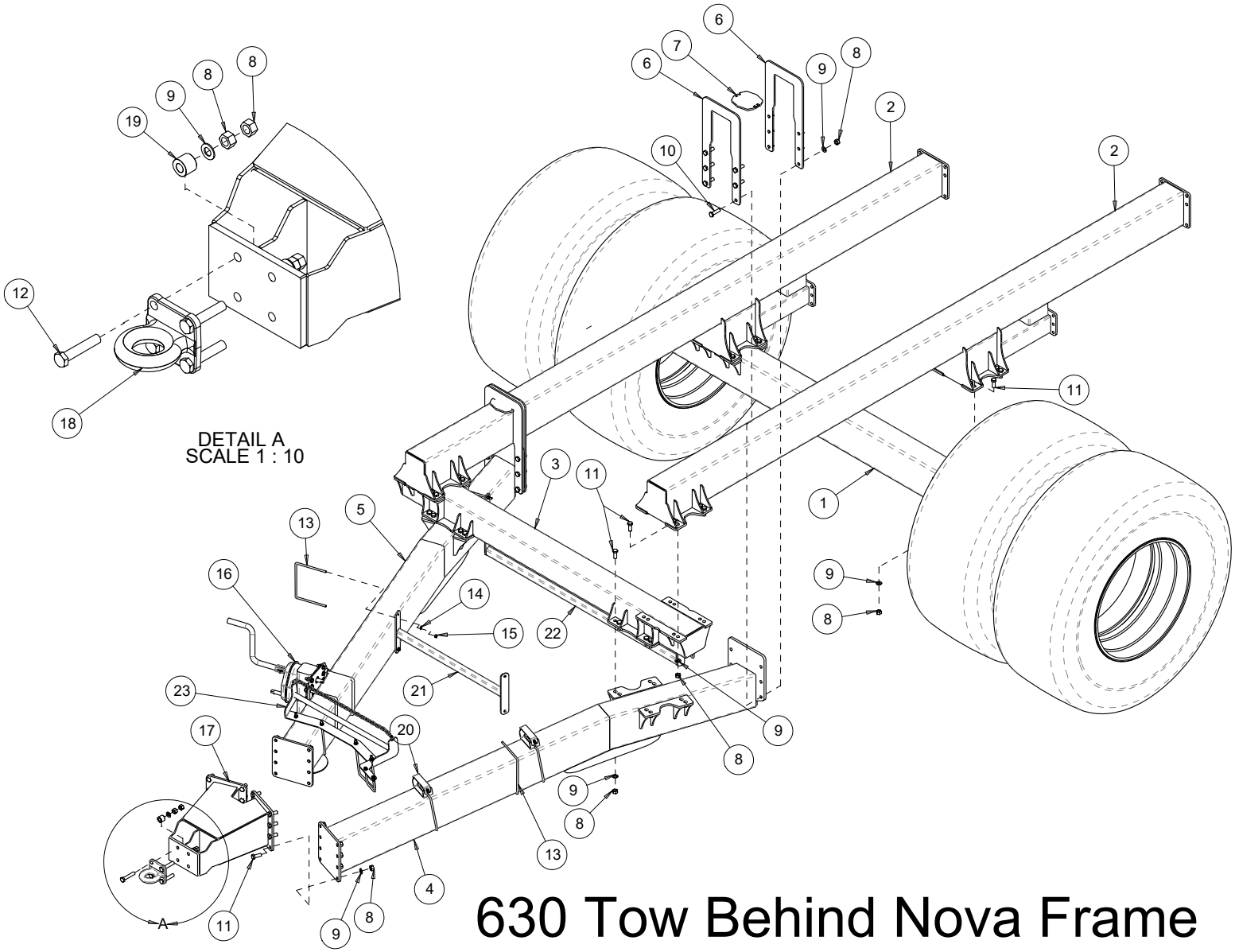

630 Tow Behind Nova Frame

780/820 Nova Frame

Item	Qty.	Part No.	Description	Item	Qty.	Part No.	Description
1	1	500125	BDL, TRACK SYS - CAMOPLAST - NOVA - 100-3612				
1	1	500140	BDL, REAR AXLE - NOVA - DUAL 710/70R38				
2	2	500100-1	ASSY, RAIL - SIDE - FRAME - NOVA - BLK				
3	1	500190-1	ASSY, BEAM - FRT CROSS - NOVA - BLK				
4	1	500150	ASSY, BEAM - FRONT HITCH - RH - NOVA - BLK				
5	1	500151	ASSY, FRONT HITCH - LH - NOVA				
6	1	500170	ASSY, FRT HITCH TONGUE - NOVA - BLK				
7	1	254513	DRAWBAR - HOLLAND - DB-100FQ1				
8	4	500165	PLATE, CLAMP 1/2 IN - U-CLAMP - NOVA - BLK				
9	2	500166	PLATE, SHIM 1/2 IN - U-CLAMP - NOVA - BLK				
10	1	500205	BDL, HITCH JACK - NOVA				
11	4	250029	BOLT, HEX 7/8 X 4 1/2 UNC GR5 PL				
12	4	404225	BUSH, 1 3/4OD X .9ID X 1 3/8 IN - FRONT CASTOR				
13	80	250553	WASHER, FLAT 7/8IN GR8 PL				
14	84	250452	NUT, HEX - 7/8 UNC PL				
15	64	250006	BOLT, HEX 7/8 X 2 1/4 UNC GR5 PL				
16	12	250044	BOLT, HEX 7/8 X 3 IN UNC GR5 PL				
17	2	500230	BDL, HYD HOSE HOLDERS - FRONT HITCH - NOVA				
18	1	500950	ASSY, CRADLE - MID HITCH - REAR - 2 1/2 HOSES - NOVA -BLK				
19	1	500955	ASSY, CRADLE - MID HITCH - 2 1/2 HOSES - NOVA - BLK				
20	4	250234	BOLT, U-SQ - 1/2 UNC X 12 ID X 8 IN - 2 IN THD - GR5 PL				
21	8	250555	WASHER, FLAT - 1/2 IN - GR8 - PL				
22	8	250450	NUT, HEX 1/2 UNC GR5 PL				
23	1	501895	BDL , DISTRIBUTION PIPES HITCH GUIDE - NOVA - BLK				

780/820 Nova Frame

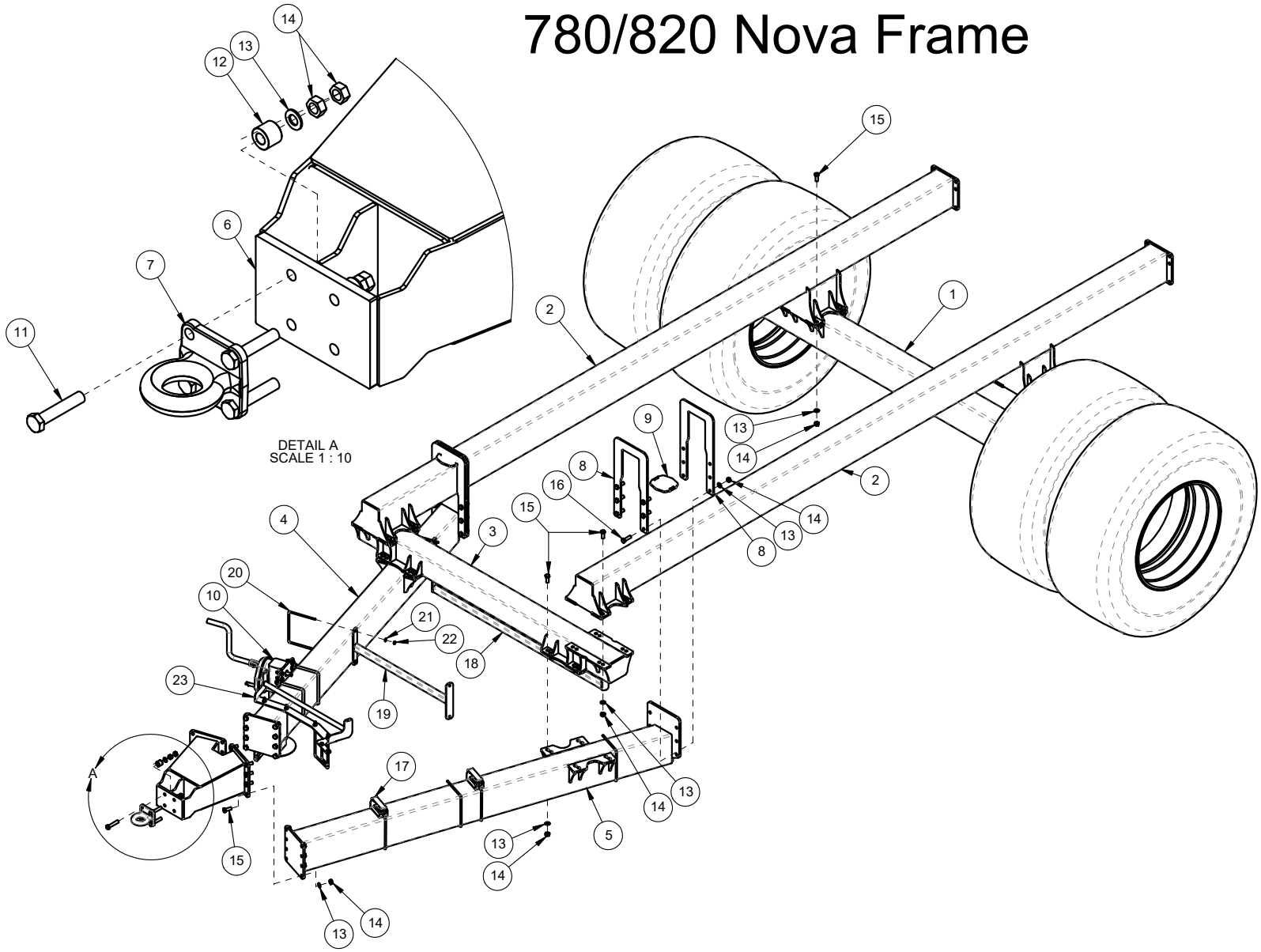

630 T/B Nova Frame

Item	Qty.	Part No.	Description	Item	Qty.	Part No.	Description
1	2	503290	ASSY, RAIL - SIDE - T/B NOVA - BLK				
2	1	500140	BDL, REAR AXLE - NOVA - DUAL 710/70R38				
3	1	500190-1	ASSY, BEAM - FRT CROSS - NOVA - BLK				
4	1	503280	ASSY, BEAM - FRONT HITCH - LH - T/B NOVA - BLK				
5	1	503285	ASSY, BEAM - FRONT HITCH - RH - T/B NOVA - BLK				
6	1	503295	ASSY, FRT HITCH TONGUE - TOW BETWEEN NOVA - BLK				
7	1	503305	ASSY, FRONT PIVOT TONGUE - T/B NOVA				
8	4	500165	PLATE, CLAMP 1/2 IN - U-CLAMP - NOVA - BLK				
9	2	500166	PLATE, SHIM 1/2 IN - U-CLAMP - NOVA - BLK				
10	1	400319-1	BDL, HOSE HOLDER - FRT HITCH				
10	1	503194-1	BDL, HOSE HOLDER - FRT HITCH - T/B NOVA				
11	1	503310-2	BDL, REAR HITCH - T/B NOVA				
12	1	503360	BDL, HITCH JACK - T/B NOVA				
13	80	250452	NUT, HEX - 7/8 UNC PL				
14	80	250553	WASHER, FLAT 7/8IN GR8 PL				
15	12	250044	BOLT, HEX 7/8 X 3 IN UNC GR5 PL				
16	64	250006	BOLT, HEX 7/8 X 2 1/4 UNC GR5 PL				
17	4	250008	BOLT, HEX 7/8 X 4 UNC GR5 PL				
18	1	503259-1	BDL, ZONE COMMAND - COMPRESSED AIR SYSTEM MNT/HDW - T/B NOVA				

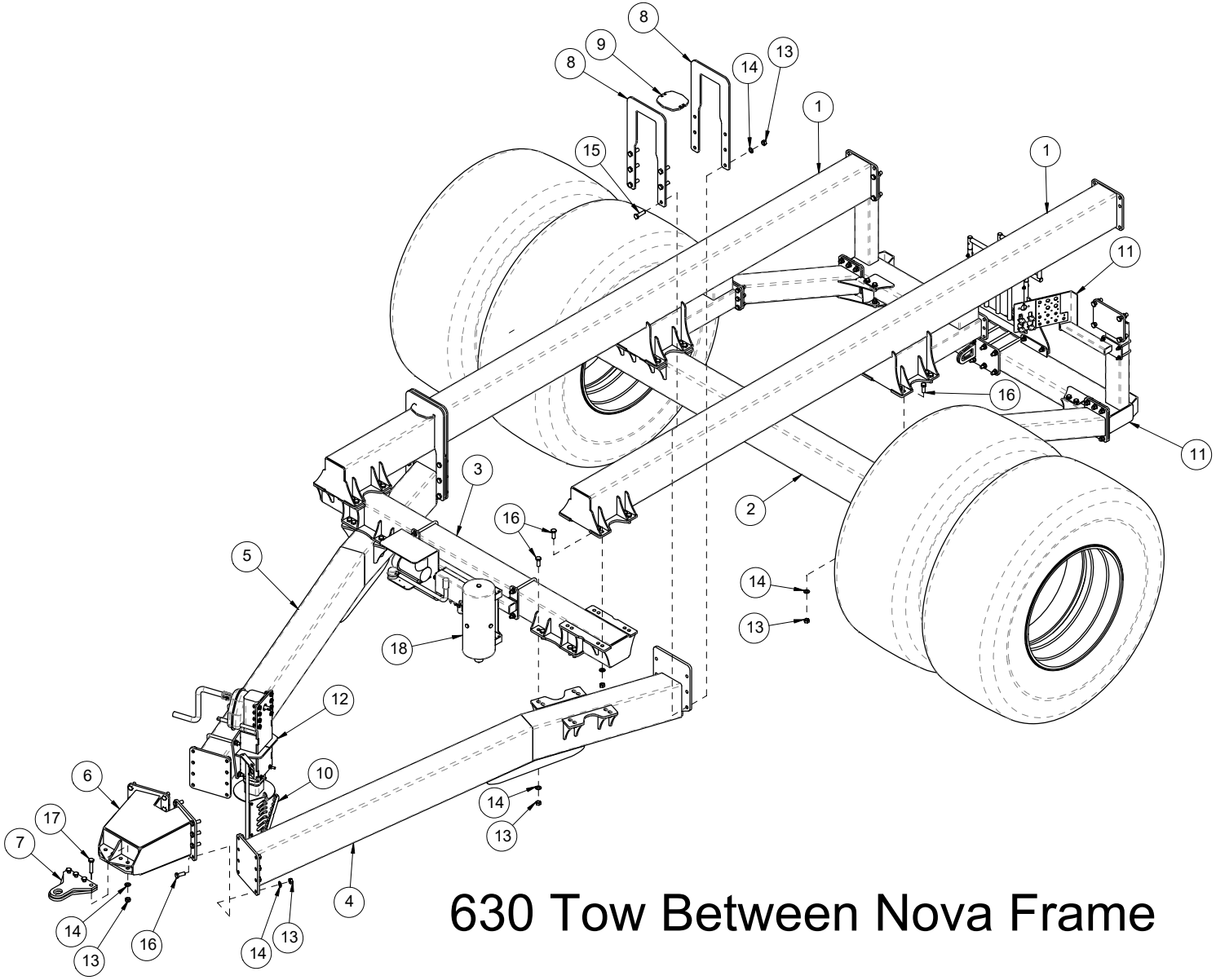

630 Tow Between Nova Frame

780 T/B Nova Frame

Item	Qty.	Part No.	Description	Item	Qty.	Part No.	Description
1	2	503358	ASSY, RAIL - SIDE - NOVA 780 BU - TBW - BLK				
2	1	500190-1	ASSY, BEAM - FRT CROSS - NOVA - BLK				
3	1	503378	ASSY, BEAM - FRONT HITCH - LH - NOVA 780BU - TBW - BLK				
4	1	503362	ASSY, BEAM - FRONT HITCH - RH - NOVA 780 BU - TBW - BLK				
5	1	503295	ASSY, FRT HITCH TONGUE - TOW BETWEEN NOVA - BLK				
6	1	503305	ASSY, FRONT PIVOT TONGUE - T/B NOVA				
7	4	500165	PLATE, CLAMP 1/2 IN - U-CLAMP - NOVA - BLK				
8	1	500166	PLATE, SHIM 1/2 IN - U-CLAMP - NOVA - BLK				
9	1	500167	PLATE, SHIM 1/2 IN - U-CLAMP - NOTCHED - NOVA - BLK				
10	1	503194-1	BDL, HOSE HOLDER - FRT HITCH - T/B NOVA				
11	1	503310-2	BDL, REAR HITCH - T/B NOVA				
12	1	503360	BDL, HITCH JACK - T/B NOVA				
13	82	250452	NUT, HEX - 7/8 UNC PL				
14	82	250553	WASHER, FLAT 7/8IN GR8 PL				
15	12	250044	BOLT, HEX 7/8 X 3 IN UNC GR5 PL				
16	66	250006	BOLT, HEX 7/8 X 2 1/4 UNC GR5 PL				
17	4	250008	BOLT, HEX 7/8 X 4 UNC GR5 PL				
18	1	503259-1	BDL, ZONE COMMAND - COMPRESSED AIR SYSTEM MNT/HDW - T/B NOVA				
19	1	500140	BDL, REAR AXLE - NOVA - DUAL 710/70R38				

SEED MASTER™

780 Tow Between Nova Frame

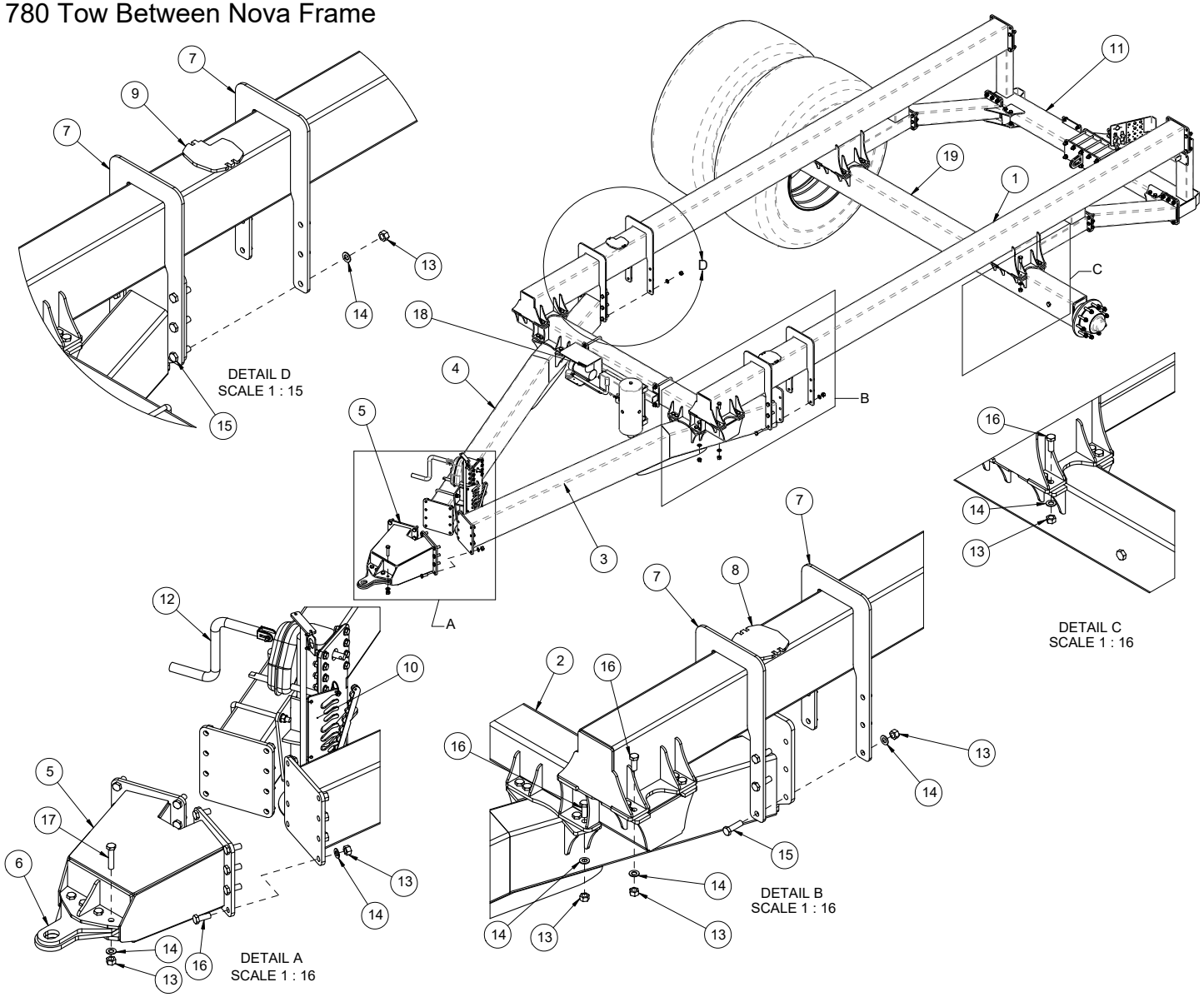

780 T/B Nova Frame

Hitch Jack

Item	Qty.	Part No.	Description	Item	Qty.	Part No.	Description
1	1	254506	JACK, HITCH - NOVA				
2	1	500200-3	ASSY, HITCH JACK MNT - NOVA - BLK				
3	1	400421	PLATE, 1/4 IN - HOSE HOLDER - BLK				
4	1	400327	ASSY, LOCK BAR - HOSE HOLDER - BLK				
5	2	250232	BOLT, U-SQ - 3/4 UNC X 12 ID X 10 IN - 2 IN THD - GR8 PL				
6	4	250552	WASHER, FLAT 3/4IN GR8 PL				
7	4	250451	NUT, HEX 3/4 UNC GR5 PL				
8	16	250550	WASHER, FLAT 5/8 IN GR8 PL				
9	8	250455	NUT, HEX 5/8 UNC GR5 PL				
10	8	250047	BOLT, HEX 5/8 X 2 UNC GR5 PL				
11	1	250200	BOLT, U-SQ - 1/2 UNC X 5 1/4 ID X 8 IN - 2 IN THD - GR8 PL				
12	2	250555	WASHER, FLAT - 1/2 IN - GR8 - PL				
13	2	250450	NUT, HEX 1/2 UNC GR5 PL				
14	1	250594	PIN, QUICK/LOCK - 1/4 X 1 3/4 IN EFF - ROUND				
15	1	254507	HANDLE, LANDING JACK - NOVA				
16	1	250077	BOLT, HEX 3/8 X 2 1/2 IN GR5 PL				
17	1	250503	NUT, LOCK - 3/8 UNC - STOVER - PL				
18	2	250557	WASHER, FLAT - 3/8 IN GR8 PL				
19	1	250033	BOLT, HEX 1/4 X 1 IN GR5 PL				
20	7	250559	WASHER, FLAT - 1/4 IN PL				
21	3	250507	NUT, LOCK - 1/4 UNC - STOVER - PL				
22	2	250078	BOLT, HEX - 1/4 X 1 1/2 UNC GR 5 PL				
23	1	259116	DECAL, HOSE HOLDER - FRT HITCH				
-	0	500205	BDL, HITCH JACK - NOVA				

Hitch Jack
Part Number: 500205

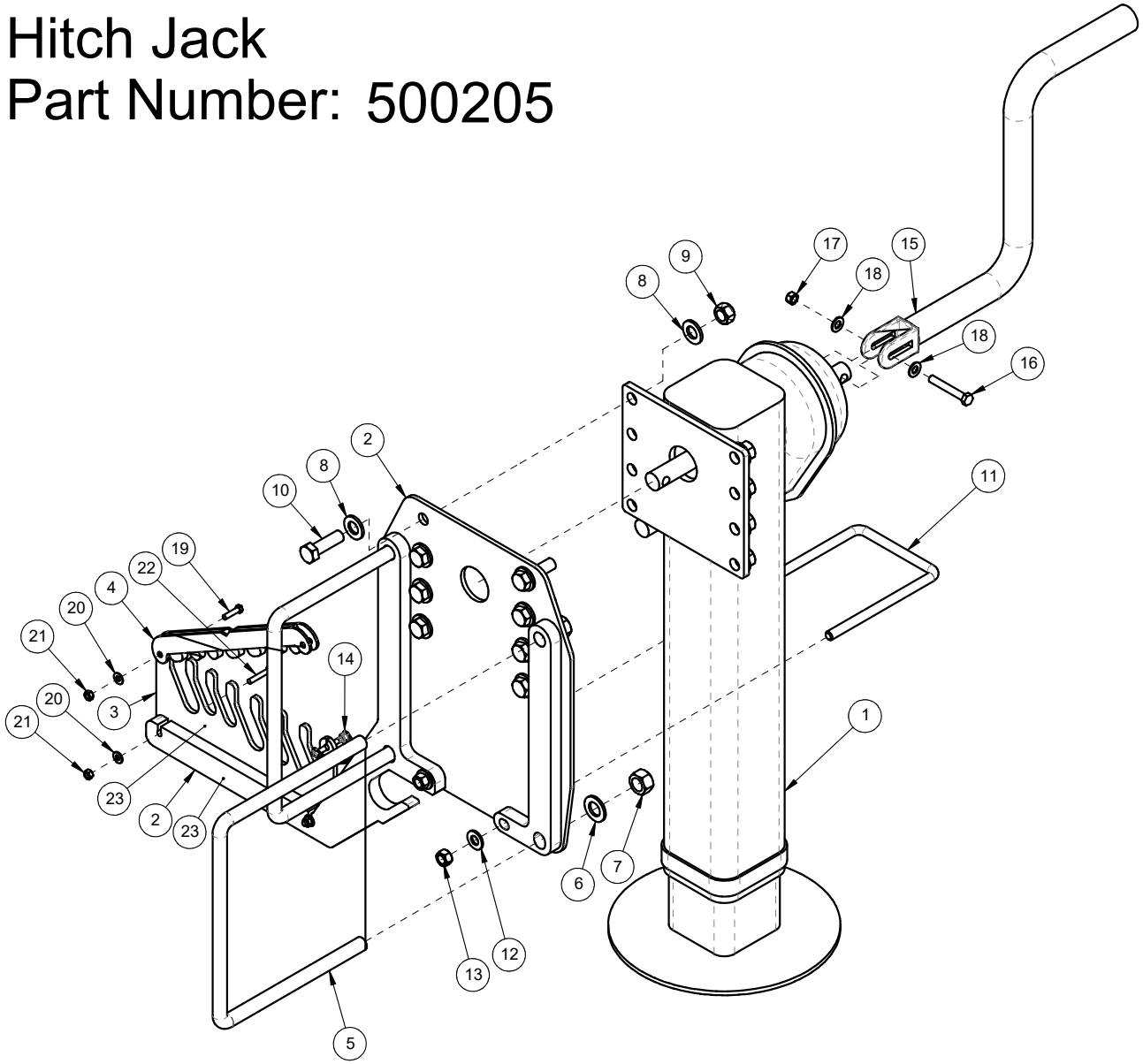

Hitch Jack - T/B Nova

Item	Qty.	Part No.	Description	Item	Qty.	Part No.	Description
1	1	254506	JACK, HITCH - NOVA				
2	2	250232	BOLT, U-SQ - 3/4 UNC X 12 ID X 10 IN - 2 IN THD - GR8 PL				
3	4	250552	WASHER, FLAT 3/4IN GR8 PL				
4	4	250451	NUT, HEX 3/4 UNC GR5 PL				
5	16	250550	WASHER, FLAT 5/8 IN GR8 PL				
6	8	250455	NUT, HEX 5/8 UNC GR5 PL				
7	8	250047	BOLT, HEX 5/8 X 2 UNC GR5 PL				
8	1	250200	BOLT, U-SQ - 1/2 UNC X 5 1/4 ID X 8 IN - 2 IN THD - GR8 PL				
9	2	250555	WASHER, FLAT - 1/2 IN - GR8 - PL				
10	2	250450	NUT, HEX 1/2 UNC GR5 PL				
11	1	250077	BOLT, HEX 3/8 X 2 1/2 IN GR5 PL				
12	1	250503	NUT, LOCK - 3/8 UNC - STOVER - PL				
13	2	250557	WASHER, FLAT - 3/8 IN GR8 PL				
14	1	503365	ASSY, JACK MNT - T/B NOVA - BLK				
15	1	254507	HANDLE, LANDING JACK - NOVA				
-	0	503360	BDL, HITCH JACK - T/B NOVA				

Tow Between Hitch Jack
Part Number: 503360

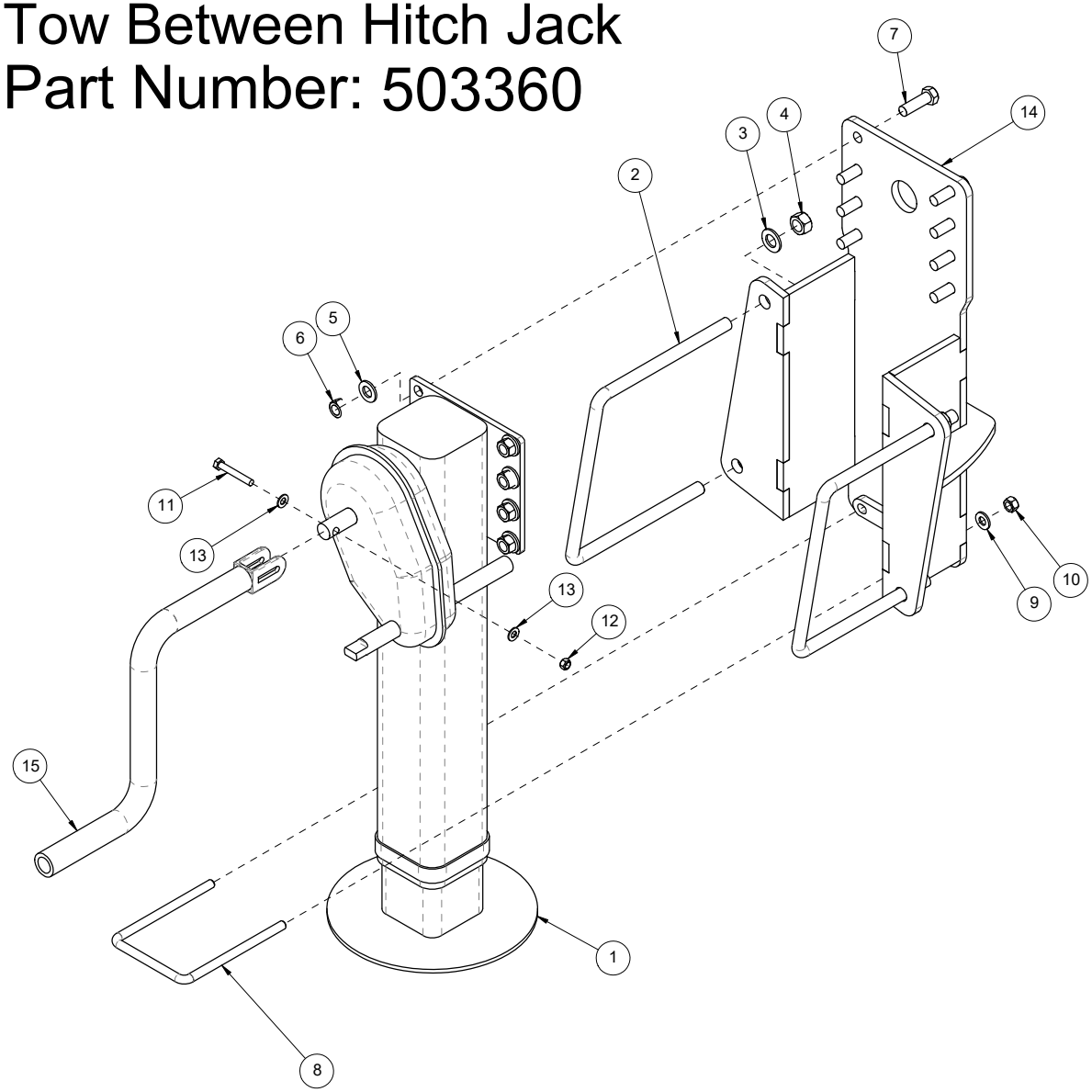

Hitch Hose Holder

Item	Qty.	Part No.	Description	Item	Qty.	Part No.	Description
1	1	500231	ASSY, HOSE HOLDER - FRONT HITCH - NOVA - BLK				
2	1	500235	PLATE, FRMD 10GA - HOSE HOLDER TOP - FRT HITCH				
3	1	250234	BOLT, U-SQ - 1/2 UNC X 12 ID X 8 IN - 2 IN THD - GR5 PL				
4	2	250555	WASHER, FLAT - 1/2 IN - GR8 - PL				
5	2	250450	NUT, HEX 1/2 UNC GR5 PL				
6	2	250101	BOLT, CARRIAGE - 3/8 X 1 1/4 IN UNC GR5 PL				
7	2	250400	NUT, FLANGE - 3/8 UNC PL				
-	0	500230	BDL, HYD HOSE HOLDERS - FRONT HITCH - NOVA				

Hitch Hose Holder
Part Number: 500230

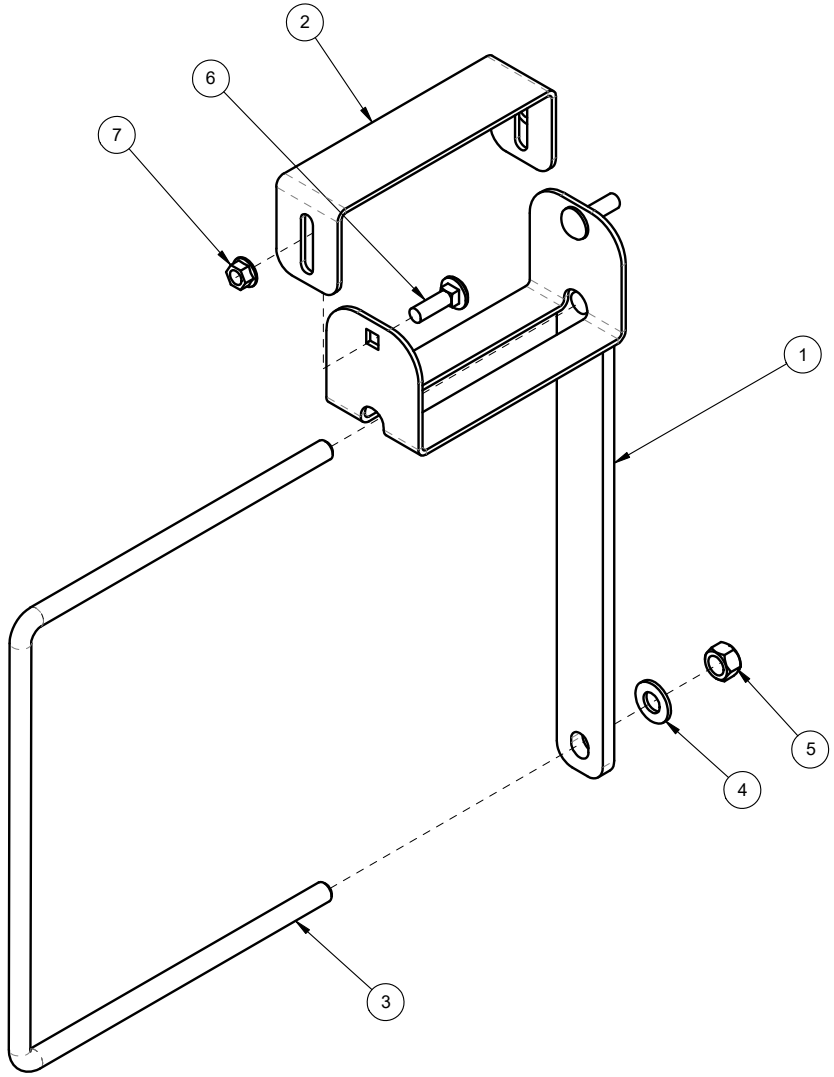

Hitch Hose Holder - T/B Nova

Item	Qty.	Part No.	Description	Item	Qty.	Part No.	Description
1	1	503195-3	ASSY, HOSE HOLDER - FRT HITCH - T/B NOVA - BLK				
2	1	400421	PLATE, 1/4 IN - HOSE HOLDER - BLK				
3	1	400327	ASSY, LOCK BAR - HOSE HOLDER - BLK				
4	1	400422	SHEET, 10 GA - ISO BULKHEAD - BLK				
5	1	503496	ASSY, HOSE HOLDER MNT - T/B NOVA - BLK				
6	4	250122	BOLT, HEX 1/4 X 3/4 IN GR5 PL				
7	1	250600	PIN, SPRING - 5/16 X 2 1/2 IN - PL				
8	4	250458	NUT, HEX - 1/4 UNC PL				
9	1	250507	NUT, LOCK - 1/4 UNC - STOVER - PL				
10	1	250033	BOLT, HEX 1/4 X 1 IN GR5 PL				
11	3	250559	WASHER, FLAT - 1/4 IN PL				
12	1	250594	PIN, QUICK/LOCK - 1/4 X 1 3/4 IN EFF - ROUND				
13	1	250554	WASHER, FLAT - 1 IN GR8 PL				
14	1	259116	DECAL, HOSE HOLDER - FRT HITCH				
-	0	503194-1	BDL, HOSE HOLDER - FRT HITCH - T/B NOVA				

Tow Between Hitch Hose Holder
Part Number: 503194-1

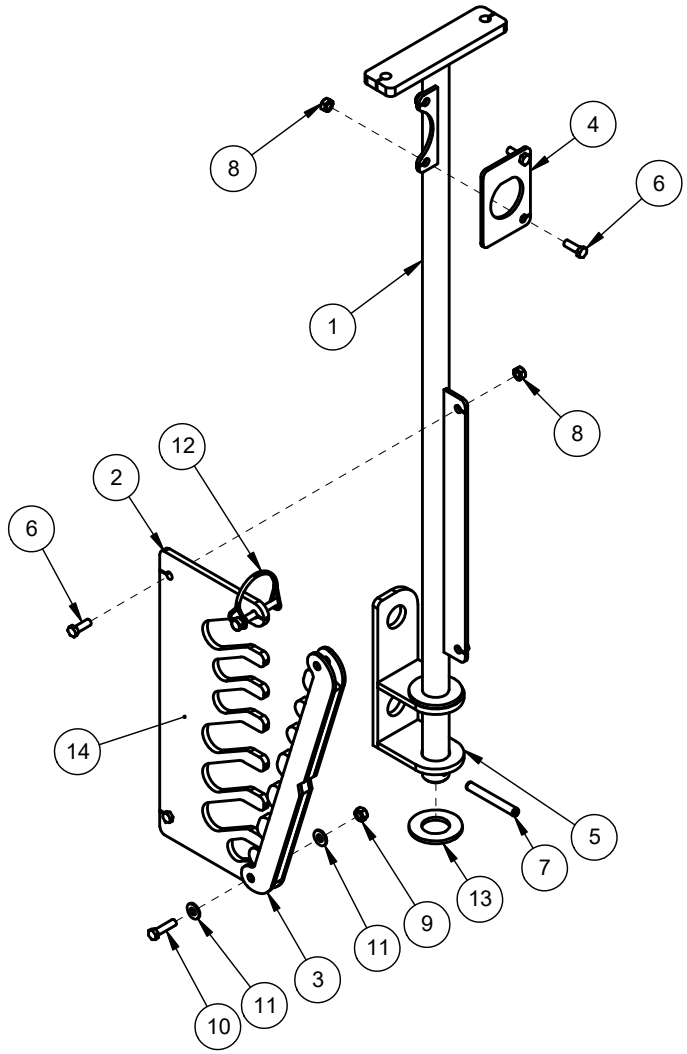

Distribution Pipes Hitch Guide

Item	Qty.	Part No.	Description	Item	Qty.	Part No.	Description
1	1	501996	ASSY, DISTRIBUTION PIPES HITCH GUIDE				
2	1	250223	BOLT, U-SQ - 1/2 UNC X 4 ID X 6 IN - 2 IN THD - GR5 PL				
3	2	250233	BOLT, U-SQ - 1/2 UNC X 8 ID X 14 IN - 2IN THD - GR8 PL				
4	8	250450	NUT, HEX 1/2 UNC GR5 PL				
5	8	250555	WASHER, FLAT - 1/2 IN - GR8 - PL				
6	1	254565	CHAIN, 5/16 IN G70 - GOLD				
7	1	254566	CHAIN, SNAP LINK 5/16 IN G70 - GOLD				
8	37	254561	CHAIN, 1/4 IN - GRADE 40 - PL				
-	0	501895-1	BDL , DISTRIBUTION PIPES HITCH GUIDE - NOVA - BLK				

Distribution Pipes Hitch Guide
Part Number: 501895-1

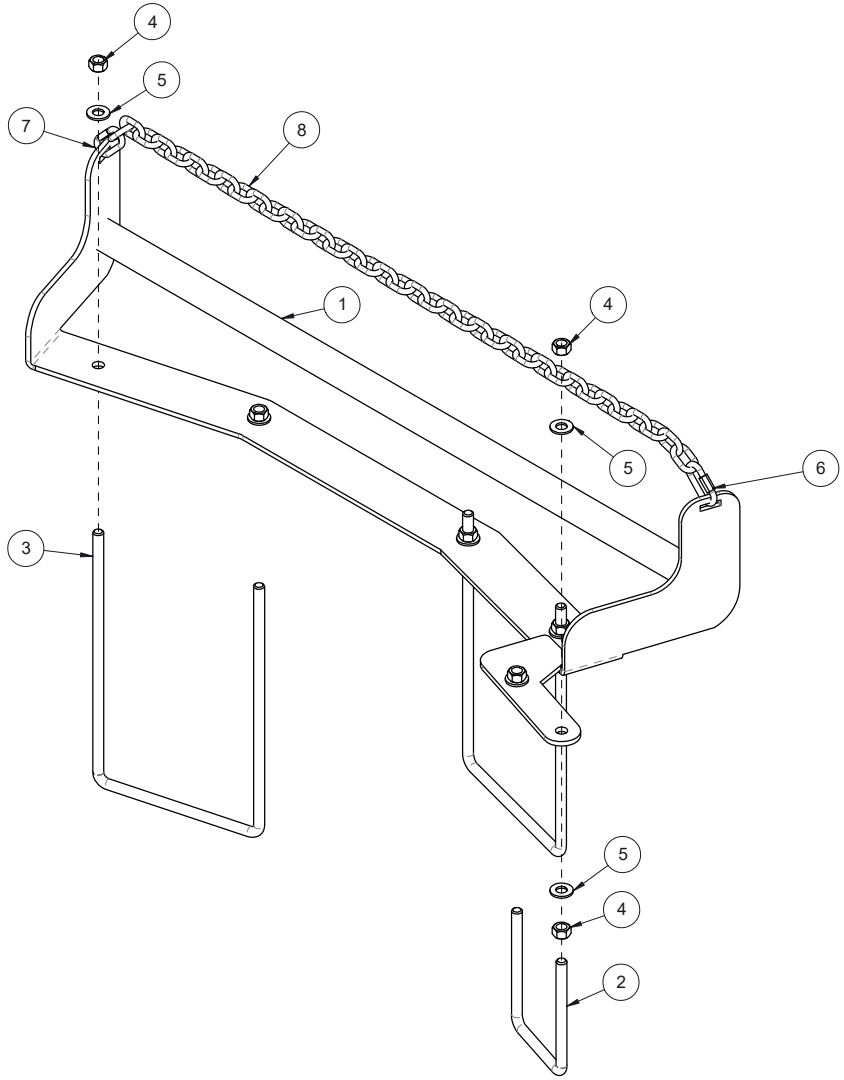

Nova Electric Panel

Item	Qty.	Part No.	Description	Item	Qty.	Part No.	Description
1	1	500597-3	PLATE, FRMD 10GA - AIR/ELEC HOUSING				
2	1	500602-4	PLATE, FRMD 10GA - PANEL COVER - AIR/ELEC HOUSING				
3	2	500605-1	ASSY, MOUNT - AIR/ELEC HOUSING - NO				
4	2	250694	PURCH. - STANLEY 4X4 IN SS HINGE				
5	2	250693	LATCH, PULL T-HANDLE DRAW AND KEEPER				
6	8	250129	MACHINE SCREW - #8-32				
7	8	250182	WASHER, FLAT - M8				
8	8	250634	NUT, MACHINE 10-32 - PLATED				
9	8	250122	BOLT, HEX 1/4 X 3/4 IN GR5 PL				
10	8	250559	WASHER, FLAT - 1/4 IN PL				
11	8	250507	NUT, LOCK - 1/4 UNC - STOVER - PL				
12	4	250552	WASHER, FLAT 3/4IN GR8 PL				
13	4	250451	NUT, HEX 3/4 UNC GR5 PL				
14	2	250220	BOLT, U-SQ - 3/4 UNC X 8 ID X 10 IN -2 IN THD - GR8 PL				
15	8	250013	BOLT, HEX 1/2 X 1 1/4 IN GR5 PL				
16	8	250555	WASHER, FLAT - 1/2 IN - GR8 - PL				
17	8	250450	NUT, HEX 1/2 UNC GR5 PL				

Electrical Panel
Part Number: 500330-2

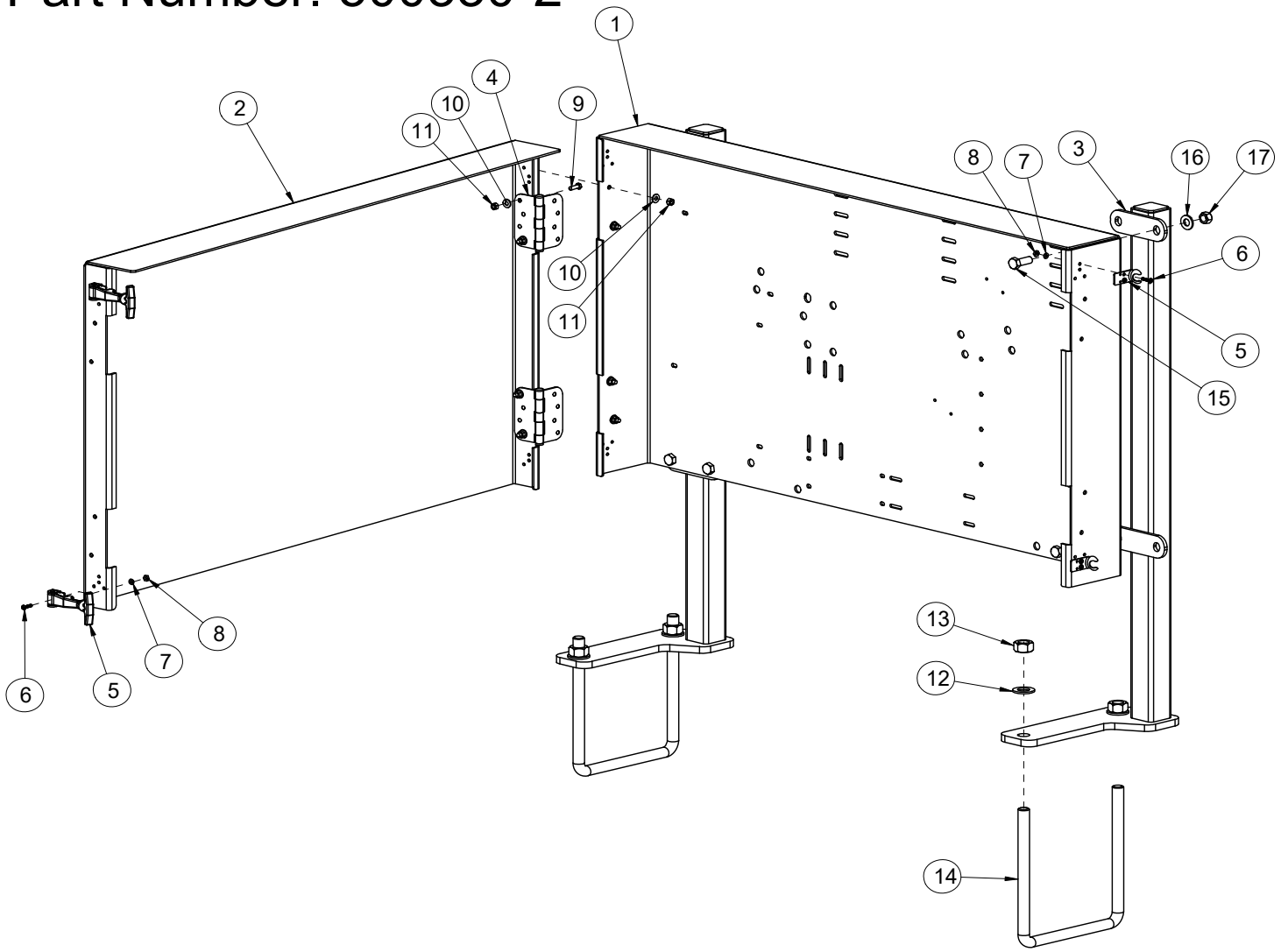

T/B Nova Electric Panel

Item	Qty.	Part No.	Description	Item	Qty.	Part No.	Description
1	1	502500-1	ASSY, TANK PANEL MOUNT - YEL				
2	2	250208	BOLT, U-SQ - 1/2 UNC X 4 ID X 5 IN - 2 IN THD - GR8 PL				
3	8	250555	WASHER, FLAT - 1/2 IN - GR8 - PL				
4	8	250450	NUT, HEX 1/2 UNC GR5 PL				
5	4	250001	BOLT, HEX 1/2 X 1 1/2 IN GR5 PL				
6	1	500597-3	PLATE, FRMD 10GA - AIR/ELEC HOUSING				
7	1	500602-4	PLATE, FRMD 10GA - PANEL COVER - AIR/ELEC HOUSING				
8	2	250694	PURCH. - STANLEY 4X4 IN SS HINGE				
9	2	250693	LATCH, PULL T-HANDLE DRAW AND KEEPER				
10	8	250633	SCREW, MACHINE 10-32 X 1 IN - PLATED				
11	8	250679	WASHER, 10-32 PL				
12	8	250634	NUT, MACHINE 10-32 - PLATED				
13	8	250122	BOLT, HEX 1/4 X 3/4 IN GR5 PL				
14	8	250559	WASHER, FLAT - 1/4 IN PL				
15	8	250507	NUT, LOCK - 1/4 UNC - STOVER - PL				
-	0	502502-2	BDL, AIR/ELEC CONTROL HOUSING - FRONT CANOLA TANK / TB NOVA				

Tow Between Electrical Panel
Part Number: 502502-2

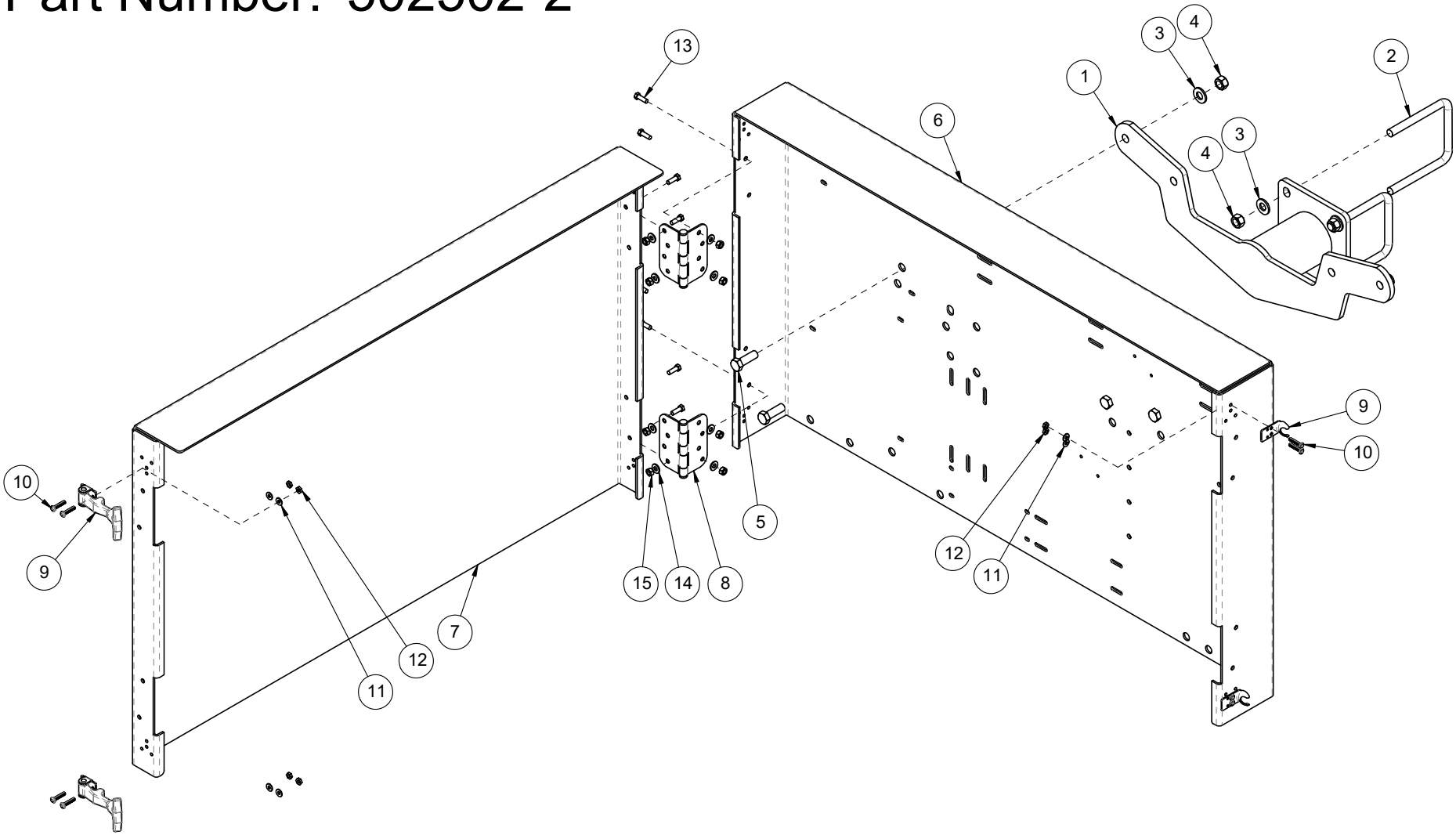

Axle - Single 800/65R32

Item	Qty.	Part No.	Description	Item	Qty.	Part No.	Description
1	2	255084	ASSY, TIRE - 800/65R32 DYNA TORQUE RADIAL - 172A8				
2	2	252004	ASSY, HUB/SPINDLE-H1020-4 1/2IN STRAIGHT SPINDLE				
3	1	501530	ASSY, REAR AXLE - NOVA - 520 BU - BLK				
4	2	250075	BOLT, HEX 1 X 9 UNC GR5 PL				
5	2	250505	NUT, LOCK - 1 UNC - STOVER - PL				
6	2	250554	WASHER, FLAT - 1 IN GR8 PL				
7	20	253036	NUT, WHEEL - 3/4 UNF FLANGE				
-	0	500141	BDL, REAR AXLE - NOVA - DUAL 800/65R32				

Axle - Single 800/65R32
Part Number: 500141

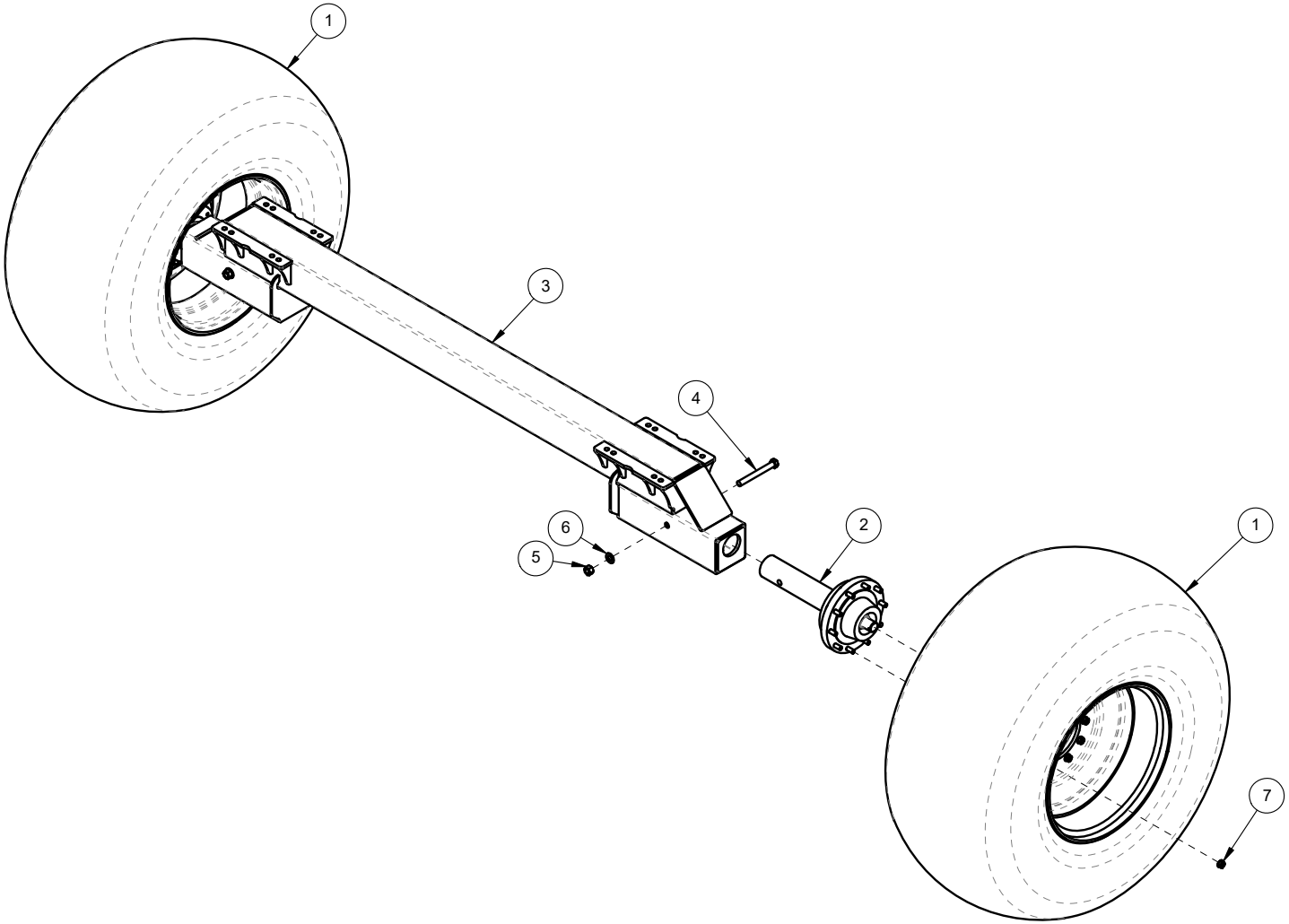

Axle - Dual 710/70R38

Item	Qty.	Part No.	Description	Item	Qty.	Part No.	Description
1	2	250075	BOLT, HEX 1 X 9 UNC GR5 PL				
2	2	250505	NUT, LOCK - 1 UNC - STOVER - PL				
3	2	250554	WASHER, FLAT - 1 IN GR8 PL				
4	2	252005	ASSY, HUB/SPINDLE - H1030 - 6 IN STRAIGHT SPINDLE				
5	20	253041	NUT, WHEEL - 7/8 UNF FLANGE				
6	4	255086-2	ASSY, TIRE - 710/70R38 - 177A8 R1W - DUAL RIM				
7	1	500130	ASSY, REAR AXLE - NOVA - BLK				
8	6	500144	PLATE, 3/4 IN - WHEEL CLAMP - 10 BOLT - PLATED				
-	0	500140	BDL, REAR AXLE - NOVA - DUAL 710/70R38				

Axle - Dual 710/70R38
Part Number:500140

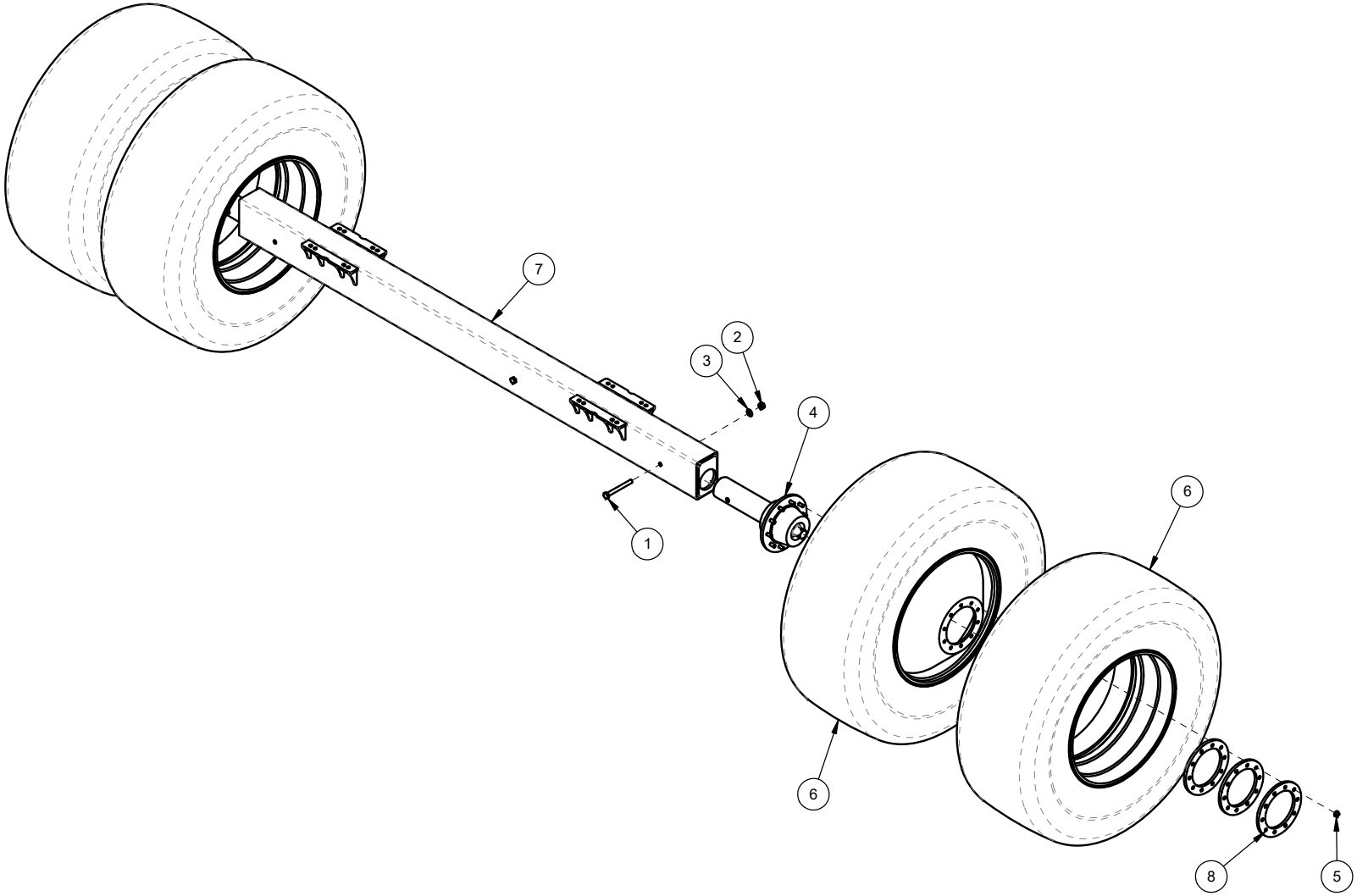

Clearance Lights

Item	Qty.	Part No.	Description	Item	Qty.	Part No.	Description
1	1	500310-2	ASSY, ADJUSTABLE MNT - CLEARANCE LIGHT - NOVA - BLK				
2	2	250013	BOLT, HEX 1/2 X 1 1/4 IN GR5 PL				
3	2	250213	BOLT, U-SQ - 1/2 UNC X 6ID X 5 1/2 IN - 2 IN THD - GR5 PL				
4	4	250555	WASHER, FLAT - 1/2 IN - GR8 - PL				
5	4	250450	NUT, HEX 1/2 UNC GR5 PL				
6	1	400177	WELD, EXTENSION - SIGNAL LIGHT - RIGHT - BLK				
7	1	400184	WELD, EXTENSION - SIGNAL LIGHT - LEFT - BLK				
8	1	257303	LAMP - CLEARANCE - AMBER LED				
9	1	500349	SHEET, FRMD 10 GA - CLAMP - TAIL LIGHT - NOVA - BLK				
10	1	500343	SHEET, FRMD 10 GA - BRACKET - TAIL LIGHT - NOVA - BLK				
11	1	257304	LAMP - CLEARANCE - RED LED				
12	4	250557	WASHER, FLAT - 3/8 IN GR8 PL				
13	2	250077	BOLT, HEX 3/8 X 2 1/2 IN GR5 PL				
14	2	250503	NUT, LOCK - 3/8 UNC - STOVER - PL				
15	2	250559	WASHER, FLAT - 1/4 IN PL				
16	1	250033	BOLT, HEX 1/4 X 1 IN GR5 PL				
17	1	250507	NUT, LOCK - 1/4 UNC - STOVER - PL				
-	0	400177	WELD, EXTENSION - SIGNAL LIGHT - RIGHT - BLK				
-	0	400184	WELD, EXTENSION - SIGNAL LIGHT - LEFT - BLK				

Clearance Lights
Part Number: 500315-1

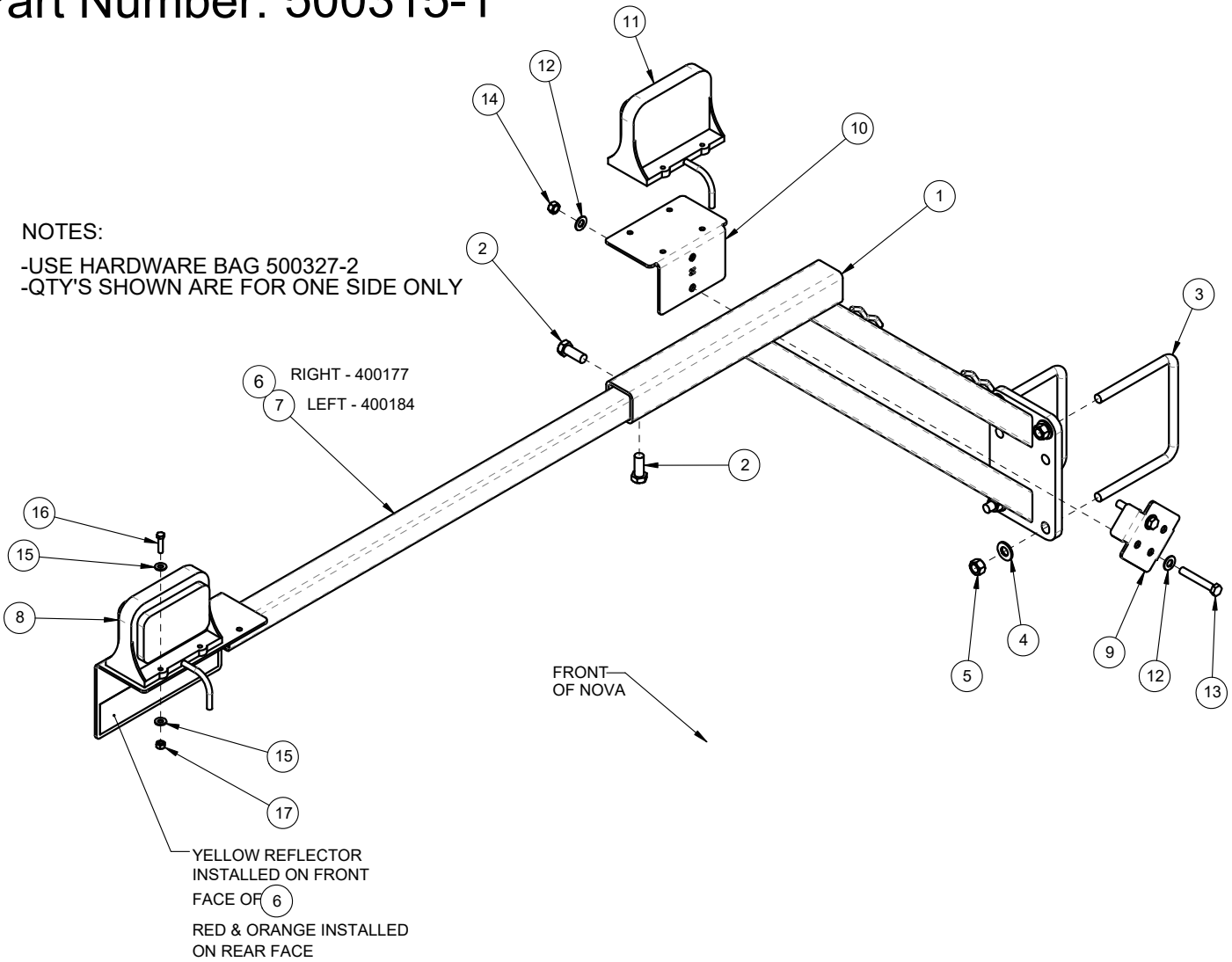

Rear Hitch - 520/780 Nova

Item	Qty.	Part No.	Description	Item	Qty.	Part No.	Description
1	1	501040-1	ASSY, REAR HITCH RH - 780BU NOVA - BLK				
2	1	501035-1	ASSY, REAR HITCH LH - 780BU NOVA - BLK				
3	1	501044	PLATE, BOLT 3/4 IN - 8 X 6 REAR HITCH				
4	2	400488-1	PLATE, SPACER 3/4 IN - REAR HITCH				
5	1	400489-1	PLATE, TOP 3/4 IN - REAR HITCH				
6	4	250003	BOLT, HEX 3/4 X 2 1/2 UNC GR5 PL				
7	4	250552	WASHER, FLAT 3/4IN GR8 PL				
8	4	250501	NUT, LOCK - 3/4 UNC - STOVER - GR.C - PL				
9	1	250553	WASHER, FLAT 7/8IN GR8 PL				
10	1	250502	NUT, LOCK - 7/8 UNC - STOVER - PL				
11	1	250008	BOLT, HEX 7/8 X 4 UNC GR5 PL				

Rear Hitch - 520/780 Nova
Part Number: 501001

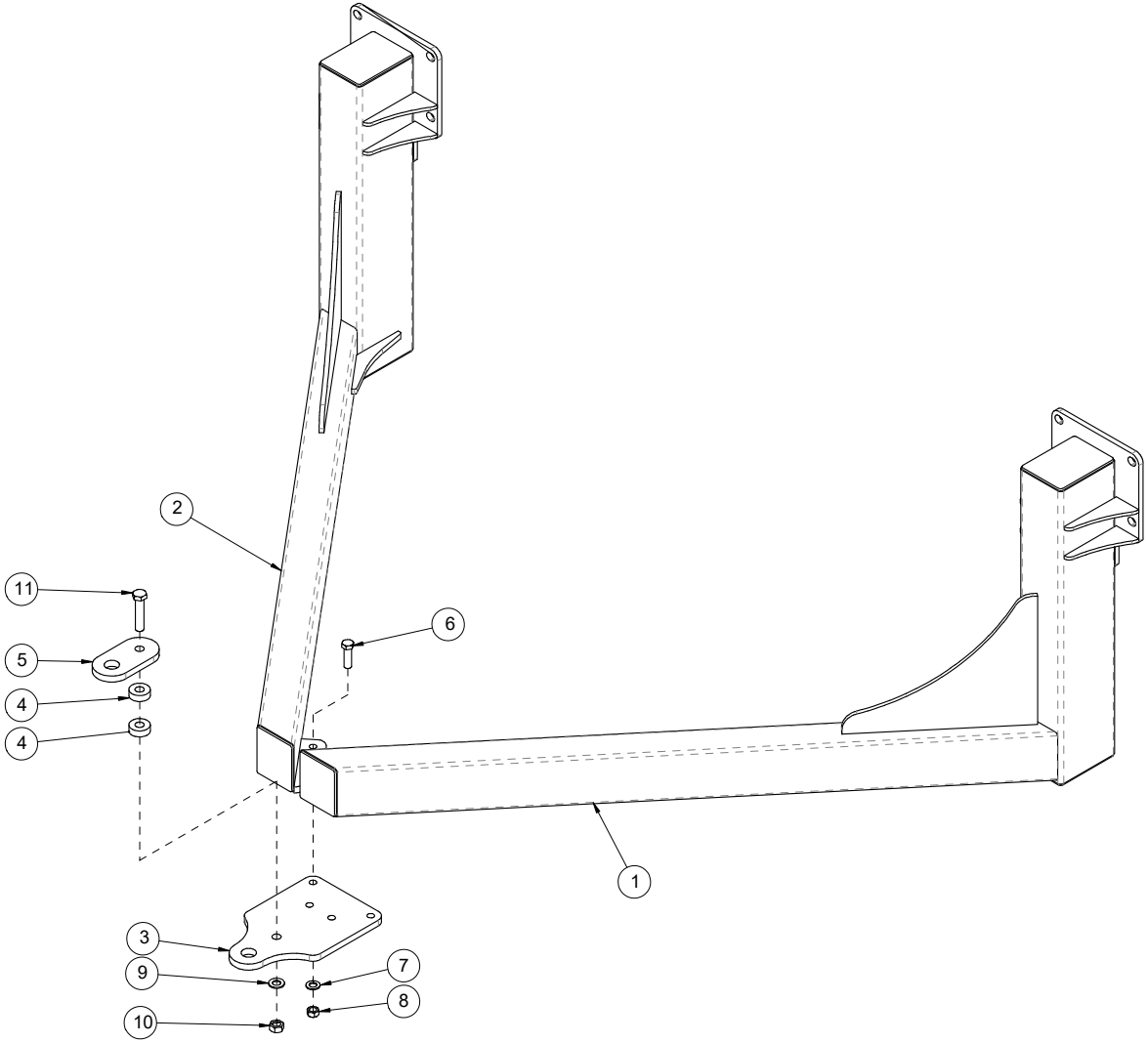

Rear Hitch - 560/820 Nova

Item	Qty.	Part No.	Description	Item	Qty.	Part No.	Description
1	1	501305	ASSY, FLOATING HITCH CROSS BRACE - NOVA				
2	2	501310	ASSY, FLOATING REAR HITCH - 820 NOVA				
3	1	501325	ASSY, FLOATING REAR HITCH - ANG. CROSS BEAM				
4	1	501330	ASSY, FLOATING REAR HITCH TONGUE				
5	2	501340	PLATE, GUIDE 5/8 IN - NOVA REAR FLOATING HITCH				
6	2	501341-1	PLATE, FRMD 3/8 IN - FLOATING REAR HITCH GUIDE RETAINING PLATE				
7	8	250004	BOLT, HEX 3/4 X 2 3/4 UNC GR5 PL				
8	24	250552	WASHER, FLAT 3/4IN GR8 PL				
9	24	250451	NUT, HEX 3/4 UNC GR5 PL				
10	8	250201	BOLT, U-SQ - 3/4 UNC X 4 ID X 6 IN - 2 IN THD - GR5 PL				
11	2	250223	BOLT, U-SQ - 1/2 UNC X 4 ID X 6 IN - 2 IN THD - GR5 PL				
12	4	250555	WASHER, FLAT - 1/2 IN - GR8 - PL				
13	4	250450	NUT, HEX 1/2 UNC GR5 PL				
14	2	250032	BOLT, HEX 1 X 4 IN UNC GR5 PL				
15	4	250554	WASHER, FLAT - 1 IN GR8 PL				
16	4	250505	NUT, LOCK - 1 UNC - STOVER - PL				
17	2	250031	BOLT, HEX 1 X 3 1/2 IN GR5 PL				

Rear Hitch - 560/820 Nova
Part Number: 501300

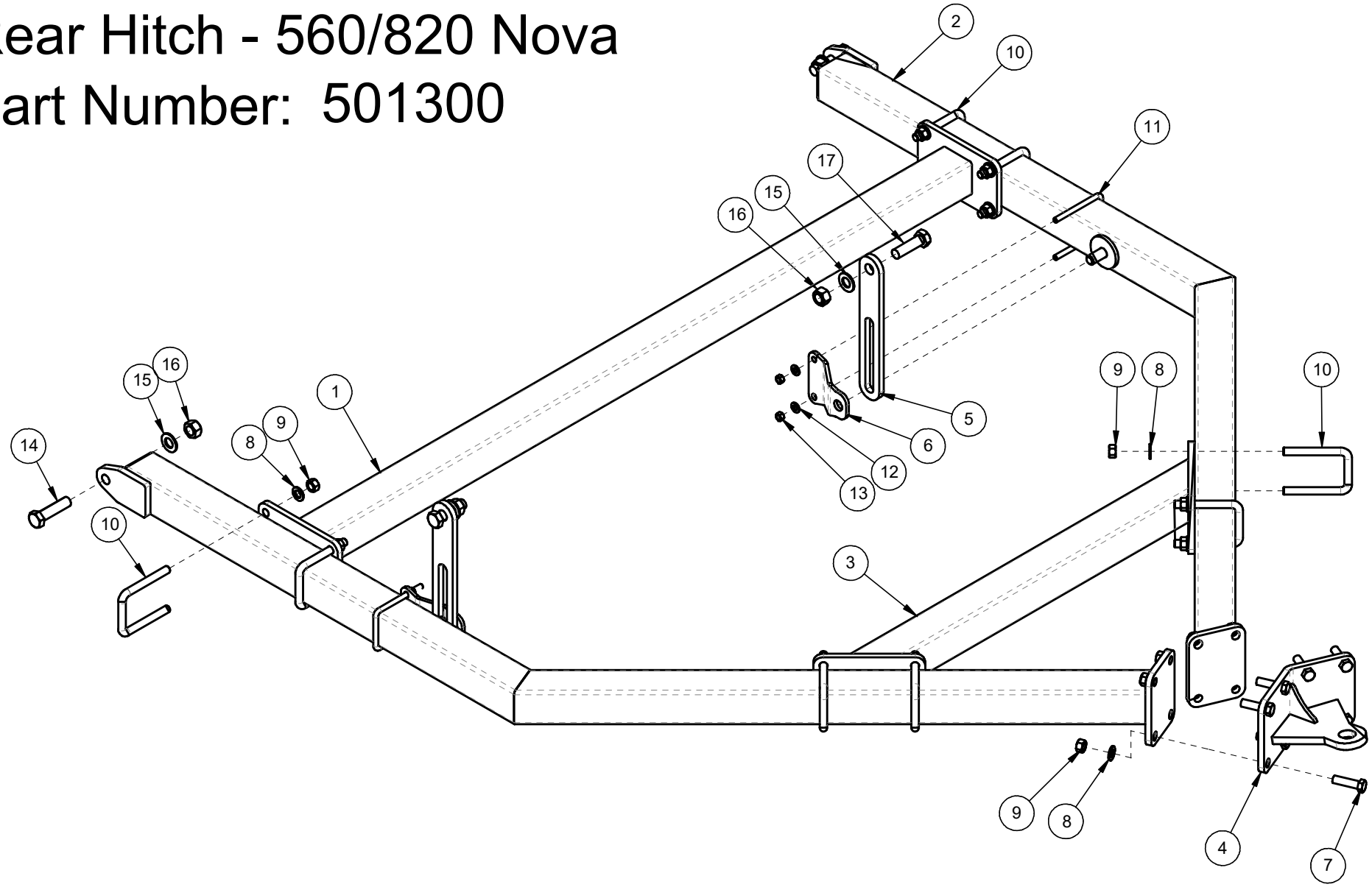

Rear Hitch - Tow Between Nova

Item	Qty.	Part No.	Description	Item	Qty.	Part No.	Description
1	1	503320-4	ASSY, MAIN BEAM - REAR HITCH - T/B NOVA - BLK				
2	1	503335	ASSY, REAR CLEVIS - T/B NOVA - BLK				
3	1	503340	ASSY, CLAMP PLATE - REAR CLEVIS - T/B NOVA - BLK				
4	10	250112	BOLT, HEX 3/4 X 13 UNC GR5 PL				
5	4	250550	WASHER, FLAT 5/8 IN GR8 PL				
6	4	250047	BOLT, HEX 5/8 X 2 UNC GR5 PL				
7	4	250455	NUT, HEX 5/8 UNC GR5 PL				
8	8	250044	BOLT, HEX 7/8 X 3 IN UNC GR5 PL				
9	8	250452	NUT, HEX - 7/8 UNC PL				
10	8	250553	WASHER, FLAT 7/8IN GR8 PL				
11	42	250451	NUT, HEX 3/4 UNC GR5 PL				
12	60	250552	WASHER, FLAT 3/4IN GR8 PL				
13	12	250004	BOLT, HEX 3/4 X 2 3/4 UNC GR5 PL				
14	1	250627	HAIRPIN, 1/4 X 5 IN - HITCH PIN				
15	12	250003	BOLT, HEX 3/4 X 2 1/2 UNC GR5 PL				
16	8	250014	BOLT, HEX 3/4 X 2 UNC GR5 PL				
17	1	503315-1	ASSY, REAR HITCH PIN - T/B NOVA - BLK				
18	1	503755-1	ASSY, QUICK COUPLING - T/B NOVA - BLK				
19	1	503390	ASSY, RIGHT BEAM - REAR HITCH - T/B NOVA - BLK				
20	1	503395	ASSY, LEFT BEAM - REAR HITCH - T/B NOVA - BLK				

Rear Hitch - Tow Between Nova
Part Number: 501310-2

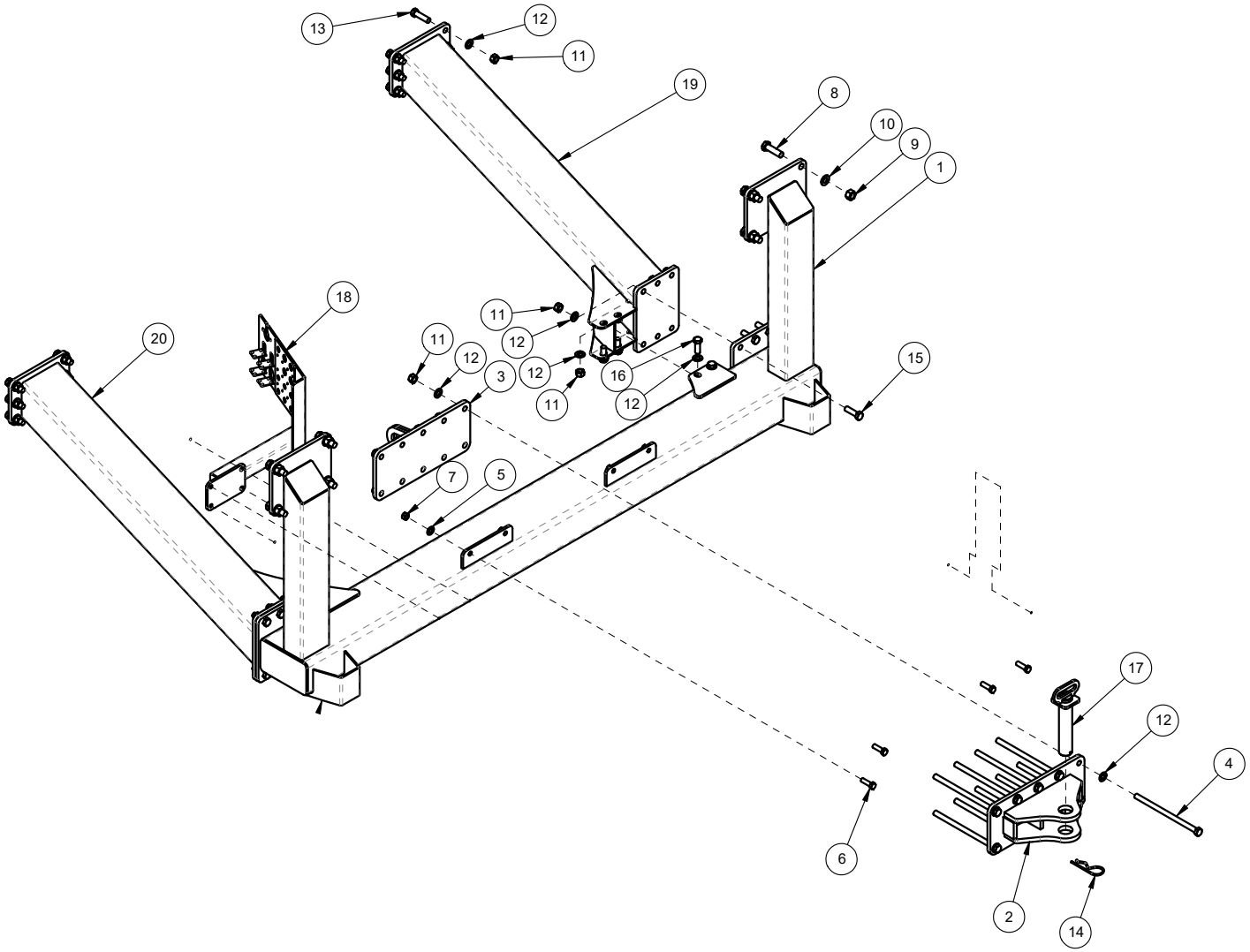

Meter Box - Standard Tank

Item	Qty.	Part No.	Description
1	6	250109	BOLT, CARRIAGE - 3/8 X 1 1/4 IN UNC - STAINLESS
2	4	250464	NUT, HEX - 3/8 UNC GR5 JS500
3	6	250569	WASHER, FLAT - 3/8 IN SS
4	4	256579	CELLTITE SPONGE - 1/4 X 3/4 IN
5	6	250172	NUT, LOCK - 1/4 UNC 18.8 SS
6	2	250643-1	BUSHING, NOVA METER - 5/8 HEX - J4
7	14	250568	WASHER, FLAT - 1/4 IN SS
8	2	250645	RETAINING RING, E-TYPE 5/8 IN - STAINLESS STEEL
9	2	250169	BOLT, CARRIAGE - 1/4 X 3/4 UNC 18.8 S.S.
10	1	501911	ASSY, GEAR - INTERMEDIATE - NOVA METER
11	1	501913	ASSY, HOUSING - PIVOT ARM BEARING - NOVA METER
12	1	501916	ASSY, GEAR - IDLER - NOVA METER
13	1	501914	PLATE, FRMD 1/4 - GEAR CONTROL ARM - NOVA METER - S.S.
14	1	501919	SPACER, PIVOT ARM - NOVA METER - SS
15	4	250474	BOLT, SHCS - 1/4 - 20 X 1/2 - PL
16	1	250476	BOLT, HEX - 1/2 X 1 1/2" - UNC - S.S.
17	4	250478	SHIM, 1/2" ID X 3/4 OD X 0.125 THICK - SS
18	1	250477	NUT, LOCK - 1/2 UNC - THIN - PL
19	1	501920	ASSY, METER ROLLER - NOVA RETROFIT
20	2	501924	HOUSING, METER BUSHING - SS
21	2	250479	O-RING, 2-327 - BUNA-N - X-PROFILE
22	2	250665	WASHER, THRUST 1.57 OD X 1.03 ID X 0.038 T - SHIM IGUS M250
23	1	500455-6	ASSY, METER HOUSING - S.S. - NOVA
24	1	400965	IDLER, BUSHING - CHAIN - 75D - 1 1/2OD X 7/16 ID X 2
25	1	250072	BOLT, HEX 3/8 X 3 IN GR5 PL
26	1	250503	NUT, LOCK - 3/8 UNC - STOVER - PL
27	1	260521	ELBOW, 90D - 1/8 NPT M X 1/4IN PUSH ON - AIR - STAINLESS
28	1	250641-1	SHAFT, 5/8 HEX - NOVA METER ROLLER SHAFT
29	2	500487	SHEET, BUSHING HOUSING CLAMP 10GA - STAINLESS
30	1	500493	SHEET, 20GA - NOVA METER HEX SHIM - SS
31	1	500484-1	SHEET, FRMD10 GA - CLEAN OUT - STAINLESS - NOVA
32	1	501891-1	GEAR, METER ROLLER - 27T - 5/8 IN HEX BORE
33	1	260572	CYL, AIR - 1 X 1 - PARKER - 1.06DPSRS X 1.00 - C/W WIPER
34	1	260506	CLEVIS, ROD - AIR CYLINDER - IGUS GERI-05
35	1	260507	CLEVIS PIN, AIR CYLINDER - IGUS GEFM-08
36	1	250680	RETAINING RING, E-TYPE 1/4 IN - STAINLESS STEEL
37	2	500438-1	PLATE, 5/16 IN S.S. - ROLLER CLEANOUT
38	2	250531	NUT, WING - 3/8 UNC - STAINLESS
39	1	501930	SHEET, 10 GA - RETAINER WASHER - INTERMEDIATE GEAR - SS
40	1	250170	BOLT, HEX 1/4 X 1/2 IN UNC 18.8 SS
41	1	501931	GASKET, FOAM - 1/4 IN - CLEAN OUT - NOVA

Meter Box - Standard Tank
Part Number: 500450-5

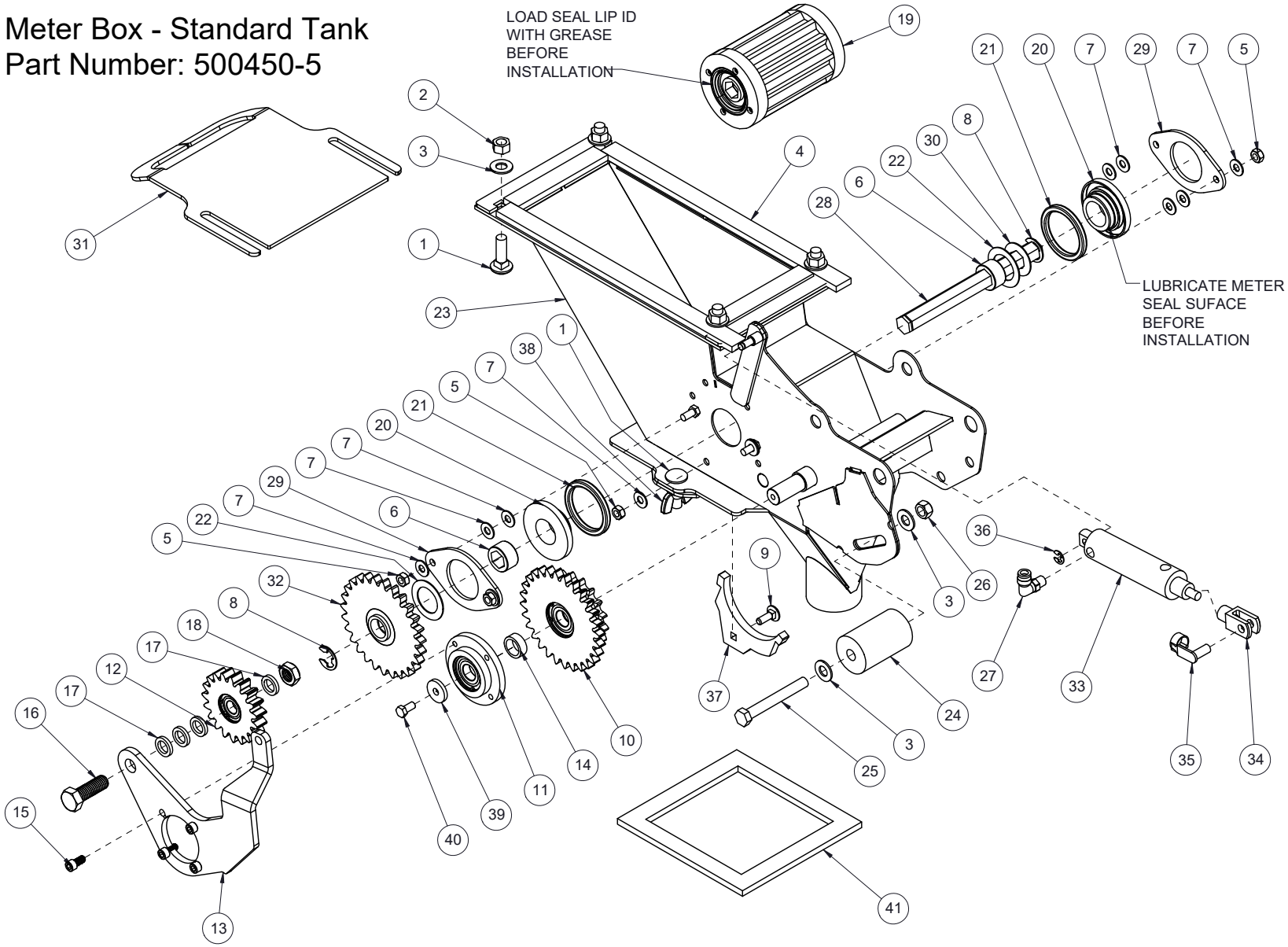

Meter Box - Canola Tank

Item	Qty.	Part No.	Description
1	6	250109	BOLT, CARRIAGE - 3/8 X 1 1/4 IN UNC - STAINLESS
2	4	250464	NUT, HEX - 3/8 UNC GR5 JS500
3	6	250569	WASHER, FLAT - 3/8 IN SS
4	4	256579	CELLTITE SPONGE - 1/4 X 3/4 IN
5	6	250172	NUT, LOCK - 1/4 UNC 18.8 SS
6	2	250643-1	BUSHING, NOVA METER - 5/8 HEX - J4
7	14	250568	WASHER, FLAT - 1/4 IN SS
8	2	250645	RETAINING RING, E-TYPE 5/8 IN - STAINLESS STEEL
9	2	250169	BOLT, CARRIAGE - 1/4 X 3/4 UNC 18.8 S.S.
10	1	501911	ASSY, GEAR - INTERMEDIATE - NOVA METER
11	1	501913	ASSY, HOUSING - PIVOT ARM BEARING - NOVA METER
12	1	501916	ASSY, GEAR - IDLER - NOVA METER
13	1	501914	PLATE, FRMD 1/4 - GEAR CONTROL ARM - NOVA METER - S.S.
14	1	501919	SPACER, PIVOT ARM - NOVA METER - SS
15	4	250474	BOLT, SHCS - 1/4 - 20 X 1/2 - PL
16	1	250476	BOLT, HEX - 1/2 X 1 1/2" - UNC - S.S.
17	4	250478	SHIM, 1/2" ID X 3/4 OD X 0.125 THICK - SS
18	1	250477	NUT, LOCK - 1/2 UNC - THIN - PL
19	1	501927	ASSY, METER ROLLER - LOW RATE - NOVA RETROFIT
20	2	501924	HOUSING, METER BUSHING - SS
21	2	250479	O-RING, 2-327 - BUNA-N - X-PROFILE
22	2	250665	WASHER, THRUST 1.57 OD X 1.03 ID X 0.038 T - SHIM IGUS M250
23	1	501930	SHEET, 10 GA - RETAINER WASHER - INTERMEDIATE GEAR - SS
24	1	250170	BOLT, HEX 1/4 X 1/2 IN UNC 18.8 SS
25	1	500455-6	ASSY, METER HOUSING - S.S. - NOVA
26	1	400965	IDLER, BUSHING - CHAIN - 75D - 1 1/2OD X 7/16 ID X 2
27	1	250072	BOLT, HEX 3/8 X 3 IN GR5 PL
28	1	250503	NUT, LOCK - 3/8 UNC - STOVER - PL
29	1	260521	ELBOW, 90D - 1/8 NPT M X 1/4IN PUSH ON - AIR - STAINLESS
30	1	250641-1	SHAFT, 5/8 HEX - NOVA METER ROLLER SHAFT
31	2	500487	SHEET, BUSHING HOUSING CLAMP 10GA - STAINLESS
32	1	500493	SHEET, 20GA - NOVA METER HEX SHIM - SS
33	1	500484-1	SHEET, FRMD10 GA - CLEAN OUT - STAINLESS - NOVA
34	1	501891-1	GEAR, METER ROLLER - 27T - 5/8 IN HEX BORE
35	1	260572	CYL, AIR - 1 X 1 - PARKER - 1.06DPSRS X 1.00 - C/W WIPER
36	1	260506	CLEVIS, ROD - AIR CYLINDER - IGUS GERI-05
37	1	260507	CLEVIS PIN, AIR CYLINDER - IGUS GEFM-08
38	1	250680	RETAINING RING, E-TYPE 1/4 IN - STAINLESS STEEL
39	2	500438-1	PLATE, 5/16 IN S.S. - ROLLER CLEANOUT
40	2	250531	NUT, WING - 3/8 UNC - STAINLESS
41	1	501931	GASKET, FOAM - 1/4 IN - CLEAN OUT - NOVA

Meter Box - Canola Tank
Part Number: 500451-5

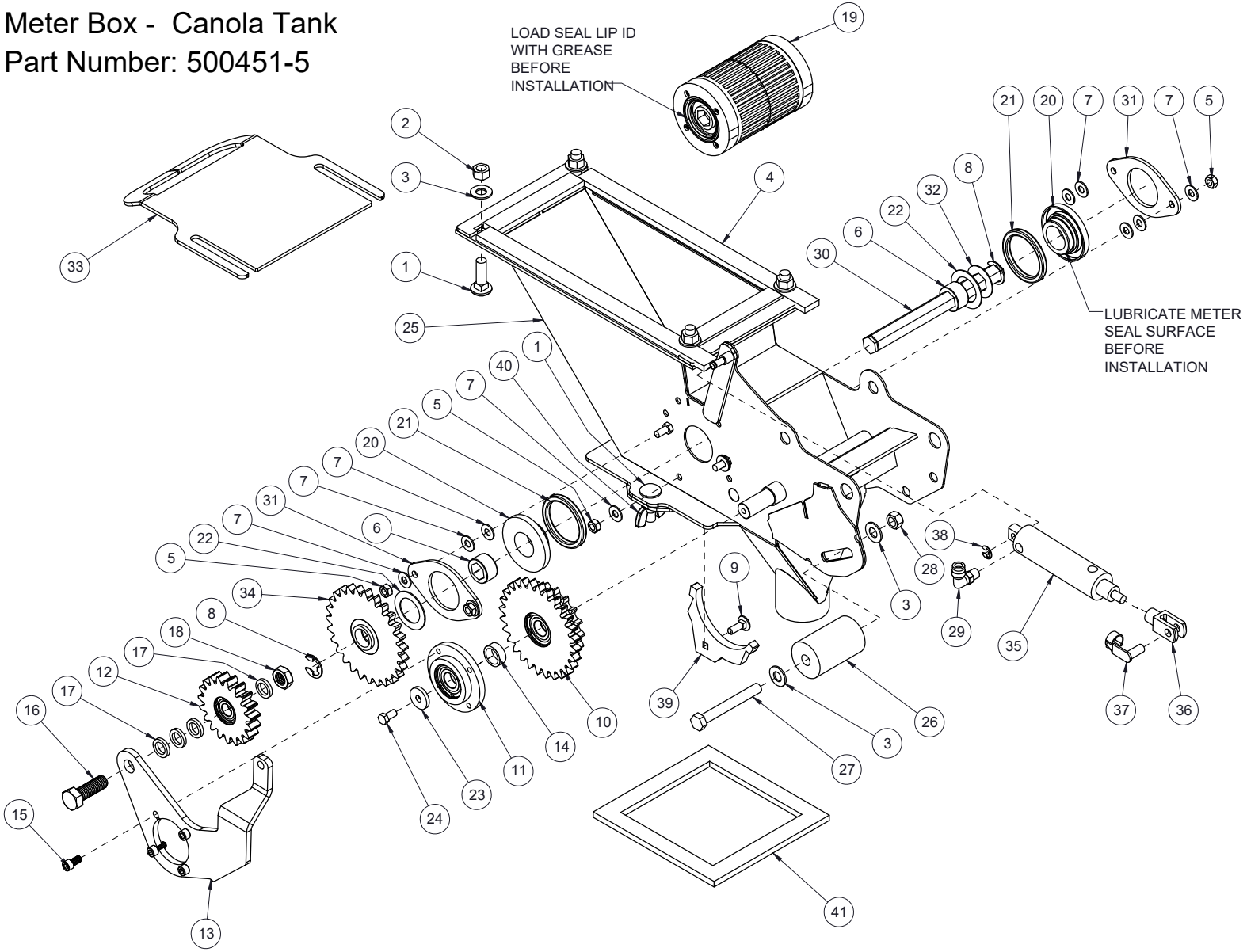

Common Drive Shaft

Item	Qty.	Part No.	Description	Item	Qty.	Part No.	Description
1	1	503287	SFT, DRIVE - HEX - 5/8 X 87 IN - STAINLESS - NOVA - HOLES				
2	10	250019	BOLT, HEX 3/8 X 1 1/4 IN GR5 PL				
3	10	250453	NUT, HEX - 3/8 UNC PL				
4	10	250557	WASHER, FLAT - 3/8 IN GR8 PL				
5	10	250630	SCREW, SET - 1/4 X 3/8 UNC				
6	1	500410-2	ASSY, NOVA END METER BEARING PLATE				
7	1	500494-3	ASSY, MOTOR MOUNT SUPPORT - STAINLESS - NOVA				
8	10	501892-1	ASSY, HUB - COMPLETE COMMON DRIVE - NOVA METER - PLATED - ZN				
9	1	250122	BOLT, HEX 1/4 X 3/4 IN GR5 PL				
10	1	250458	NUT, HEX - 1/4 UNC PL				
11	1	250559	WASHER, FLAT - 1/4 IN PL				
12	7	250643-1	BUSHING, NOVA METER - 5/8 HEX - J4				
13	14	250682	COLLAR, SFT 3/4 IN - SET SCREW - PL				
14	5	500498	ASSY, BEARING HOLDER 10GA - STAINLESS				
15	5	500483	SHEET, SPACER 10GA - BEARING HOLDER - STAINLESS				
16	14	250685	WASHER, THRUST 1.42 OD X 0.79 ID X .060 - IGUS JTM-2036-015				

Common Drive Shaft

Part Number: 503289 - 10 Zone
503286 - 08 Zone

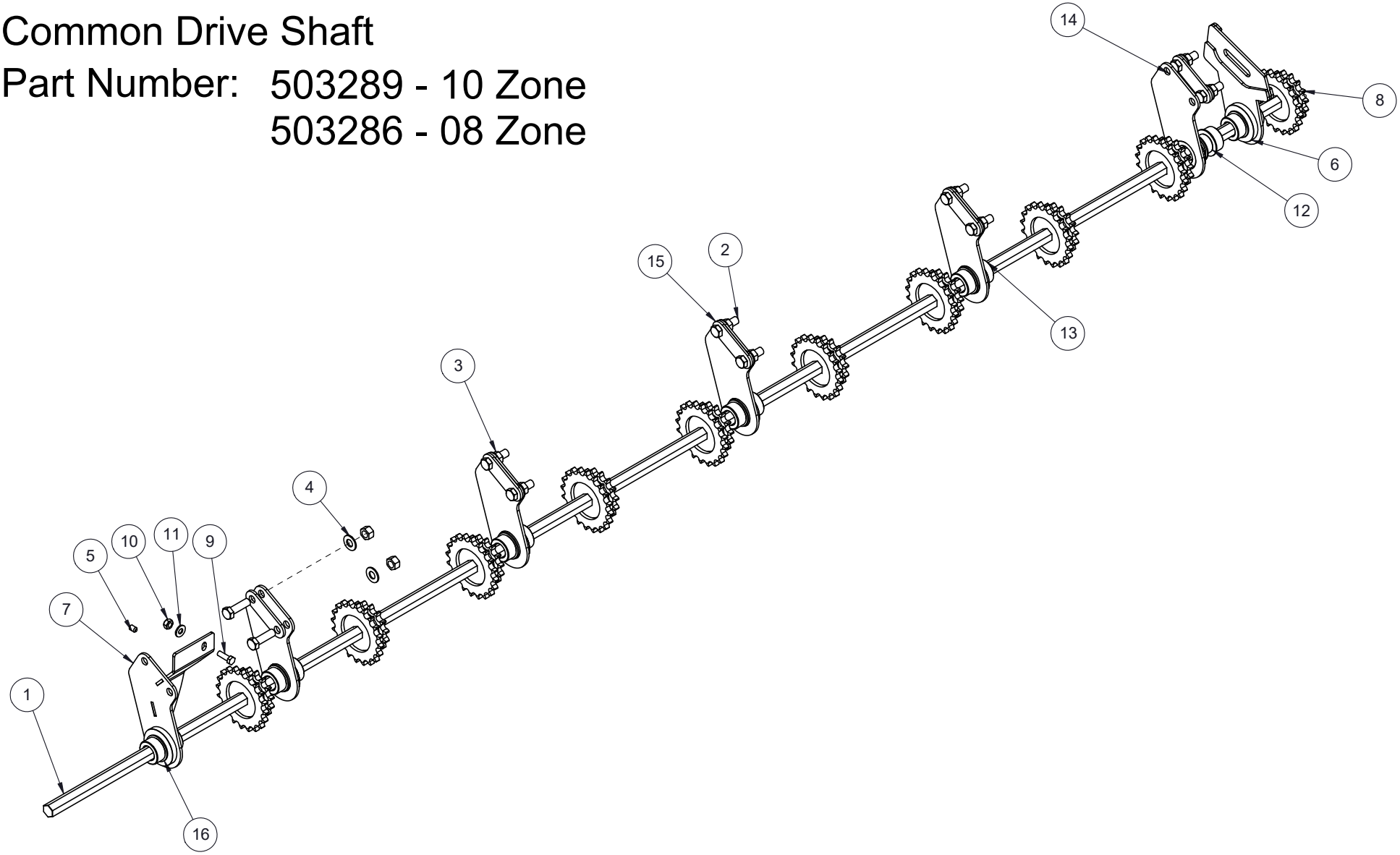

Standard Gear Reduction Drive

Item	Qty.	Part No.	Description
1	1	503977	WELD, STANDARD METER DRIVE - NOVA SERIES II
2	1	260717	MOTOR, HYD - OMNISEED - 7/8 HEX - RAVEN
3	1	503861-1	SHAFT, 1IN - PRIMARY - METER DRIVE - NOVA SERIES II
4	4	250872	BEARING, FLANGE - NOVA SERIES II - 1" SFT - UCFL205-100D1
5	1	503862-1	SHAFT, 1IN - SECONDARY - METER DRIVE - NOVA SERIES II
6	1	503863	PIPE, IDLER SPACER 1 - NOVA SERIES II
7	1	503864-1	PIPE, IDLER SPACER 2 - NOVA SERIES II
8	2	250001	BOLT, HEX 1/2 X 1 1/2 IN GR5 PL
9	8	250555	WASHER, FLAT - 1/2 IN - GR8 - PL
10	7	250504	NUT, LOCK - 1/2 UNC - STOVER - PL
11	2	250077	BOLT, HEX 3/8 X 2 1/2 IN GR5 PL
12	6	250557	WASHER, FLAT - 3/8 IN GR8 PL
13	5	250562	WASHER, FLAT 5/8 IN PL
14	1	250150	BOLT, HEX 5/8 X 8 UNC GR5 PL
15	2	250503	NUT, LOCK - 3/8 UNC - STOVER - PL
16	7	250500	NUT, LOCK 5/8 UNC - STOVER - PL
17	3	250048	BOLT, HEX 1/2 X 2 IN GR5 PL
18	2	250013	BOLT, HEX 1/2 X 1 1/4 IN GR5 PL
19	2	250019	BOLT, HEX 3/8 X 1 1/4 IN GR5 PL
20	2	250453	NUT, HEX - 3/8 UNC PL
21	2	250559	WASHER, FLAT - 1/4 IN PL
22	2	503888	SPROCKET, IDLER - 40T18 - 5/8 ID - NOVA SERIES II
23	2	503865	KEY, 1/4 X 1/4 X 2-1/16 IN
24	1	402948	KEY, 1/4 X 1/4 X 1 1/2 IN
25	1	503866	GEAR, DRIVE SHAFT - 20T - NOVA SERIES II
26	1	503867	GEAR, DRIVE SHAFT - 40T - NOVA SERIES II
27	1	503868-1	PIPE, IDLER SPACER 3 - NOVA SERIES II
28	1	503871-1	PLATE, 1/4 IN - MOTOR MOUNT - CHAIN REDUCTION - NOVA SERIES II
29	1	503893-2	WELD, COMMON DRIVE SUPPORT - CHAIN REDUCTION - NOVA SERIES II
30	1	503959	ADAPTOR, 5/8 IN HEX TO 1 IN BORE - CHAIN REDUCTION
31	1	503869	SPROCKET, DUAL - 15 AND 15 TOOTH - NOVA SERIES II
32	1	503881	WELD, SPROCKET - 40T15 AND 40T28 - 5/8 IN HEX BORE
33	1	250682	COLLAR, SFT 3/4 IN - SET SCREW - PL
34	6	250740	SCREW, SET - 5/16 X 3/8 IN UNC PL
35	1	250630	SCREW, SET - 1/4 X 3/8 UNC
36	1	260874	VALVE, PWM - OMNISEED - C/W MANIFOLD - MAN. O/R
37	2	250081	BOLT, HEX 1/4 X 1 3/4 IN - GR5 PL
38	2	250458	NUT, HEX - 1/4 UNC PL
39	6	222514	BOLT, HEX - 5/8 X 1 3/4 IN UNF GR8 PL
40	1	503898	WELD, NOVA METER REDUCTION - PWM MOUNT
41	6	250550	WASHER, FLAT 5/8 IN GR8 PL

Standard Gear Reduction Drive
Part Number: 503850-1

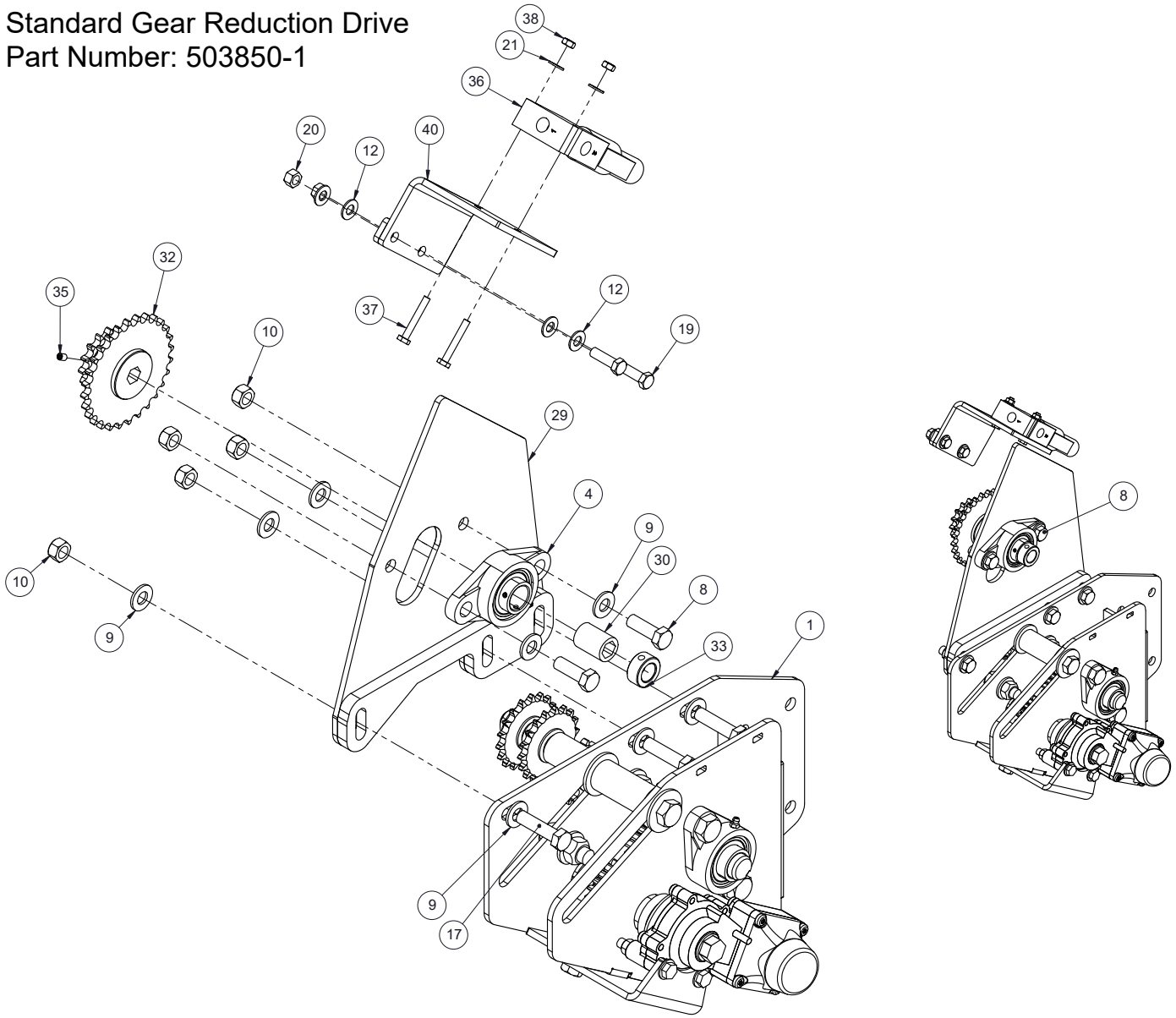

Standard Gear Reduction Drive

Item	Qty.	Part No.	Description
1	1	503977	WELD, STANDARD METER DRIVE - NOVA SERIES II
2	1	260717	MOTOR, HYD - OMNISEED - 7/8 HEX - RAVEN
3	1	503861-1	SHAFT, 1IN - PRIMARY - METER DRIVE - NOVA SERIES II
4	4	250872	BEARING, FLANGE - NOVA SERIES II - 1" SFT - UCFL205-100D1
5	1	503862-1	SHAFT, 1IN - SECONDARY - METER DRIVE - NOVA SERIES II
6	1	503863	PIPE, IDLER SPACER 1 - NOVA SERIES II
7	1	503864-1	PIPE, IDLER SPACER 2 - NOVA SERIES II
8	2	250001	BOLT, HEX 1/2 X 1 1/2 IN GR5 PL
9	8	250555	WASHER, FLAT - 1/2 IN - GR8 - PL
10	7	250504	NUT, LOCK - 1/2 UNC - STOVER - PL
11	2	250077	BOLT, HEX 3/8 X 2 1/2 IN GR5 PL
12	6	250557	WASHER, FLAT - 3/8 IN GR8 PL
13	5	250562	WASHER, FLAT 5/8 IN PL
14	1	250150	BOLT, HEX 5/8 X 8 UNC GR5 PL
15	2	250503	NUT, LOCK - 3/8 UNC - STOVER - PL
16	7	250500	NUT, LOCK 5/8 UNC - STOVER - PL
17	3	250048	BOLT, HEX 1/2 X 2 IN GR5 PL
18	2	250013	BOLT, HEX 1/2 X 1 1/4 IN GR5 PL
19	2	250019	BOLT, HEX 3/8 X 1 1/4 IN GR5 PL
20	2	250453	NUT, HEX - 3/8 UNC PL
21	2	250559	WASHER, FLAT - 1/4 IN PL
22	2	503888	SPROCKET, IDLER - 40T18 - 5/8 ID - NOVA SERIES II
23	2	503865	KEY, 1/4 X 1/4 X 2-1/16 IN
24	1	402948	KEY, 1/4 X 1/4 X 1 1/2 IN
25	1	503866	GEAR, DRIVE SHAFT - 20T - NOVA SERIES II
26	1	503867	GEAR, DRIVE SHAFT - 40T - NOVA SERIES II
27	1	503868-1	PIPE, IDLER SPACER 3 - NOVA SERIES II
28	1	503871-1	PLATE, 1/4 IN - MOTOR MOUNT - CHAIN REDUCTION - NOVA SERIES II
29	1	503893-2	WELD, COMMON DRIVE SUPPORT - CHAIN REDUCTION - NOVA SERIES II
30	1	503959	ADAPTOR, 5/8 IN HEX TO 1 IN BORE - CHAIN REDUCTION
31	1	503869	SPROCKET, DUAL - 15 AND 15 TOOTH - NOVA SERIES II
32	1	503881	WELD, SPROCKET - 40T15 AND 40T28 - 5/8 IN HEX BORE
33	1	250682	COLLAR, SFT 3/4 IN - SET SCREW - PL
34	6	250740	SCREW, SET - 5/16 X 3/8 IN UNC PL
35	1	250630	SCREW, SET - 1/4 X 3/8 UNC
36	1	260874	VALVE, PWM - OMNISEED - C/W MANIFOLD - MAN. O/R
37	2	250081	BOLT, HEX 1/4 X 1 3/4 IN - GR5 PL
38	2	250458	NUT, HEX - 1/4 UNC PL
39	6	222514	BOLT, HEX - 5/8 X 1 3/4 IN UNF GR8 PL
40	1	503898	WELD, NOVA METER REDUCTION - PWM MOUNT
41	6	250550	WASHER, FLAT 5/8 IN GR8 PL

Standard Gear Reduction Drive
Part Number: 503850-1

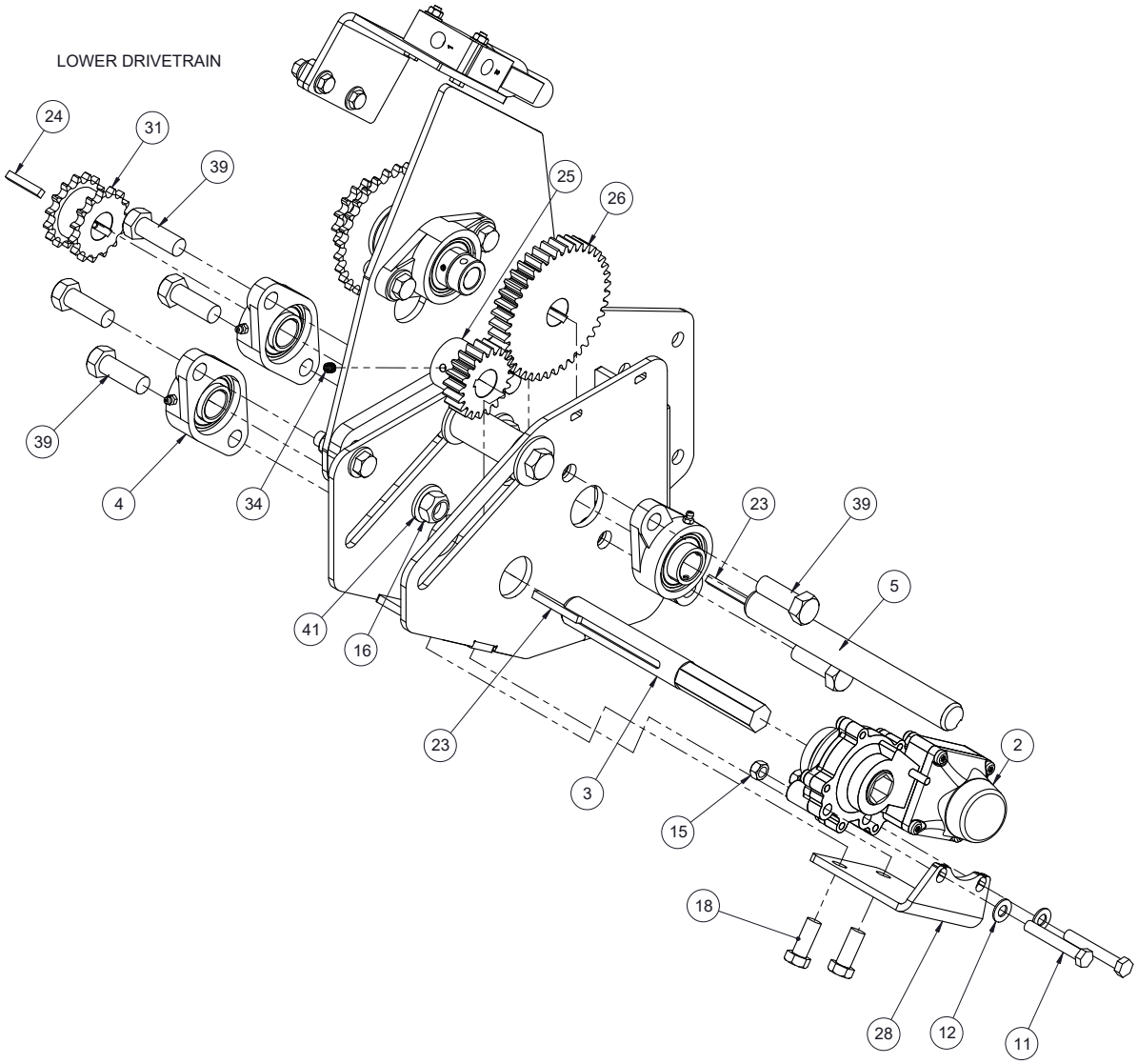

Standard Gear Reduction Drive

Item	Qty.	Part No.	Description
1	1	503977	WELD, STANDARD METER DRIVE - NOVA SERIES II
2	1	260717	MOTOR, HYD - OMNISEED - 7/8 HEX - RAVEN
3	1	503861-1	SHAFT, 1IN - PRIMARY - METER DRIVE - NOVA SERIES II
4	4	250872	BEARING, FLANGE - NOVA SERIES II - 1" SFT - UCFL205-100D1
5	1	503862-1	SHAFT, 1IN - SECONDARY - METER DRIVE - NOVA SERIES II
6	1	503863	PIPE, IDLER SPACER 1 - NOVA SERIES II
7	1	503864-1	PIPE, IDLER SPACER 2 - NOVA SERIES II
8	2	250001	BOLT, HEX 1/2 X 1 1/2 IN GR5 PL
9	8	250555	WASHER, FLAT - 1/2 IN - GR8 - PL
10	7	250504	NUT, LOCK - 1/2 UNC - STOVER - PL
11	2	250077	BOLT, HEX 3/8 X 2 1/2 IN GR5 PL
12	6	250557	WASHER, FLAT - 3/8 IN GR8 PL
13	5	250562	WASHER, FLAT 5/8 IN PL
14	1	250150	BOLT, HEX 5/8 X 8 UNC GR5 PL
15	2	250503	NUT, LOCK - 3/8 UNC - STOVER - PL
16	7	250500	NUT, LOCK 5/8 UNC - STOVER - PL
17	3	250048	BOLT, HEX 1/2 X 2 IN GR5 PL
18	2	250013	BOLT, HEX 1/2 X 1 1/4 IN GR5 PL
19	2	250019	BOLT, HEX 3/8 X 1 1/4 IN GR5 PL
20	2	250453	NUT, HEX - 3/8 UNC PL
21	2	250559	WASHER, FLAT - 1/4 IN PL
22	2	503888	SPROCKET, IDLER - 40T18 - 5/8 ID - NOVA SERIES II
23	2	503865	KEY, 1/4 X 1/4 X 2-1/16 IN
24	1	402948	KEY, 1/4 X 1/4 X 1 1/2 IN
25	1	503866	GEAR, DRIVE SHAFT - 20T - NOVA SERIES II
26	1	503867	GEAR, DRIVE SHAFT - 40T - NOVA SERIES II
27	1	503868-1	PIPE, IDLER SPACER 3 - NOVA SERIES II
28	1	503871-1	PLATE, 1/4 IN - MOTOR MOUNT - CHAIN REDUCTION - NOVA SERIES II
29	1	503893-2	WELD, COMMON DRIVE SUPPORT - CHAIN REDUCTION - NOVA SERIES II
30	1	503959	ADAPTOR, 5/8 IN HEX TO 1 IN BORE - CHAIN REDUCTION
31	1	503869	SPROCKET, DUAL - 15 AND 15 TOOTH - NOVA SERIES II
32	1	503881	WELD, SPROCKET - 40T15 AND 40T28 - 5/8 IN HEX BORE
33	1	250682	COLLAR, SFT 3/4 IN - SET SCREW - PL
34	6	250740	SCREW, SET - 5/16 X 3/8 IN UNC PL
35	1	250630	SCREW, SET - 1/4 X 3/8 UNC
36	1	260874	VALVE, PWM - OMNISEED - C/W MANIFOLD - MAN. O/R
37	2	250081	BOLT, HEX 1/4 X 1 3/4 IN - GR5 PL
38	2	250458	NUT, HEX - 1/4 UNC PL
39	6	222514	BOLT, HEX - 5/8 X 1 3/4 IN UNF GR8 PL
40	1	503898	WELD, NOVA METER REDUCTION - PWM MOUNT
41	6	250550	WASHER, FLAT 5/8 IN GR8 PL

Standard Gear Reduction Drive
Part Number: 503850-1

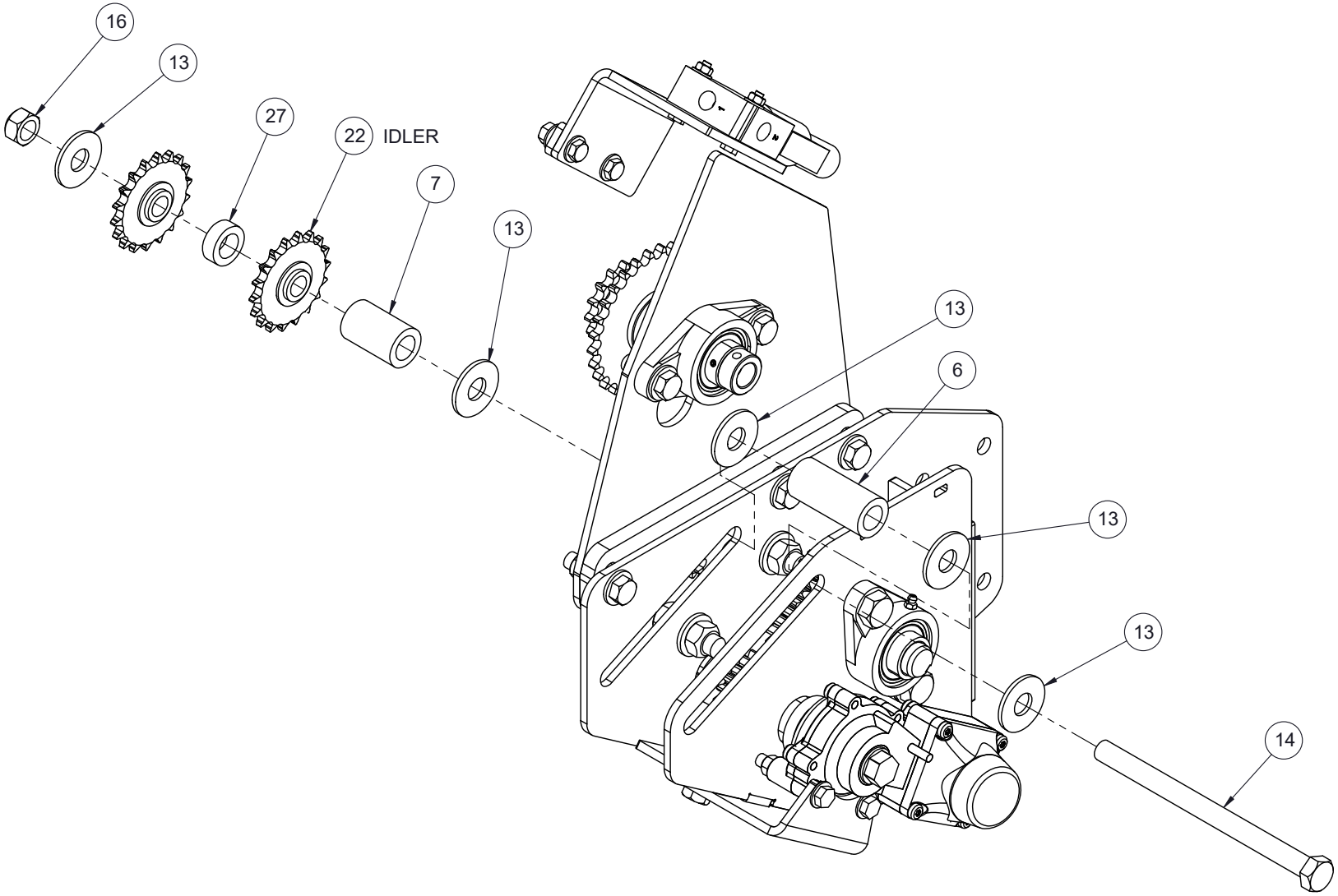

Tow-Between Gear Reduction Drive

Item	Qty.	Part No.	Description
1	1	503977	WELD, STANDARD METER DRIVE - NOVA SERIES II
2	1	260717	MOTOR, HYD - OMNISEED - 7/8 HEX - RAVEN
3	1	503861-1	SHAFT, 1IN - PRIMARY - METER DRIVE - NOVA SERIES II
4	4	250872	BEARING, FLANGE - NOVA SERIES II - 1" SFT - UCFL205-100D1
5	1	503862-1	SHAFT, 1IN - SECONDARY - METER DRIVE - NOVA SERIES II
6	1	503863	PIPE, IDLER SPACER 1 - NOVA SERIES II
7	1	503864-1	PIPE, IDLER SPACER 2 - NOVA SERIES II
8	6	222514	BOLT, HEX - 5/8 X 1 3/4 IN UNF GR8 PL
9	7	250500	NUT, LOCK 5/8 UNC - STOVER - PL
10	2	250001	BOLT, HEX 1/2 X 1 1/2 IN GR5 PL
11	8	250555	WASHER, FLAT - 1/2 IN - GR8 - PL
12	7	250504	NUT, LOCK - 1/2 UNC - STOVER - PL
13	2	250077	BOLT, HEX 3/8 X 2 1/2 IN GR5 PL
14	6	250557	WASHER, FLAT - 3/8 IN GR8 PL
15	5	250562	WASHER, FLAT 5/8 IN PL
16	1	250150	BOLT, HEX 5/8 X 8 UNC GR5 PL
17	2	250503	NUT, LOCK - 3/8 UNC - STOVER - PL
18	3	250048	BOLT, HEX 1/2 X 2 IN GR5 PL
19	2	250013	BOLT, HEX 1/2 X 1 1/4 IN GR5 PL
20	2	250019	BOLT, HEX 3/8 X 1 1/4 IN GR5 PL
21	2	250453	NUT, HEX - 3/8 UNC PL
22	2	503888	SPROCKET, IDLER - 40T18 - 5/8 ID - NOVA SERIES II
23	2	503865	KEY, 1/4 X 1/4 X 2-1/16 IN
24	1	402948	KEY, 1/4 X 1/4 X 1 1/2 IN
25	1	503866	GEAR, DRIVE SHAFT - 20T - NOVA SERIES II
26	1	503867	GEAR, DRIVE SHAFT - 40T - NOVA SERIES II
27	1	503868-1	PIPE, IDLER SPACER 3 - NOVA SERIES II
28	1	503871-1	PLATE, 1/4 IN - MOTOR MOUNT - CHAIN REDUCTION - NOVA SERIES II
29	1	503248-2	WELD, TBT COMMON DRIVE SUPPORT - CHAIN REDUCTION - NOVA SERIE
30	1	503959	ADAPTOR, 5/8 IN HEX TO 1 IN BORE - CHAIN REDUCTION
31	1	503869	SPROCKET, DUAL - 15 AND 15 TOOTH - NOVA SERIES II
32	1	503881	WELD, SPROCKET - 40T15 AND 40T28 - 5/8 IN HEX BORE
33	1	250682	COLLAR, SFT 3/4 IN - SET SCREW - PL
34	6	250740	SCREW, SET - 5/16 X 3/8 IN UNC PL
35	1	250630	SCREW, SET - 1/4 X 3/8 UNC
36	1	260874	VALVE, PWM - OMNISEED - C/W MANIFOLD - MAN. O/R
37	2	250081	BOLT, HEX 1/4 X 1 3/4 IN - GR5 PL
38	2	250559	WASHER, FLAT - 1/4 IN PL
39	2	250458	NUT, HEX - 1/4 UNC PL
40	1	503898	WELD, NOVA METER REDUCTION - PWM MOUNT
41	6	250550	WASHER, FLAT 5/8 IN GR8 PL

Tow Between Gear Reduction Drive
Part Number: 503854-1

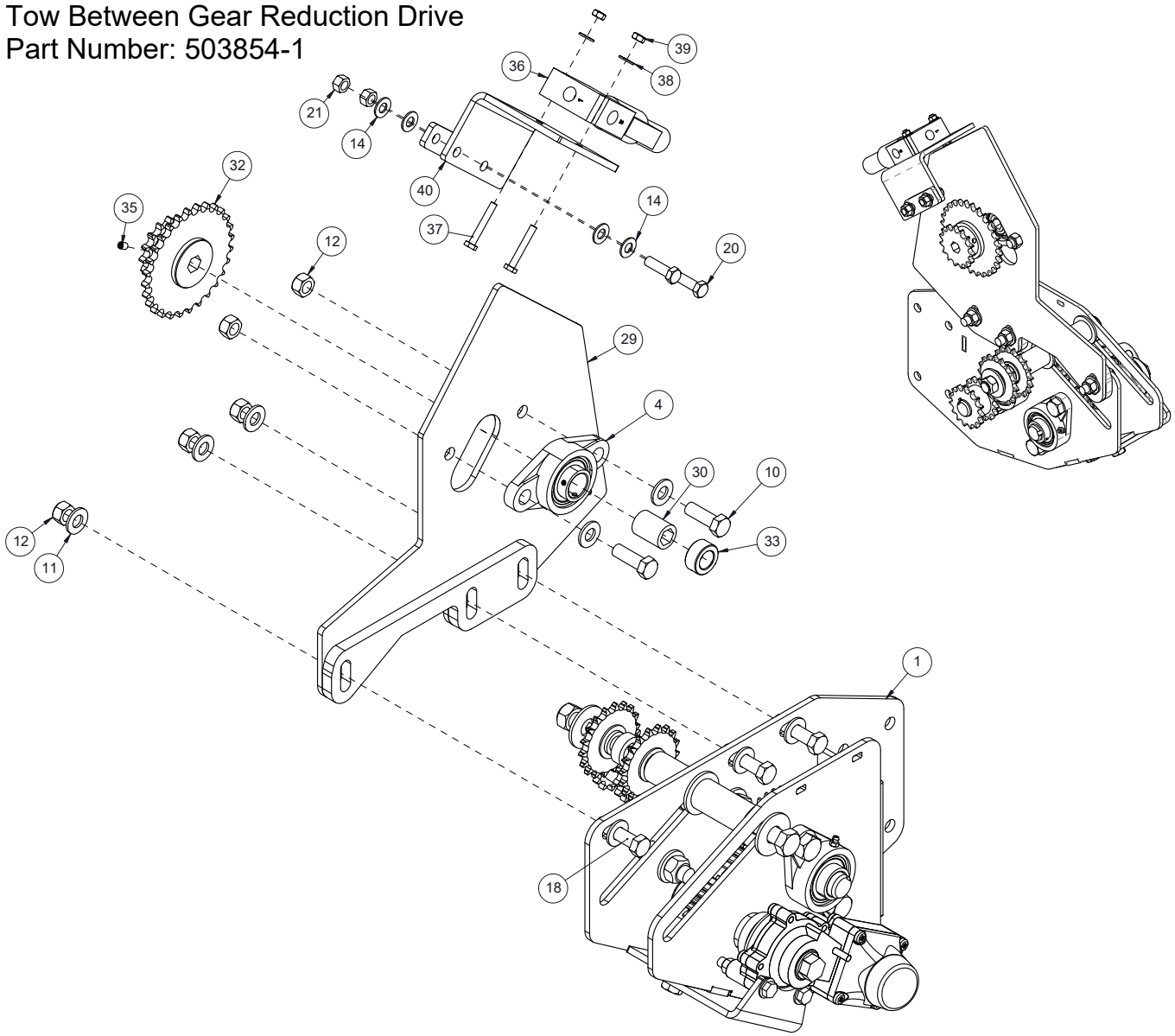

Tow-Between Gear Reduction Drive

Item	Qty.	Part No.	Description
1	1	503977	WELD, STANDARD METER DRIVE - NOVA SERIES II
2	1	260717	MOTOR, HYD - OMNISEED - 7/8 HEX - RAVEN
3	1	503861-1	SHAFT, 1IN - PRIMARY - METER DRIVE - NOVA SERIES II
4	4	250872	BEARING, FLANGE - NOVA SERIES II - 1" SFT - UCFL205-100D1
5	1	503862-1	SHAFT, 1IN - SECONDARY - METER DRIVE - NOVA SERIES II
6	1	503863	PIPE, IDLER SPACER 1 - NOVA SERIES II
7	1	503864-1	PIPE, IDLER SPACER 2 - NOVA SERIES II
8	6	222514	BOLT, HEX - 5/8 X 1 3/4 IN UNF GR8 PL
9	7	250500	NUT, LOCK 5/8 UNC - STOVER - PL
10	2	250001	BOLT, HEX 1/2 X 1 1/2 IN GR5 PL
11	8	250555	WASHER, FLAT - 1/2 IN - GR8 - PL
12	7	250504	NUT, LOCK - 1/2 UNC - STOVER - PL
13	2	250077	BOLT, HEX 3/8 X 2 1/2 IN GR5 PL
14	6	250557	WASHER, FLAT - 3/8 IN GR8 PL
15	5	250562	WASHER, FLAT 5/8 IN PL
16	1	250150	BOLT, HEX 5/8 X 8 UNC GR5 PL
17	2	250503	NUT, LOCK - 3/8 UNC - STOVER - PL
18	3	250048	BOLT, HEX 1/2 X 2 IN GR5 PL
19	2	250013	BOLT, HEX 1/2 X 1 1/4 IN GR5 PL
20	2	250019	BOLT, HEX 3/8 X 1 1/4 IN GR5 PL
21	2	250453	NUT, HEX - 3/8 UNC PL
22	2	503888	SPROCKET, IDLER - 40T18 - 5/8 ID - NOVA SERIES II
23	2	503865	KEY, 1/4 X 1/4 X 2-1/16 IN
24	1	402948	KEY, 1/4 X 1/4 X 1 1/2 IN
25	1	503866	GEAR, DRIVE SHAFT - 20T - NOVA SERIES II
26	1	503867	GEAR, DRIVE SHAFT - 40T - NOVA SERIES II
27	1	503868-1	PIPE, IDLER SPACER 3 - NOVA SERIES II
28	1	503871-1	PLATE, 1/4 IN - MOTOR MOUNT - CHAIN REDUCTION - NOVA SERIES II
29	1	503248-2	WELD, TBT COMMON DRIVE SUPPORT - CHAIN REDUCTION - NOVA SERIE
30	1	503959	ADAPTOR, 5/8 IN HEX TO 1 IN BORE - CHAIN REDUCTION
31	1	503869	SPROCKET, DUAL - 15 AND 15 TOOTH - NOVA SERIES II
32	1	503881	WELD, SPROCKET - 40T15 AND 40T28 - 5/8 IN HEX BORE
33	1	250682	COLLAR, SFT 3/4 IN - SET SCREW - PL
34	6	250740	SCREW, SET - 5/16 X 3/8 IN UNC PL
35	1	250630	SCREW, SET - 1/4 X 3/8 UNC
36	1	260874	VALVE, PWM - OMNISEED - C/W MANIFOLD - MAN. O/R
37	2	250081	BOLT, HEX 1/4 X 1 3/4 IN - GR5 PL
38	2	250559	WASHER, FLAT - 1/4 IN PL
39	2	250458	NUT, HEX - 1/4 UNC PL
40	1	503898	WELD, NOVA METER REDUCTION - PWM MOUNT
41	6	250550	WASHER, FLAT 5/8 IN GR8 PL

Tow Between Gear Reduction Drive
Part Number: 503854-1

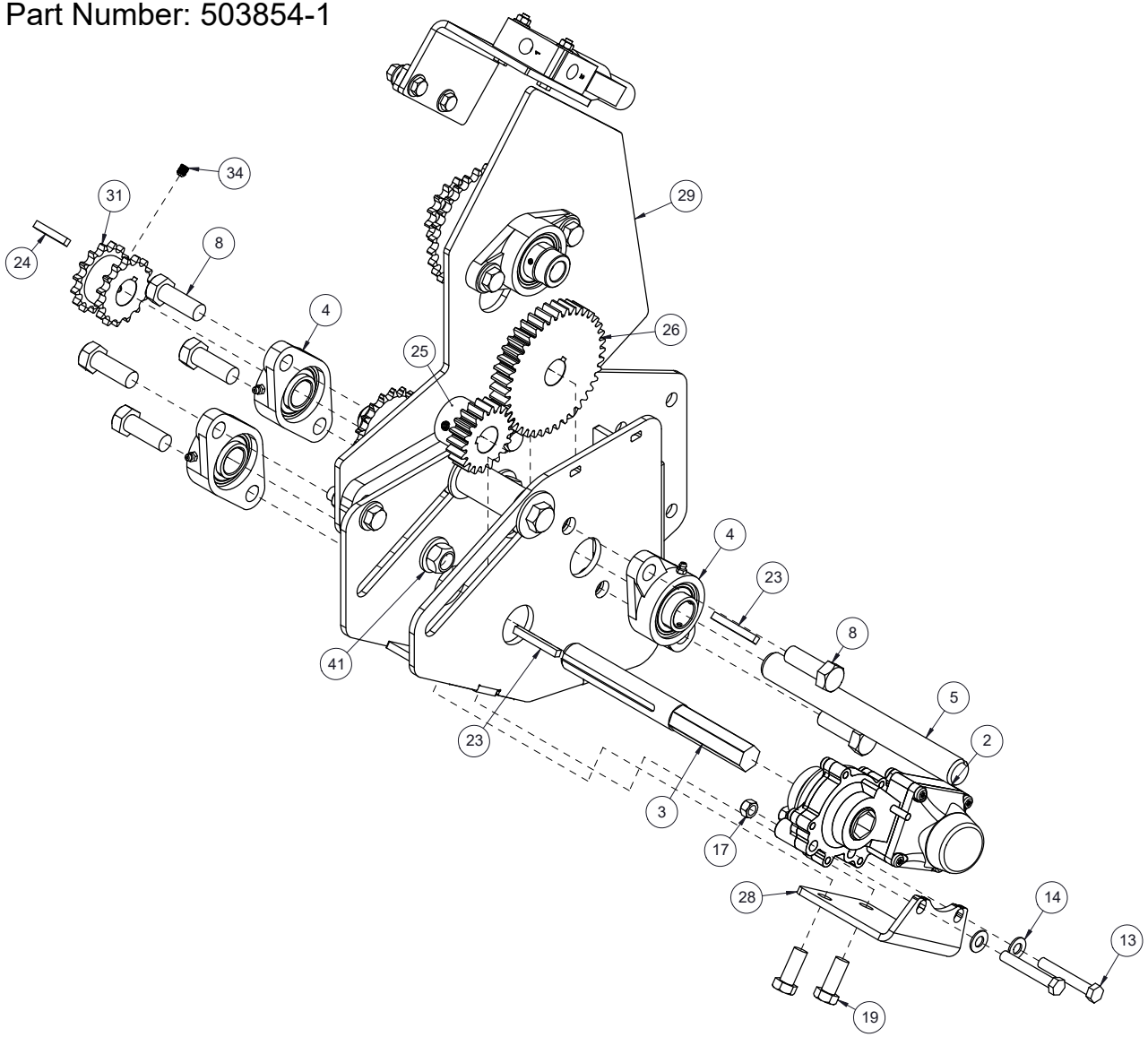

Tow-Between Gear Reduction Drive

Item	Qty.	Part No.	Description
1	1	503977	WELD, STANDARD METER DRIVE - NOVA SERIES II
2	1	260717	MOTOR, HYD - OMNISEED - 7/8 HEX - RAVEN
3	1	503861-1	SHAFT, 1IN - PRIMARY - METER DRIVE - NOVA SERIES II
4	4	250872	BEARING, FLANGE - NOVA SERIES II - 1" SFT - UCFL205-100D1
5	1	503862-1	SHAFT, 1IN - SECONDARY - METER DRIVE - NOVA SERIES II
6	1	503863	PIPE, IDLER SPACER 1 - NOVA SERIES II
7	1	503864-1	PIPE, IDLER SPACER 2 - NOVA SERIES II
8	6	222514	BOLT, HEX - 5/8 X 1 3/4 IN UNF GR8 PL
9	7	250500	NUT, LOCK 5/8 UNC - STOVER - PL
10	2	250001	BOLT, HEX 1/2 X 1 1/2 IN GR5 PL
11	8	250555	WASHER, FLAT - 1/2 IN - GR8 - PL
12	7	250504	NUT, LOCK - 1/2 UNC - STOVER - PL
13	2	250077	BOLT, HEX 3/8 X 2 1/2 IN GR5 PL
14	6	250557	WASHER, FLAT - 3/8 IN GR8 PL
15	5	250562	WASHER, FLAT 5/8 IN PL
16	1	250150	BOLT, HEX 5/8 X 8 UNC GR5 PL
17	2	250503	NUT, LOCK - 3/8 UNC - STOVER - PL
18	3	250048	BOLT, HEX 1/2 X 2 IN GR5 PL
19	2	250013	BOLT, HEX 1/2 X 1 1/4 IN GR5 PL
20	2	250019	BOLT, HEX 3/8 X 1 1/4 IN GR5 PL
21	2	250453	NUT, HEX - 3/8 UNC PL
22	2	503888	SPROCKET, IDLER - 40T18 - 5/8 ID - NOVA SERIES II
23	2	503865	KEY, 1/4 X 1/4 X 2-1/16 IN
24	1	402948	KEY, 1/4 X 1/4 X 1 1/2 IN
25	1	503866	GEAR, DRIVE SHAFT - 20T - NOVA SERIES II
26	1	503867	GEAR, DRIVE SHAFT - 40T - NOVA SERIES II
27	1	503868-1	PIPE, IDLER SPACER 3 - NOVA SERIES II
28	1	503871-1	PLATE, 1/4 IN - MOTOR MOUNT - CHAIN REDUCTION - NOVA SERIES II
29	1	503248-2	WELD, TBT COMMON DRIVE SUPPORT - CHAIN REDUCTION - NOVA SERIE
30	1	503959	ADAPTOR, 5/8 IN HEX TO 1 IN BORE - CHAIN REDUCTION
31	1	503869	SPROCKET, DUAL - 15 AND 15 TOOTH - NOVA SERIES II
32	1	503881	WELD, SPROCKET - 40T15 AND 40T28 - 5/8 IN HEX BORE
33	1	250682	COLLAR, SFT 3/4 IN - SET SCREW - PL
34	6	250740	SCREW, SET - 5/16 X 3/8 IN UNC PL
35	1	250630	SCREW, SET - 1/4 X 3/8 UNC
36	1	260874	VALVE, PWM - OMNISEED - C/W MANIFOLD - MAN. O/R
37	2	250081	BOLT, HEX 1/4 X 1 3/4 IN - GR5 PL
38	2	250559	WASHER, FLAT - 1/4 IN PL
39	2	250458	NUT, HEX - 1/4 UNC PL
40	1	503898	WELD, NOVA METER REDUCTION - PWM MOUNT
41	6	250550	WASHER, FLAT 5/8 IN GR8 PL

Tow Between Gear Reduction Drive
Part Number: 503854-1

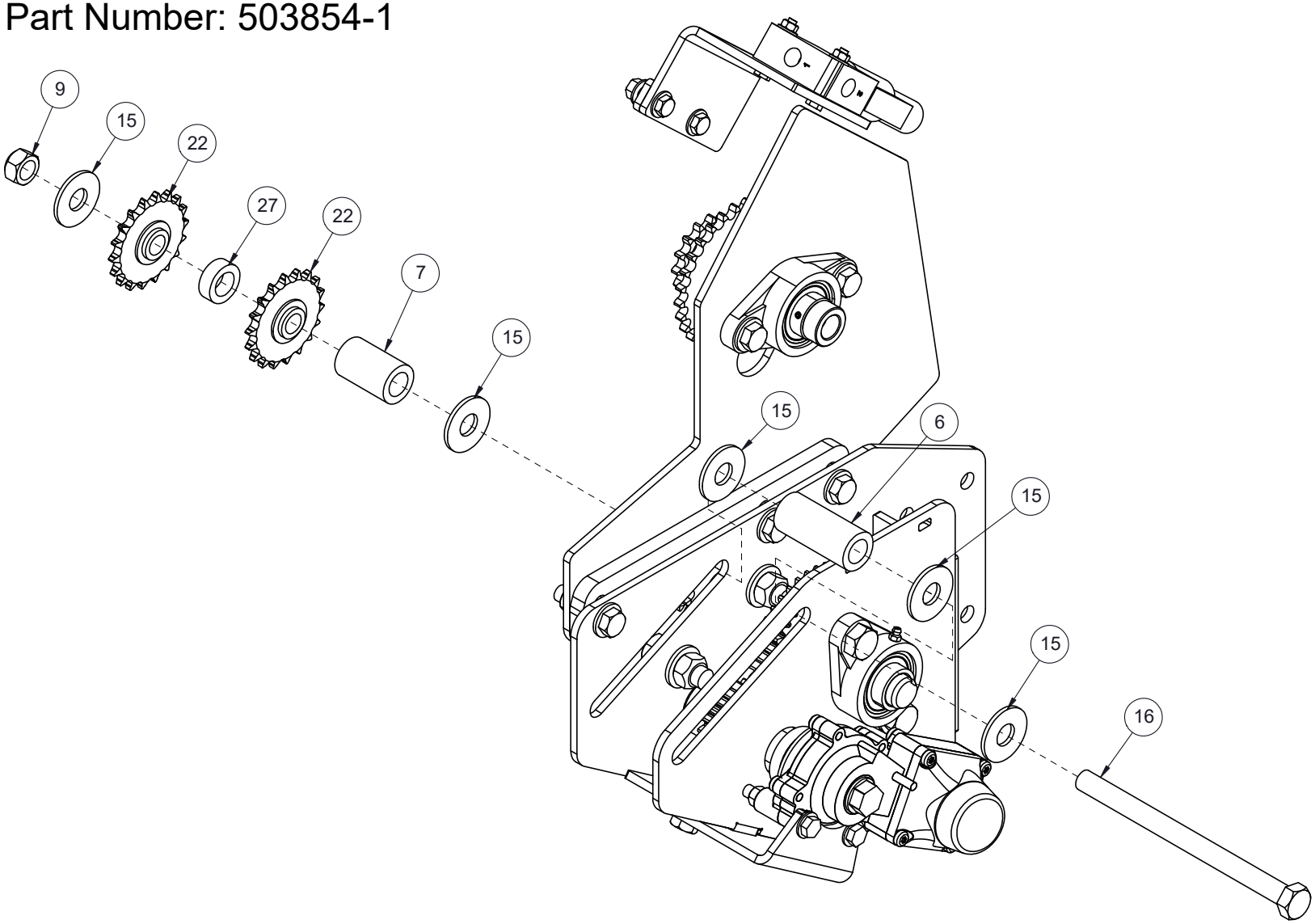

Canola Gear Reduction Drive

Item	Qty.	Part No.	Description
1	1	503977	WELD, STANDARD METER DRIVE - NOVA SERIES II
2	1	260717	MOTOR, HYD - OMNISEED - 7/8 HEX - RAVEN
3	1	503861-1	SHAFT, 1IN - PRIMARY - METER DRIVE - NOVA SERIES II
4	4	250872	BEARING, FLANGE - NOVA SERIES II - 1" SFT - UCFL205-100D1
5	1	503862-1	SHAFT, 1IN - SECONDARY - METER DRIVE - NOVA SERIES II
6	1	503863	PIPE, IDLER SPACER 1 - NOVA SERIES II
7	1	503864-1	PIPE, IDLER SPACER 2 - NOVA SERIES II
8	2	250001	BOLT, HEX 1/2 X 1 1/2 IN GR5 PL
9	8	250555	WASHER, FLAT - 1/2 IN - GR8 - PL
10	7	250504	NUT, LOCK - 1/2 UNC - STOVER - PL
11	2	250077	BOLT, HEX 3/8 X 2 1/2 IN GR5 PL
12	6	250557	WASHER, FLAT - 3/8 IN GR8 PL
13	5	250562	WASHER, FLAT 5/8 IN PL
14	1	250150	BOLT, HEX 5/8 X 8 UNC GR5 PL
15	2	250503	NUT, LOCK - 3/8 UNC - STOVER - PL
16	7	250500	NUT, LOCK 5/8 UNC - STOVER - PL
17	2	503888	SPROCKET, IDLER - 40T18 - 5/8 ID - NOVA SERIES II
18	2	503865	KEY, 1/4 X 1/4 X 2-1/16 IN
19	1	402948	KEY, 1/4 X 1/4 X 1 1/2 IN
20	1	503866	GEAR, DRIVE SHAFT - 20T - NOVA SERIES II
21	1	503867	GEAR, DRIVE SHAFT - 40T - NOVA SERIES II
22	1	503868-1	PIPE, IDLER SPACER 3 - NOVA SERIES II
23	1	503871-1	PLATE, 1/4 IN - MOTOR MOUNT - CHAIN REDUCTION - NOVA SERIES II
24	1	503893-2	WELD, COMMON DRIVE SUPPORT - CHAIN REDUCTION - NOVA SERIES II
25	3	250048	BOLT, HEX 1/2 X 2 IN GR5 PL
26	2	250013	BOLT, HEX 1/2 X 1 1/4 IN GR5 PL
27	2	250019	BOLT, HEX 3/8 X 1 1/4 IN GR5 PL
28	2	250453	NUT, HEX - 3/8 UNC PL
29	2	250559	WASHER, FLAT - 1/4 IN PL
30	1	503886	WELD, 60 TOOTH SPROCKET - 5/8 HEX - NOVA SERIES II
31	1	250643-1	BUSHING, NOVA METER - 5/8 HEX - J4
32	1	503879	WELD, 36 TOOTH SPROCKET - 5/8 HEX - NOVA SERIES II
33	1	503884	WELD, SPROCKET - 40T15 AND 40T28 - 1 IN BORE
34	1	250682	COLLAR, SFT 3/4 IN - SET SCREW - PL
35	6	250740	SCREW, SET - 5/16 X 3/8 IN UNC PL
36	2	250630	SCREW, SET - 1/4 X 3/8 UNC
37	1	260874	VALVE, PWM - OMNISEED - C/W MANIFOLD - MAN. O/R
38	2	250081	BOLT, HEX 1/4 X 1 3/4 IN - GR5 PL
39	2	250458	NUT, HEX - 1/4 UNC PL
40	1	503898	WELD, NOVA METER REDUCTION - PWM MOUNT
41	6	222514	BOLT, HEX - 5/8 X 1 3/4 IN UNF GR8 PL
42	6	250550	WASHER, FLAT 5/8 IN GR8 PL
43	1	503959	ADAPTOR, 5/8 IN HEX TO 1 IN BORE - CHAIN REDUCTION

Canola Gear Reduction Drive
Part Number: 503851-1

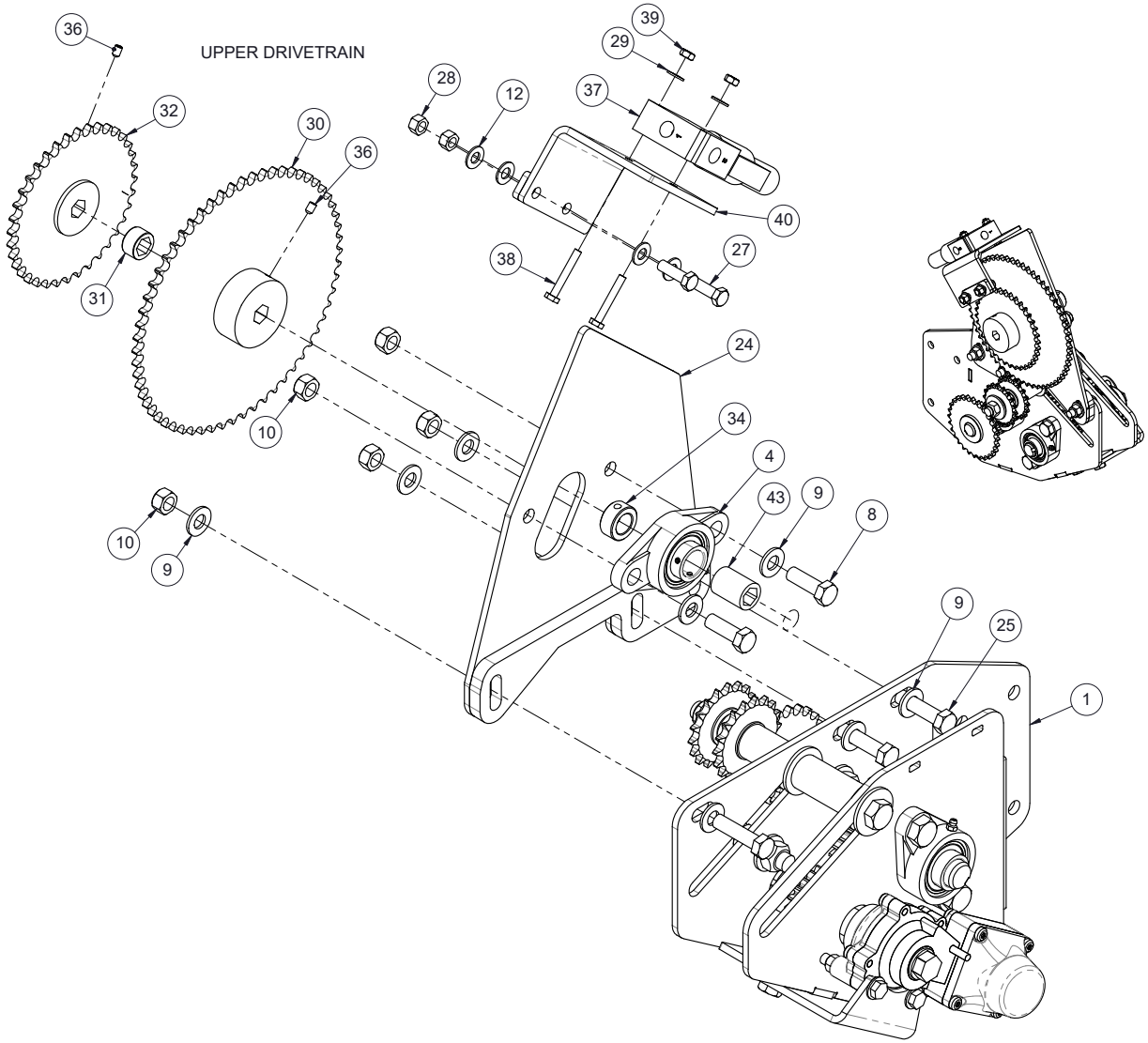

Canola Gear Reduction Drive

Item	Qty.	Part No.	Description
1	1	503977	WELD, STANDARD METER DRIVE - NOVA SERIES II
2	1	260717	MOTOR, HYD - OMNISEED - 7/8 HEX - RAVEN
3	1	503861-1	SHAFT, 1IN - PRIMARY - METER DRIVE - NOVA SERIES II
4	4	250872	BEARING, FLANGE - NOVA SERIES II - 1" SFT - UCFL205-100D1
5	1	503862-1	SHAFT, 1IN - SECONDARY - METER DRIVE - NOVA SERIES II
6	1	503863	PIPE, IDLER SPACER 1 - NOVA SERIES II
7	1	503864-1	PIPE, IDLER SPACER 2 - NOVA SERIES II
8	2	250001	BOLT, HEX 1/2 X 1 1/2 IN GR5 PL
9	8	250555	WASHER, FLAT - 1/2 IN - GR8 - PL
10	7	250504	NUT, LOCK - 1/2 UNC - STOVER - PL
11	2	250077	BOLT, HEX 3/8 X 2 1/2 IN GR5 PL
12	6	250557	WASHER, FLAT - 3/8 IN GR8 PL
13	5	250562	WASHER, FLAT 5/8 IN PL
14	1	250150	BOLT, HEX 5/8 X 8 UNC GR5 PL
15	2	250503	NUT, LOCK - 3/8 UNC - STOVER - PL
16	7	250500	NUT, LOCK 5/8 UNC - STOVER - PL
17	2	503888	SPROCKET, IDLER - 40T18 - 5/8 ID - NOVA SERIES II
18	2	503865	KEY, 1/4 X 1/4 X 2-1/16 IN
19	1	402948	KEY, 1/4 X 1/4 X 1 1/2 IN
20	1	503866	GEAR, DRIVE SHAFT - 20T - NOVA SERIES II
21	1	503867	GEAR, DRIVE SHAFT - 40T - NOVA SERIES II
22	1	503868-1	PIPE, IDLER SPACER 3 - NOVA SERIES II
23	1	503871-1	PLATE, 1/4 IN - MOTOR MOUNT - CHAIN REDUCTION - NOVA SERIES II
24	1	503893-2	WELD, COMMON DRIVE SUPPORT - CHAIN REDUCTION - NOVA SERIES II
25	3	250048	BOLT, HEX 1/2 X 2 IN GR5 PL
26	2	250013	BOLT, HEX 1/2 X 1 1/4 IN GR5 PL
27	2	250019	BOLT, HEX 3/8 X 1 1/4 IN GR5 PL
28	2	250453	NUT, HEX - 3/8 UNC PL
29	2	250559	WASHER, FLAT - 1/4 IN PL
30	1	503886	WELD, 60 TOOTH SPROCKET - 5/8 HEX - NOVA SERIES II
31	1	250643-1	BUSHING, NOVA METER - 5/8 HEX - J4
32	1	503879	WELD, 36 TOOTH SPROCKET - 5/8 HEX - NOVA SERIES II
33	1	503884	WELD, SPROCKET - 40T15 AND 40T28 - 1 IN BORE
34	1	250682	COLLAR, SFT 3/4 IN - SET SCREW - PL
35	6	250740	SCREW, SET - 5/16 X 3/8 IN UNC PL
36	2	250630	SCREW, SET - 1/4 X 3/8 UNC
37	1	260874	VALVE, PWM - OMNISEED - C/W MANIFOLD - MAN. O/R
38	2	250081	BOLT, HEX 1/4 X 1 3/4 IN - GR5 PL
39	2	250458	NUT, HEX - 1/4 UNC PL
40	1	503898	WELD, NOVA METER REDUCTION - PWM MOUNT
41	6	222514	BOLT, HEX - 5/8 X 1 3/4 IN UNF GR8 PL
42	6	250550	WASHER, FLAT 5/8 IN GR8 PL
43	1	503959	ADAPTOR, 5/8 IN HEX TO 1 IN BORE - CHAIN REDUCTION

Canola Gear Reduction Drive
Part Number: 503851-1

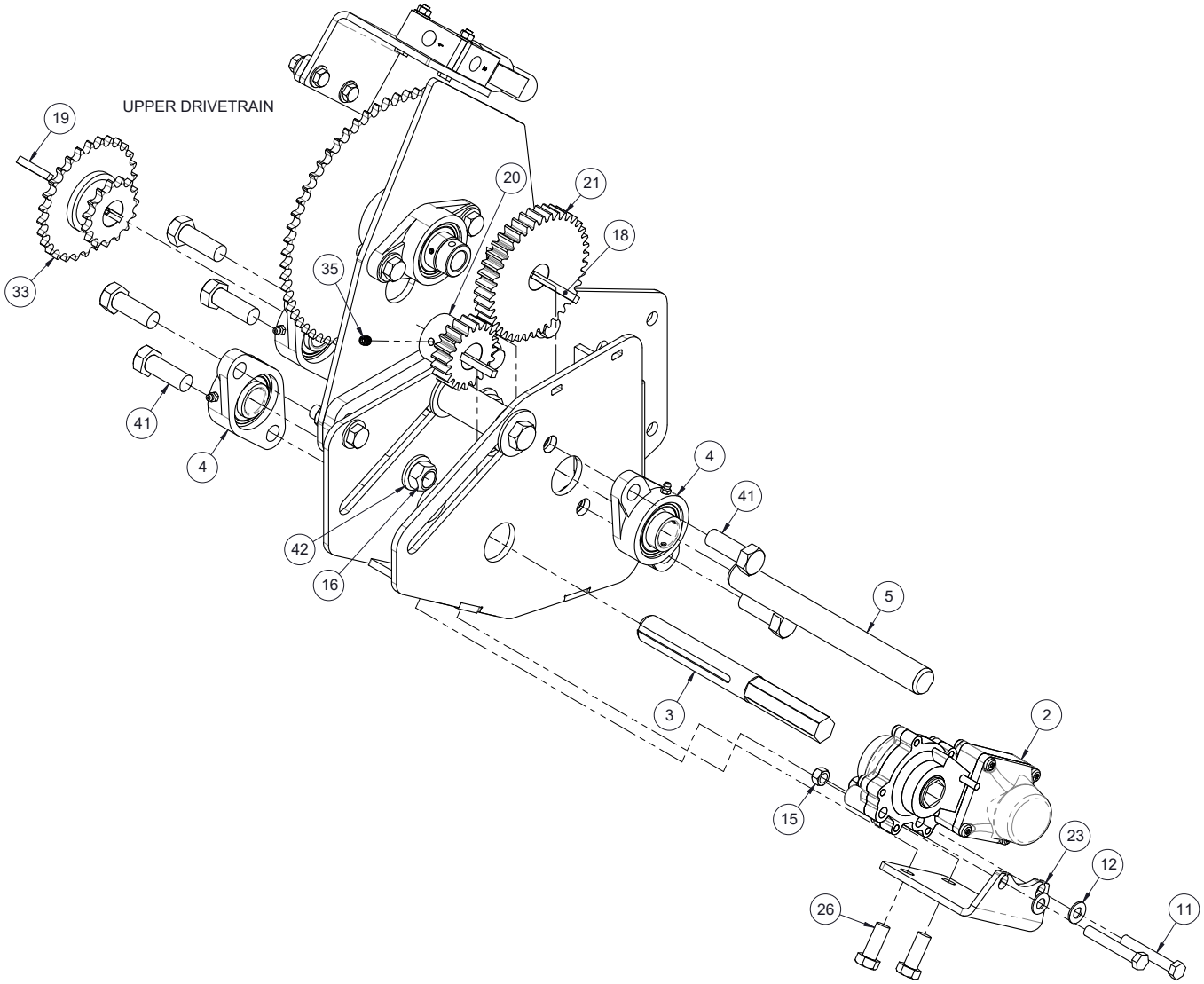

Canola Gear Reduction Drive

Item	Qty.	Part No.	Description
1	1	503977	WELD, STANDARD METER DRIVE - NOVA SERIES II
2	1	260717	MOTOR, HYD - OMNISEED - 7/8 HEX - RAVEN
3	1	503861-1	SHAFT, 1IN - PRIMARY - METER DRIVE - NOVA SERIES II
4	4	250872	BEARING, FLANGE - NOVA SERIES II - 1" SFT - UCFL205-100D1
5	1	503862-1	SHAFT, 1IN - SECONDARY - METER DRIVE - NOVA SERIES II
6	1	503863	PIPE, IDLER SPACER 1 - NOVA SERIES II
7	1	503864-1	PIPE, IDLER SPACER 2 - NOVA SERIES II
8	2	250001	BOLT, HEX 1/2 X 1 1/2 IN GR5 PL
9	8	250555	WASHER, FLAT - 1/2 IN - GR8 - PL
10	7	250504	NUT, LOCK - 1/2 UNC - STOVER - PL
11	2	250077	BOLT, HEX 3/8 X 2 1/2 IN GR5 PL
12	6	250557	WASHER, FLAT - 3/8 IN GR8 PL
13	5	250562	WASHER, FLAT 5/8 IN PL
14	1	250150	BOLT, HEX 5/8 X 8 UNC GR5 PL
15	2	250503	NUT, LOCK - 3/8 UNC - STOVER - PL
16	7	250500	NUT, LOCK 5/8 UNC - STOVER - PL
17	2	503888	SPROCKET, IDLER - 40T18 - 5/8 ID - NOVA SERIES II
18	2	503865	KEY, 1/4 X 1/4 X 2-1/16 IN
19	1	402948	KEY, 1/4 X 1/4 X 1 1/2 IN
20	1	503866	GEAR, DRIVE SHAFT - 20T - NOVA SERIES II
21	1	503867	GEAR, DRIVE SHAFT - 40T - NOVA SERIES II
22	1	503868-1	PIPE, IDLER SPACER 3 - NOVA SERIES II
23	1	503871-1	PLATE, 1/4 IN - MOTOR MOUNT - CHAIN REDUCTION - NOVA SERIES II
24	1	503893-2	WELD, COMMON DRIVE SUPPORT - CHAIN REDUCTION - NOVA SERIES II
25	3	250048	BOLT, HEX 1/2 X 2 IN GR5 PL
26	2	250013	BOLT, HEX 1/2 X 1 1/4 IN GR5 PL
27	2	250019	BOLT, HEX 3/8 X 1 1/4 IN GR5 PL
28	2	250453	NUT, HEX - 3/8 UNC PL
29	2	250559	WASHER, FLAT - 1/4 IN PL
30	1	503886	WELD, 60 TOOTH SPROCKET - 5/8 HEX - NOVA SERIES II
31	1	250643-1	BUSHING, NOVA METER - 5/8 HEX - J4
32	1	503879	WELD, 36 TOOTH SPROCKET - 5/8 HEX - NOVA SERIES II
33	1	503884	WELD, SPROCKET - 40T15 AND 40T28 - 1 IN BORE
34	1	250682	COLLAR, SFT 3/4 IN - SET SCREW - PL
35	6	250740	SCREW, SET - 5/16 X 3/8 IN UNC PL
36	2	250630	SCREW, SET - 1/4 X 3/8 UNC
37	1	260874	VALVE, PWM - OMNISEED - C/W MANIFOLD - MAN. O/R
38	2	250081	BOLT, HEX 1/4 X 1 3/4 IN - GR5 PL
39	2	250458	NUT, HEX - 1/4 UNC PL
40	1	503898	WELD, NOVA METER REDUCTION - PWM MOUNT
41	6	222514	BOLT, HEX - 5/8 X 1 3/4 IN UNF GR8 PL
42	6	250550	WASHER, FLAT 5/8 IN GR8 PL
43	1	503959	ADAPTOR, 5/8 IN HEX TO 1 IN BORE - CHAIN REDUCTION

Canola Gear Reduction Drive
Part Number: 503851-1

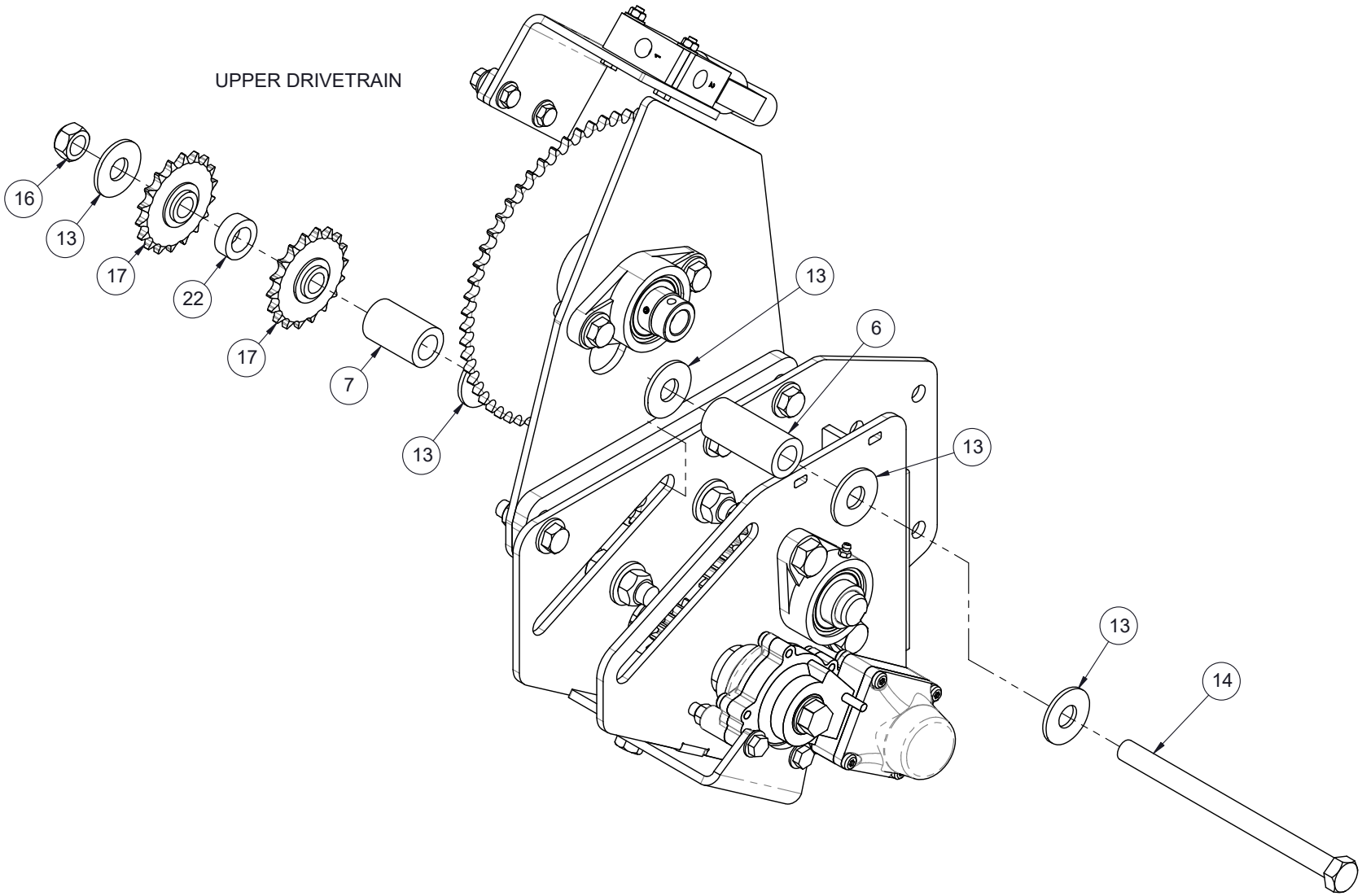

Tow Between Canola Gear Reduction Drive

Item	Qty.	Part No.	Description
1	1	503977	WELD, STANDARD METER DRIVE - NOVA SERIES II
2	1	260717	MOTOR, HYD - OMNISEED - 7/8 HEX - RAVEN
3	1	503861-1	SHAFT, 1IN - PRIMARY - METER DRIVE - NOVA SERIES II
4	4	250872	BEARING, FLANGE - NOVA SERIES II - 1" SFT - UCFL205-100D1
5	1	503862-1	SHAFT, 1IN - SECONDARY - METER DRIVE - NOVA SERIES II
6	1	503863	PIPE, IDLER SPACER 1 - NOVA SERIES II
7	1	503864-1	PIPE, IDLER SPACER 2 - NOVA SERIES II
8	6	222514	BOLT, HEX - 5/8 X 1 3/4 IN UNF GR8 PL
9	7	250500	NUT, LOCK 5/8 UNC - STOVER - PL
10	6	250001	BOLT, HEX 1/2 X 1 1/2 IN GR5 PL
11	16	250555	WASHER, FLAT - 1/2 IN - GR8 - PL
12	11	250504	NUT, LOCK - 1/2 UNC - STOVER - PL
13	2	250077	BOLT, HEX 3/8 X 2 1/2 IN GR5 PL
14	6	250557	WASHER, FLAT - 3/8 IN GR8 PL
15	5	250562	WASHER, FLAT 5/8 IN PL
16	1	250150	BOLT, HEX 5/8 X 8 UNC GR5 PL
17	2	250503	NUT, LOCK - 3/8 UNC - STOVER - PL
18	2	503888	SPROCKET, IDLER - 40T18 - 5/8 ID - NOVA SERIES II
19	2	503865	KEY, 1/4 X 1/4 X 2-1/16 IN
20	1	402948	KEY, 1/4 X 1/4 X 1 1/2 IN
21	1	503866	GEAR, DRIVE SHAFT - 20T - NOVA SERIES II
22	1	503867	GEAR, DRIVE SHAFT - 40T - NOVA SERIES II
23	1	503868-1	PIPE, IDLER SPACER 3 - NOVA SERIES II
24	1	503871-1	PLATE, 1/4 IN - MOTOR MOUNT - CHAIN REDUCTION - NOVA SERIES II
25	1	503248-2	WELD, TBT COMMON DRIVE SUPPORT - CHAIN REDUCTION - NOVA SERIE
26	3	250048	BOLT, HEX 1/2 X 2 IN GR5 PL
27	2	250013	BOLT, HEX 1/2 X 1 1/4 IN GR5 PL
28	2	250019	BOLT, HEX 3/8 X 1 1/4 IN GR5 PL
29	2	250453	NUT, HEX - 3/8 UNC PL
30	1	503959	ADAPTOR, 5/8 IN HEX TO 1 IN BORE - CHAIN REDUCTION
31	1	250682	COLLAR, SFT 3/4 IN - SET SCREW - PL
32	1	503886	WELD, 60 TOOTH SPROCKET - 5/8 HEX - NOVA SERIES II
33	1	250643-1	BUSHING, NOVA METER - 5/8 HEX - J4
34	1	503879	WELD, 36 TOOTH SPROCKET - 5/8 HEX - NOVA SERIES II
35	1	503884	WELD, SPROCKET - 40T15 AND 40T28 - 1 IN BORE
36	1	260874	VALVE, PWM - OMNISEED - C/W MANIFOLD - MAN. O/R
37	2	250081	BOLT, HEX 1/4 X 1 3/4 IN - GR5 PL
38	2	250559	WASHER, FLAT - 1/4 IN PL
39	2	250458	NUT, HEX - 1/4 UNC PL
40	1	503898	WELD, NOVA METER REDUCTION - PWM MOUNT
41	6	250550	WASHER, FLAT 5/8 IN GR8 PL
42	2	250630	SCREW, SET - 1/4 X 3/8 UNC
43	6	250740	SCREW, SET - 5/16 X 3/8 IN UNC PL

Tow Between Canola Gear Reduction Drive
Part Number: 503853-1

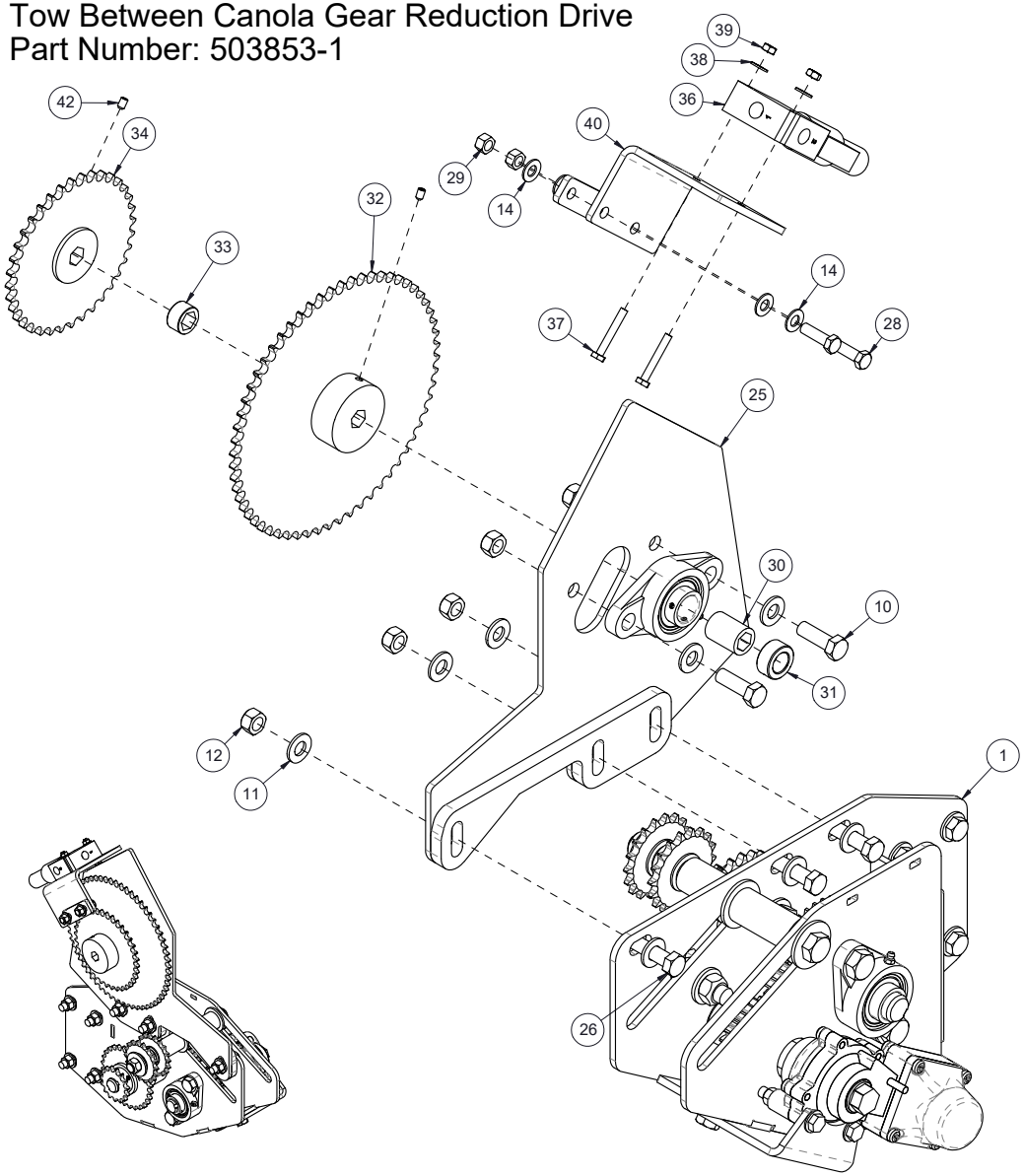

Tow Between Canola Gear Reduction Drive

Item	Qty.	Part No.	Description
1	1	503977	WELD, STANDARD METER DRIVE - NOVA SERIES II
2	1	260717	MOTOR, HYD - OMNISEED - 7/8 HEX - RAVEN
3	1	503861-1	SHAFT, 1IN - PRIMARY - METER DRIVE - NOVA SERIES II
4	4	250872	BEARING, FLANGE - NOVA SERIES II - 1" SFT - UCFL205-100D1
5	1	503862-1	SHAFT, 1IN - SECONDARY - METER DRIVE - NOVA SERIES II
6	1	503863	PIPE, IDLER SPACER 1 - NOVA SERIES II
7	1	503864-1	PIPE, IDLER SPACER 2 - NOVA SERIES II
8	6	222514	BOLT, HEX - 5/8 X 1 3/4 IN UNF GR8 PL
9	7	250500	NUT, LOCK 5/8 UNC - STOVER - PL
10	6	250001	BOLT, HEX 1/2 X 1 1/2 IN GR5 PL
11	16	250555	WASHER, FLAT - 1/2 IN - GR8 - PL
12	11	250504	NUT, LOCK - 1/2 UNC - STOVER - PL
13	2	250077	BOLT, HEX 3/8 X 2 1/2 IN GR5 PL
14	6	250557	WASHER, FLAT - 3/8 IN GR8 PL
15	5	250562	WASHER, FLAT 5/8 IN PL
16	1	250150	BOLT, HEX 5/8 X 8 UNC GR5 PL
17	2	250503	NUT, LOCK - 3/8 UNC - STOVER - PL
18	2	503888	SPROCKET, IDLER - 40T18 - 5/8 ID - NOVA SERIES II
19	2	503865	KEY, 1/4 X 1/4 X 2-1/16 IN
20	1	402948	KEY, 1/4 X 1/4 X 1 1/2 IN
21	1	503866	GEAR, DRIVE SHAFT - 20T - NOVA SERIES II
22	1	503867	GEAR, DRIVE SHAFT - 40T - NOVA SERIES II
23	1	503868-1	PIPE, IDLER SPACER 3 - NOVA SERIES II
24	1	503871-1	PLATE, 1/4 IN - MOTOR MOUNT - CHAIN REDUCTION - NOVA SERIES II
25	1	503248-2	WELD, TBT COMMON DRIVE SUPPORT - CHAIN REDUCTION - NOVA SERIE
26	3	250048	BOLT, HEX 1/2 X 2 IN GR5 PL
27	2	250013	BOLT, HEX 1/2 X 1 1/4 IN GR5 PL
28	2	250019	BOLT, HEX 3/8 X 1 1/4 IN GR5 PL
29	2	250453	NUT, HEX - 3/8 UNC PL
30	1	503959	ADAPTOR, 5/8 IN HEX TO 1 IN BORE - CHAIN REDUCTION
31	1	250682	COLLAR, SFT 3/4 IN - SET SCREW - PL
32	1	503886	WELD, 60 TOOTH SPROCKET - 5/8 HEX - NOVA SERIES II
33	1	250643-1	BUSHING, NOVA METER - 5/8 HEX - J4
34	1	503879	WELD, 36 TOOTH SPROCKET - 5/8 HEX - NOVA SERIES II
35	1	503884	WELD, SPROCKET - 40T15 AND 40T28 - 1 IN BORE
36	1	260874	VALVE, PWM - OMNISEED - C/W MANIFOLD - MAN. O/R
37	2	250081	BOLT, HEX 1/4 X 1 3/4 IN - GR5 PL
38	2	250559	WASHER, FLAT - 1/4 IN PL
39	2	250458	NUT, HEX - 1/4 UNC PL
40	1	503898	WELD, NOVA METER REDUCTION - PWM MOUNT
41	6	250550	WASHER, FLAT 5/8 IN GR8 PL
42	2	250630	SCREW, SET - 1/4 X 3/8 UNC
43	6	250740	SCREW, SET - 5/16 X 3/8 IN UNC PL

Tow Between Canola Gear Reduction Drive
Part Number: 503853-1

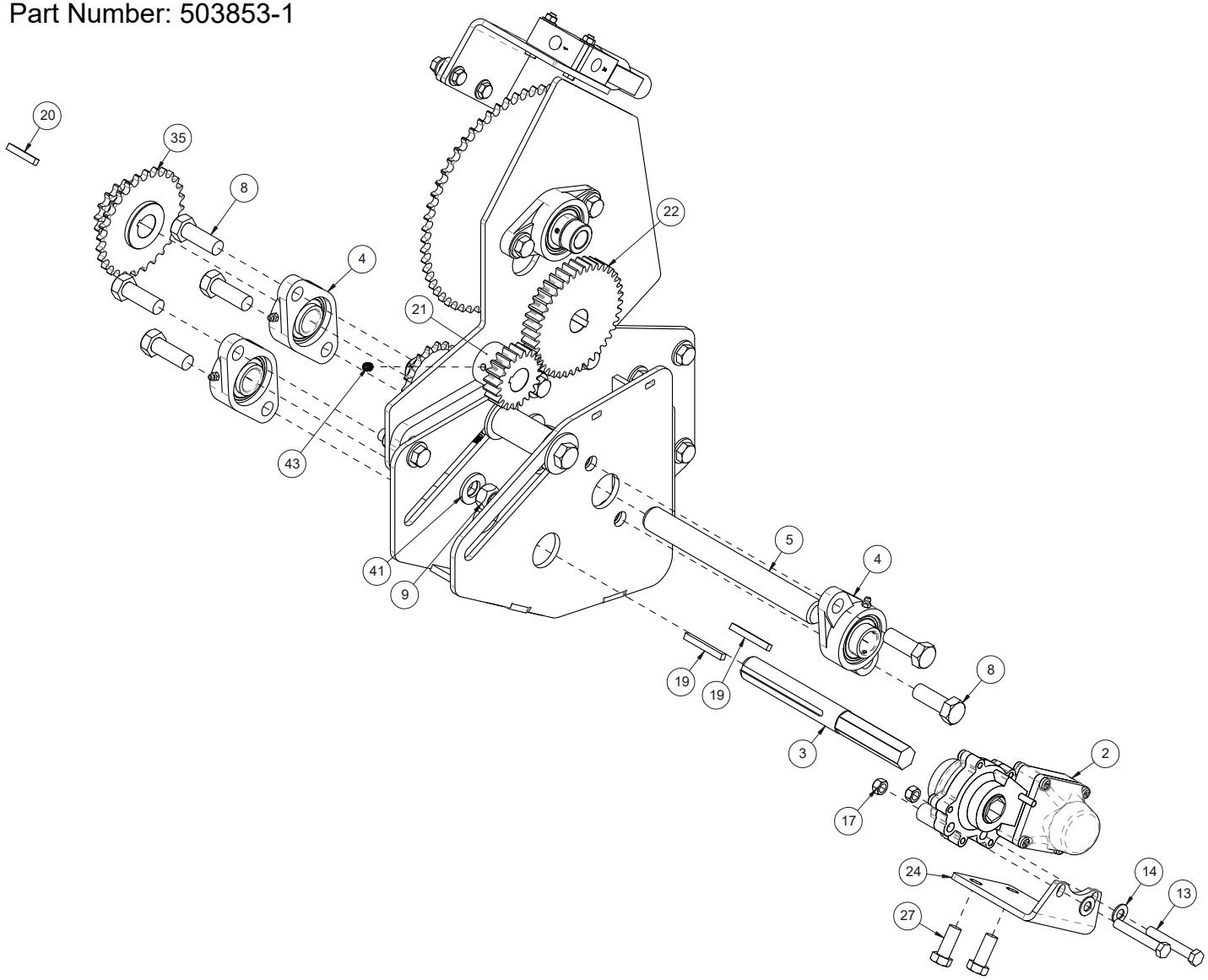

Tow Between Canola Gear Reduction Drive

Item	Qty.	Part No.	Description
1	1	503977	WELD, STANDARD METER DRIVE - NOVA SERIES II
2	1	260717	MOTOR, HYD - OMNISEED - 7/8 HEX - RAVEN
3	1	503861-1	SHAFT, 1IN - PRIMARY - METER DRIVE - NOVA SERIES II
4	4	250872	BEARING, FLANGE - NOVA SERIES II - 1" SFT - UCFL205-100D1
5	1	503862-1	SHAFT, 1IN - SECONDARY - METER DRIVE - NOVA SERIES II
6	1	503863	PIPE, IDLER SPACER 1 - NOVA SERIES II
7	1	503864-1	PIPE, IDLER SPACER 2 - NOVA SERIES II
8	6	222514	BOLT, HEX - 5/8 X 1 3/4 IN UNF GR8 PL
9	7	250500	NUT, LOCK 5/8 UNC - STOVER - PL
10	6	250001	BOLT, HEX 1/2 X 1 1/2 IN GR5 PL
11	16	250555	WASHER, FLAT - 1/2 IN - GR8 - PL
12	11	250504	NUT, LOCK - 1/2 UNC - STOVER - PL
13	2	250077	BOLT, HEX 3/8 X 2 1/2 IN GR5 PL
14	6	250557	WASHER, FLAT - 3/8 IN GR8 PL
15	5	250562	WASHER, FLAT 5/8 IN PL
16	1	250150	BOLT, HEX 5/8 X 8 UNC GR5 PL
17	2	250503	NUT, LOCK - 3/8 UNC - STOVER - PL
18	2	503888	SPROCKET, IDLER - 40T18 - 5/8 ID - NOVA SERIES II
19	2	503865	KEY, 1/4 X 1/4 X 2-1/16 IN
20	1	402948	KEY, 1/4 X 1/4 X 1 1/2 IN
21	1	503866	GEAR, DRIVE SHAFT - 20T - NOVA SERIES II
22	1	503867	GEAR, DRIVE SHAFT - 40T - NOVA SERIES II
23	1	503868-1	PIPE, IDLER SPACER 3 - NOVA SERIES II
24	1	503871-1	PLATE, 1/4 IN - MOTOR MOUNT - CHAIN REDUCTION - NOVA SERIES II
25	1	503248-2	WELD, TBT COMMON DRIVE SUPPORT - CHAIN REDUCTION - NOVA SERIE
26	3	250048	BOLT, HEX 1/2 X 2 IN GR5 PL
27	2	250013	BOLT, HEX 1/2 X 1 1/4 IN GR5 PL
28	2	250019	BOLT, HEX 3/8 X 1 1/4 IN GR5 PL
29	2	250453	NUT, HEX - 3/8 UNC PL
30	1	503959	ADAPTOR, 5/8 IN HEX TO 1 IN BORE - CHAIN REDUCTION
31	1	250682	COLLAR, SFT 3/4 IN - SET SCREW - PL
32	1	503886	WELD, 60 TOOTH SPROCKET - 5/8 HEX - NOVA SERIES II
33	1	250643-1	BUSHING, NOVA METER - 5/8 HEX - J4
34	1	503879	WELD, 36 TOOTH SPROCKET - 5/8 HEX - NOVA SERIES II
35	1	503884	WELD, SPROCKET - 40T15 AND 40T28 - 1 IN BORE
36	1	260874	VALVE, PWM - OMNISEED - C/W MANIFOLD - MAN. O/R
37	2	250081	BOLT, HEX 1/4 X 1 3/4 IN - GR5 PL
38	2	250559	WASHER, FLAT - 1/4 IN PL
39	2	250458	NUT, HEX - 1/4 UNC PL
40	1	503898	WELD, NOVA METER REDUCTION - PWM MOUNT
41	6	250550	WASHER, FLAT 5/8 IN GR8 PL
42	2	250630	SCREW, SET - 1/4 X 3/8 UNC
43	6	250740	SCREW, SET - 5/16 X 3/8 IN UNC PL

Tow Between Canola Gear Reduction Drive
Part Number: 503853-1

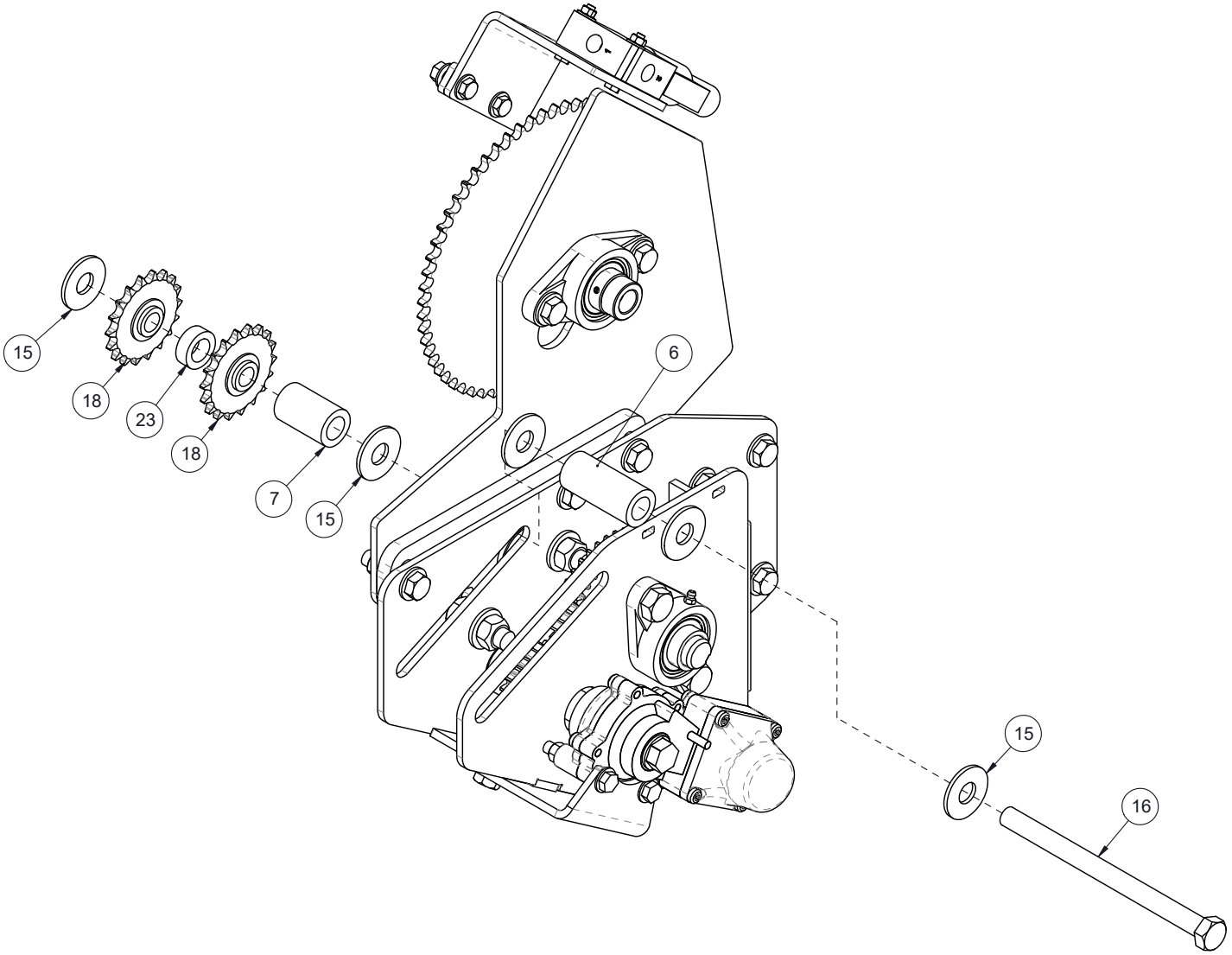

Australian Canola Gear Reduction Drive

Item	Qty.	Part No.	Description
1	1	504100	WELD, STANDARD METER DRIVE - NOVA SERIES II
2	1	260717	MOTOR, HYD - OMNISEED - 7/8 HEX - RAVEN
3	1	503861-1	SHAFT, 1IN - PRIMARY - METER DRIVE - NOVA SERIES II
4	4	250872	BEARING, FLANGE - NOVA SERIES II - 1" SFT - UCFL205-100D1
5	1	503862-1	SHAFT, 1IN - SECONDARY - METER DRIVE - NOVA SERIES II
6	1	503863	PIPE, IDLER SPACER 1 - NOVA SERIES II
7	1	503864-1	PIPE, IDLER SPACER 2 - NOVA SERIES II
8	6	222514	BOLT, HEX - 5/8 X 1 3/4 IN UNF GR8 PL
9	7	250500	NUT, LOCK 5/8 UNC - STOVER - PL
10	6	250001	BOLT, HEX 1/2 X 1 1/2 IN GR5 PL
11	16	250555	WASHER, FLAT - 1/2 IN - GR8 - PL
12	11	250504	NUT, LOCK - 1/2 UNC - STOVER - PL
13	2	250077	BOLT, HEX 3/8 X 2 1/2 IN GR5 PL
14	6	250557	WASHER, FLAT - 3/8 IN GR8 PL
15	5	250562	WASHER, FLAT 5/8 IN PL
16	1	250150	BOLT, HEX 5/8 X 8 UNC GR5 PL
17	2	250503	NUT, LOCK - 3/8 UNC - STOVER - PL
18	2	503888	SPROCKET, IDLER - 40T18 - 5/8 ID - NOVA SERIES II
19	2	503865	KEY, 1/4 X 1/4 X 2-1/16 IN
20	1	402948	KEY, 1/4 X 1/4 X 1 1/2 IN
21	1	503866	GEAR, DRIVE SHAFT - 20T - NOVA SERIES II
22	1	503875	GEAR, METER DRIVE - 60T
23	1	503868	PIPE, IDLER SPACER 3 - NOVA SERIES II
24	1	503871-1	PLATE, 1/4 IN - MOTOR MOUNT - CHAIN REDUCTION - NOVA SERIES II
25	1	503893-2	WELD, COMMON DRIVE SUPPORT - CHAIN REDUCTION - NOVA SERIES II
26	3	250048	BOLT, HEX 1/2 X 2 IN GR5 PL
27	2	250013	BOLT, HEX 1/2 X 1 1/4 IN GR5 PL
28	2	250019	BOLT, HEX 3/8 X 1 1/4 IN GR5 PL
29	2	250453	NUT, HEX - 3/8 UNC PL
30	1	503959	ADAPTOR, 5/8 IN HEX TO 1 IN BORE - CHAIN REDUCTION
31	1	503884	WELD, SPROCKET - 40T15 AND 40T28 - 1 IN BORE
32	1	503879	WELD, 36 TOOTH SPROCKET - 5/8 HEX - NOVA SERIES II
33	1	250643-1	BUSHING, NOVA METER - 5/8 HEX - J4
34	1	503886	WELD, 60 TOOTH SPROCKET - 5/8 HEX - NOVA SERIES II
35	1	250682	COLLAR, SFT 3/4 IN - SET SCREW - PL
36	1	260874	VALVE, PWM - OMNISEED - C/W MANIFOLD - MAN. O/R
37	2	250081	BOLT, HEX 1/4 X 1 3/4 IN - GR5 PL
38	2	250559	WASHER, FLAT - 1/4 IN PL
39	2	250458	NUT, HEX - 1/4 UNC PL
40	2	250630	SCREW, SET - 1/4 X 3/8 UNC
41	1	503898	WELD, NOVA METER REDUCTION - PWM MOUNT
42	6	250550	WASHER, FLAT 5/8 IN GR8 PL
43	6	250740	SCREW, SET - 5/16 X 3/8 IN UNC PL

Australian Canola Gear Reduction Drive
Part Number: 503352-1

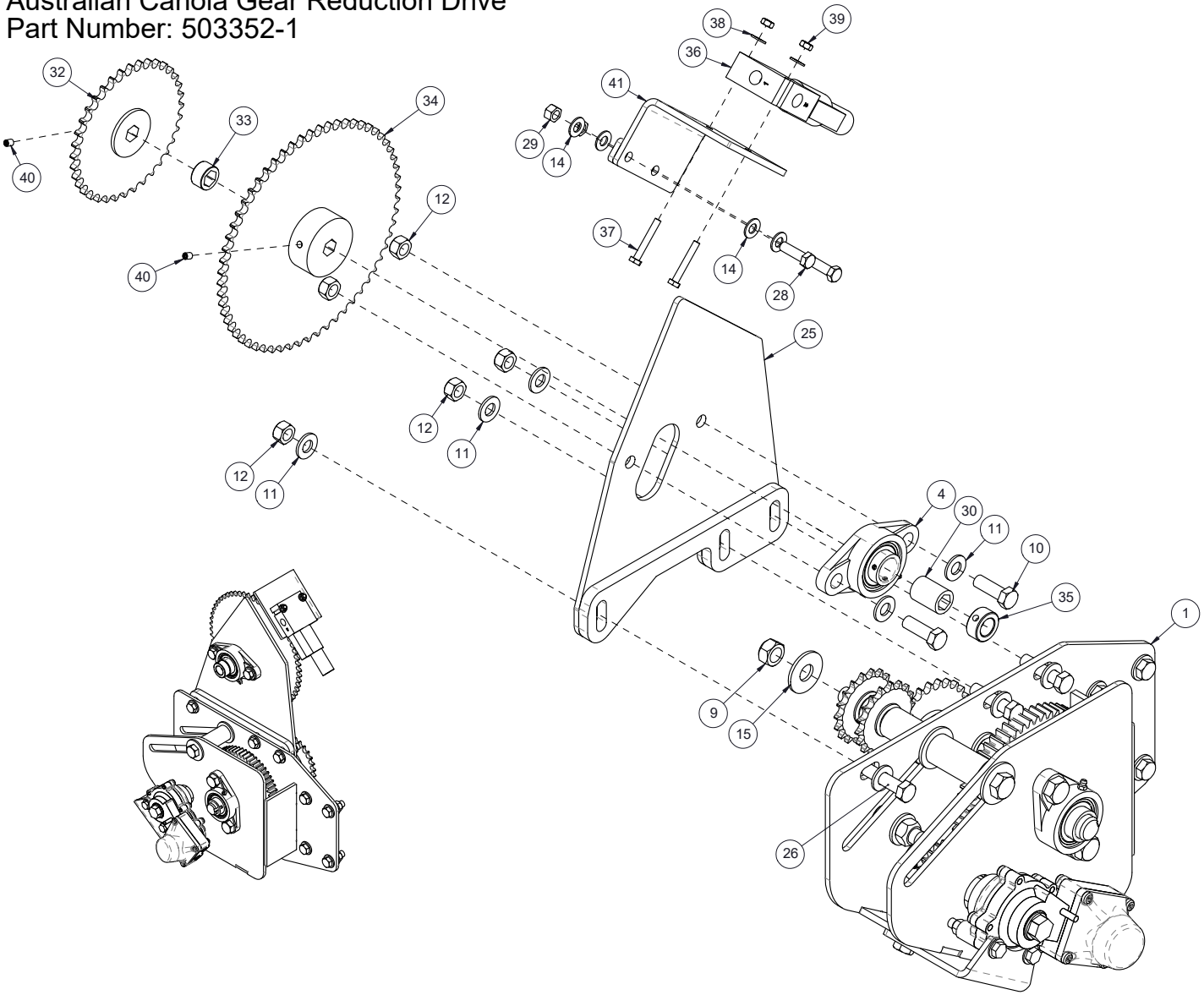

Australian Canola Gear Reduction Drive

Item	Qty.	Part No.	Description
1	1	504100	WELD, STANDARD METER DRIVE - NOVA SERIES II
2	1	260717	MOTOR, HYD - OMNISEED - 7/8 HEX - RAVEN
3	1	503861-1	SHAFT, 1IN - PRIMARY - METER DRIVE - NOVA SERIES II
4	4	250872	BEARING, FLANGE - NOVA SERIES II - 1" SFT - UCFL205-100D1
5	1	503862-1	SHAFT, 1IN - SECONDARY - METER DRIVE - NOVA SERIES II
6	1	503863	PIPE, IDLER SPACER 1 - NOVA SERIES II
7	1	503864-1	PIPE, IDLER SPACER 2 - NOVA SERIES II
8	6	222514	BOLT, HEX - 5/8 X 1 3/4 IN UNF GR8 PL
9	7	250500	NUT, LOCK 5/8 UNC - STOVER - PL
10	6	250001	BOLT, HEX 1/2 X 1 1/2 IN GR5 PL
11	16	250555	WASHER, FLAT - 1/2 IN - GR8 - PL
12	11	250504	NUT, LOCK - 1/2 UNC - STOVER - PL
13	2	250077	BOLT, HEX 3/8 X 2 1/2 IN GR5 PL
14	6	250557	WASHER, FLAT - 3/8 IN GR8 PL
15	5	250562	WASHER, FLAT 5/8 IN PL
16	1	250150	BOLT, HEX 5/8 X 8 UNC GR5 PL
17	2	250503	NUT, LOCK - 3/8 UNC - STOVER - PL
18	2	503888	SPROCKET, IDLER - 40T18 - 5/8 ID - NOVA SERIES II
19	2	503865	KEY, 1/4 X 1/4 X 2-1/16 IN
20	1	402948	KEY, 1/4 X 1/4 X 1 1/2 IN
21	1	503866	GEAR, DRIVE SHAFT - 20T - NOVA SERIES II
22	1	503875	GEAR, METER DRIVE - 60T
23	1	503868	PIPE, IDLER SPACER 3 - NOVA SERIES II
24	1	503871-1	PLATE, 1/4 IN - MOTOR MOUNT - CHAIN REDUCTION - NOVA SERIES II
25	1	503893-2	WELD, COMMON DRIVE SUPPORT - CHAIN REDUCTION - NOVA SERIES II
26	3	250048	BOLT, HEX 1/2 X 2 IN GR5 PL
27	2	250013	BOLT, HEX 1/2 X 1 1/4 IN GR5 PL
28	2	250019	BOLT, HEX 3/8 X 1 1/4 IN GR5 PL
29	2	250453	NUT, HEX - 3/8 UNC PL
30	1	503959	ADAPTOR, 5/8 IN HEX TO 1 IN BORE - CHAIN REDUCTION
31	1	503884	WELD, SPROCKET - 40T15 AND 40T28 - 1 IN BORE
32	1	503879	WELD, 36 TOOTH SPROCKET - 5/8 HEX - NOVA SERIES II
33	1	250643-1	BUSHING, NOVA METER - 5/8 HEX - J4
34	1	503886	WELD, 60 TOOTH SPROCKET - 5/8 HEX - NOVA SERIES II
35	1	250682	COLLAR, SFT 3/4 IN - SET SCREW - PL
36	1	260874	VALVE, PWM - OMNISEED - C/W MANIFOLD - MAN. O/R
37	2	250081	BOLT, HEX 1/4 X 1 3/4 IN - GR5 PL
38	2	250559	WASHER, FLAT - 1/4 IN PL
39	2	250458	NUT, HEX - 1/4 UNC PL
40	2	250630	SCREW, SET - 1/4 X 3/8 UNC
41	1	503898	WELD, NOVA METER REDUCTION - PWM MOUNT
42	6	250550	WASHER, FLAT 5/8 IN GR8 PL
43	6	250740	SCREW, SET - 5/16 X 3/8 IN UNC PL

Australian Canola Gear Reduction Drive
Part Number: 503352-1

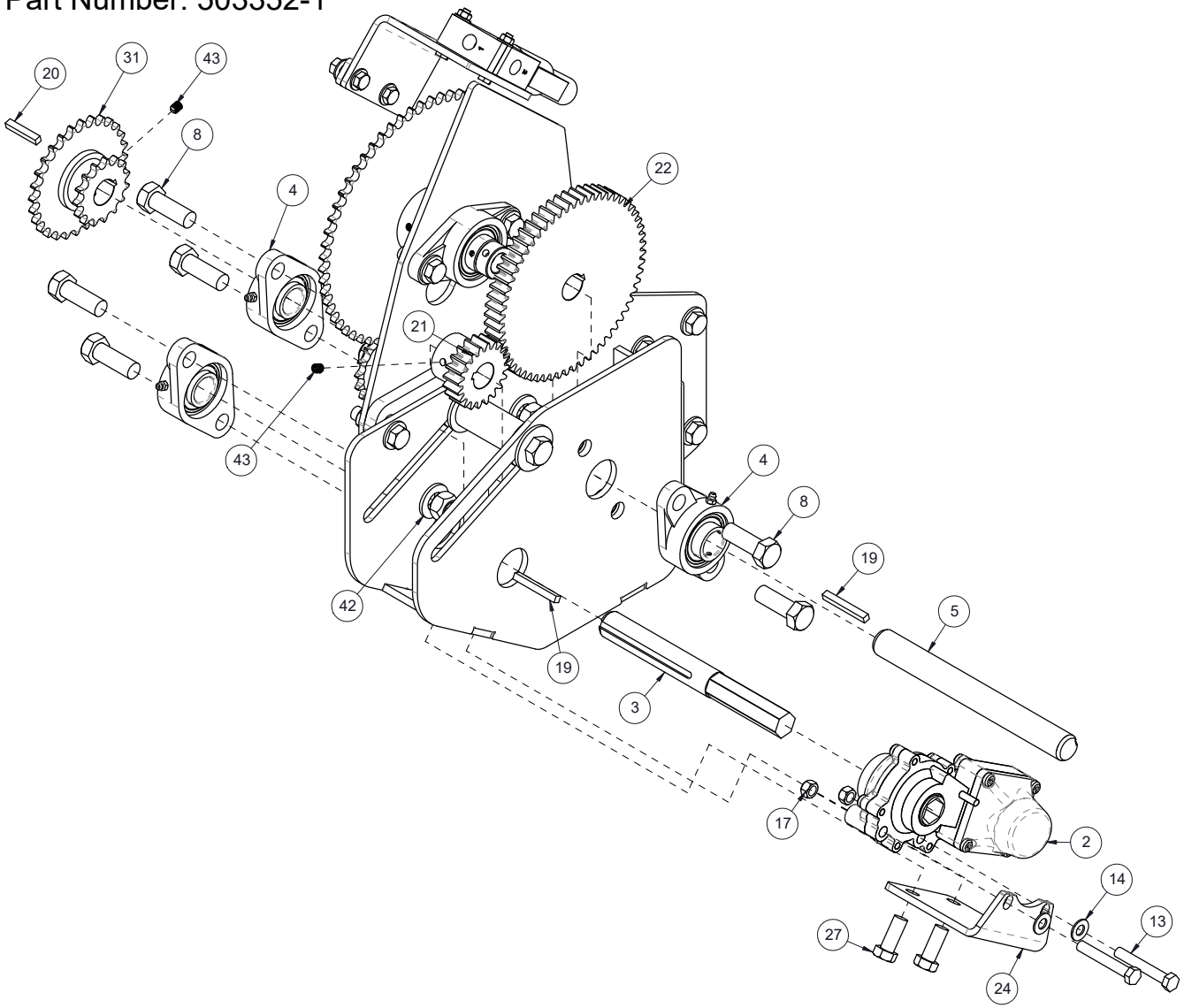

Australian Canola Gear Reduction Drive

Item	Qty.	Part No.	Description
1	1	504100	WELD, STANDARD METER DRIVE - NOVA SERIES II
2	1	260717	MOTOR, HYD - OMNISEED - 7/8 HEX - RAVEN
3	1	503861-1	SHAFT, 1IN - PRIMARY - METER DRIVE - NOVA SERIES II
4	4	250872	BEARING, FLANGE - NOVA SERIES II - 1" SFT - UCFL205-100D1
5	1	503862-1	SHAFT, 1IN - SECONDARY - METER DRIVE - NOVA SERIES II
6	1	503863	PIPE, IDLER SPACER 1 - NOVA SERIES II
7	1	503864-1	PIPE, IDLER SPACER 2 - NOVA SERIES II
8	6	222514	BOLT, HEX - 5/8 X 1 3/4 IN UNF GR8 PL
9	7	250500	NUT, LOCK 5/8 UNC - STOVER - PL
10	6	250001	BOLT, HEX 1/2 X 1 1/2 IN GR5 PL
11	16	250555	WASHER, FLAT - 1/2 IN - GR8 - PL
12	11	250504	NUT, LOCK - 1/2 UNC - STOVER - PL
13	2	250077	BOLT, HEX 3/8 X 2 1/2 IN GR5 PL
14	6	250557	WASHER, FLAT - 3/8 IN GR8 PL
15	5	250562	WASHER, FLAT 5/8 IN PL
16	1	250150	BOLT, HEX 5/8 X 8 UNC GR5 PL
17	2	250503	NUT, LOCK - 3/8 UNC - STOVER - PL
18	2	503888	SPROCKET, IDLER - 40T18 - 5/8 ID - NOVA SERIES II
19	2	503865	KEY, 1/4 X 1/4 X 2-1/16 IN
20	1	402948	KEY, 1/4 X 1/4 X 1 1/2 IN
21	1	503866	GEAR, DRIVE SHAFT - 20T - NOVA SERIES II
22	1	503875	GEAR, METER DRIVE - 60T
23	1	503868	PIPE, IDLER SPACER 3 - NOVA SERIES II
24	1	503871-1	PLATE, 1/4 IN - MOTOR MOUNT - CHAIN REDUCTION - NOVA SERIES II
25	1	503893-2	WELD, COMMON DRIVE SUPPORT - CHAIN REDUCTION - NOVA SERIES II
26	3	250048	BOLT, HEX 1/2 X 2 IN GR5 PL
27	2	250013	BOLT, HEX 1/2 X 1 1/4 IN GR5 PL
28	2	250019	BOLT, HEX 3/8 X 1 1/4 IN GR5 PL
29	2	250453	NUT, HEX - 3/8 UNC PL
30	1	503959	ADAPTOR, 5/8 IN HEX TO 1 IN BORE - CHAIN REDUCTION
31	1	503884	WELD, SPROCKET - 40T15 AND 40T28 - 1 IN BORE
32	1	503879	WELD, 36 TOOTH SPROCKET - 5/8 HEX - NOVA SERIES II
33	1	250643-1	BUSHING, NOVA METER - 5/8 HEX - J4
34	1	503886	WELD, 60 TOOTH SPROCKET - 5/8 HEX - NOVA SERIES II
35	1	250682	COLLAR, SFT 3/4 IN - SET SCREW - PL
36	1	260874	VALVE, PWM - OMNISEED - C/W MANIFOLD - MAN. O/R
37	2	250081	BOLT, HEX 1/4 X 1 3/4 IN - GR5 PL
38	2	250559	WASHER, FLAT - 1/4 IN PL
39	2	250458	NUT, HEX - 1/4 UNC PL
40	2	250630	SCREW, SET - 1/4 X 3/8 UNC
41	1	503898	WELD, NOVA METER REDUCTION - PWM MOUNT
42	6	250550	WASHER, FLAT 5/8 IN GR8 PL
43	6	250740	SCREW, SET - 5/16 X 3/8 IN UNC PL

Australian Canola Gear Reduction Drive
Part Number: 503352-1

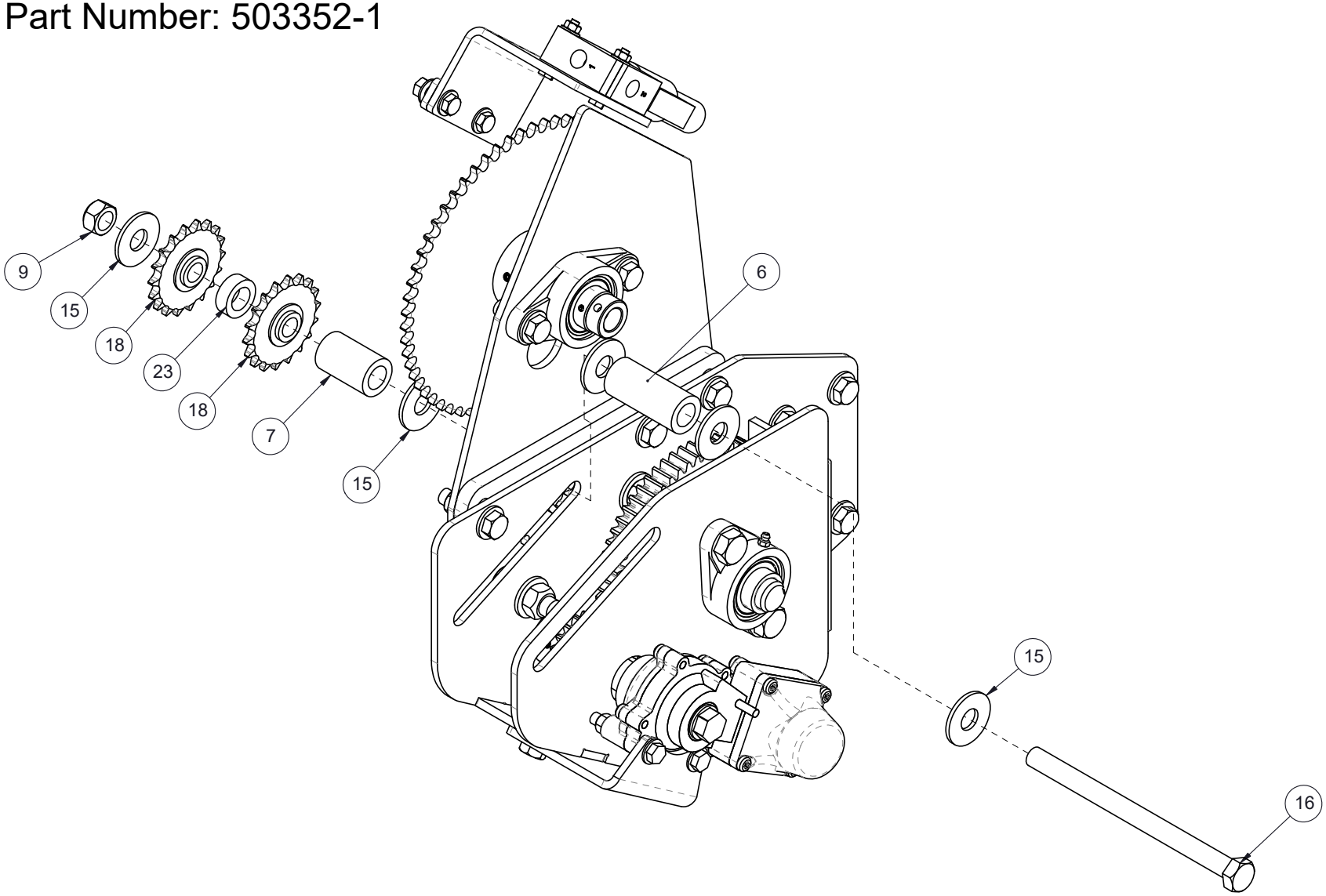

Australian Tow Between Canola Gear Reduction Drive

Item	Qty.	Part No.	Description
1	1	504100	WELD, STANDARD METER DRIVE - NOVA SERIES II
2	1	260717	MOTOR, HYD - OMNISEED - 7/8 HEX - RAVEN
3	1	503861-1	SHAFT, 1IN - PRIMARY - METER DRIVE - NOVA SERIES II
4	4	250872	BEARING, FLANGE - NOVA SERIES II - 1" SFT - UCFL205-100D1
5	1	503862-1	SHAFT, 1IN - SECONDARY - METER DRIVE - NOVA SERIES II
6	1	503863	PIPE, IDLER SPACER 1 - NOVA SERIES II
7	1	503864-1	PIPE, IDLER SPACER 2 - NOVA SERIES II
8	6	222514	BOLT, HEX - 5/8 X 1 3/4 IN UNF GR8 PL
9	7	250500	NUT, LOCK 5/8 UNC - STOVER - PL
10	6	250001	BOLT, HEX 1/2 X 1 1/2 IN GR5 PL
11	16	250555	WASHER, FLAT - 1/2 IN - GR8 - PL
12	11	250504	NUT, LOCK - 1/2 UNC - STOVER - PL
13	2	250077	BOLT, HEX 3/8 X 2 1/2 IN GR5 PL
14	6	250557	WASHER, FLAT - 3/8 IN GR8 PL
15	5	250562	WASHER, FLAT 5/8 IN PL
16	1	250150	BOLT, HEX 5/8 X 8 UNC GR5 PL
17	2	250503	NUT, LOCK - 3/8 UNC - STOVER - PL
18	2	503888	SPROCKET, IDLER - 40T18 - 5/8 ID - NOVA SERIES II
19	2	503865	KEY, 1/4 X 1/4 X 2-1/16 IN
20	1	402948	KEY, 1/4 X 1/4 X 1 1/2 IN
21	1	503866	GEAR, DRIVE SHAFT - 20T - NOVA SERIES II
22	1	503875	GEAR, METER DRIVE - 60T
23	1	503868	PIPE, IDLER SPACER 3 - NOVA SERIES II
24	1	503871-1	PLATE, 1/4 IN - MOTOR MOUNT - CHAIN REDUCTION - NOVA SERIES II
25	1	503248-2	WELD, TBT COMMON DRIVE SUPPORT - CHAIN REDUCTION - NOVA SERIE
26	3	250048	BOLT, HEX 1/2 X 2 IN GR5 PL
27	2	250013	BOLT, HEX 1/2 X 1 1/4 IN GR5 PL
28	2	250019	BOLT, HEX 3/8 X 1 1/4 IN GR5 PL
29	2	250453	NUT, HEX - 3/8 UNC PL
30	1	503959	ADAPTOR, 5/8 IN HEX TO 1 IN BORE - CHAIN REDUCTION
31	1	503884	WELD, SPROCKET - 40T15 AND 40T28 - 1 IN BORE
32	1	503879	WELD, 36 TOOTH SPROCKET - 5/8 HEX - NOVA SERIES II
33	1	250643-1	BUSHING, NOVA METER - 5/8 HEX - J4
34	1	503886	WELD, 60 TOOTH SPROCKET - 5/8 HEX - NOVA SERIES II
35	1	250682	COLLAR, SFT 3/4 IN - SET SCREW - PL
36	1	260874	VALVE, PWM - OMNISEED - C/W MANIFOLD - MAN. O/R
37	2	250081	BOLT, HEX 1/4 X 1 3/4 IN - GR5 PL
38	2	250559	WASHER, FLAT - 1/4 IN PL
39	2	250458	NUT, HEX - 1/4 UNC PL
40	6	250740	SCREW, SET - 5/16 X 3/8 IN UNC PL
41	1	503898	WELD, NOVA METER REDUCTION - PWM MOUNT
42	6	250550	WASHER, FLAT 5/8 IN GR8 PL
43	2	250630	SCREW, SET - 1/4 X 3/8 UNC

Australian Tow Between Canola Gear Reduction Drive
Part Number: 503897-1

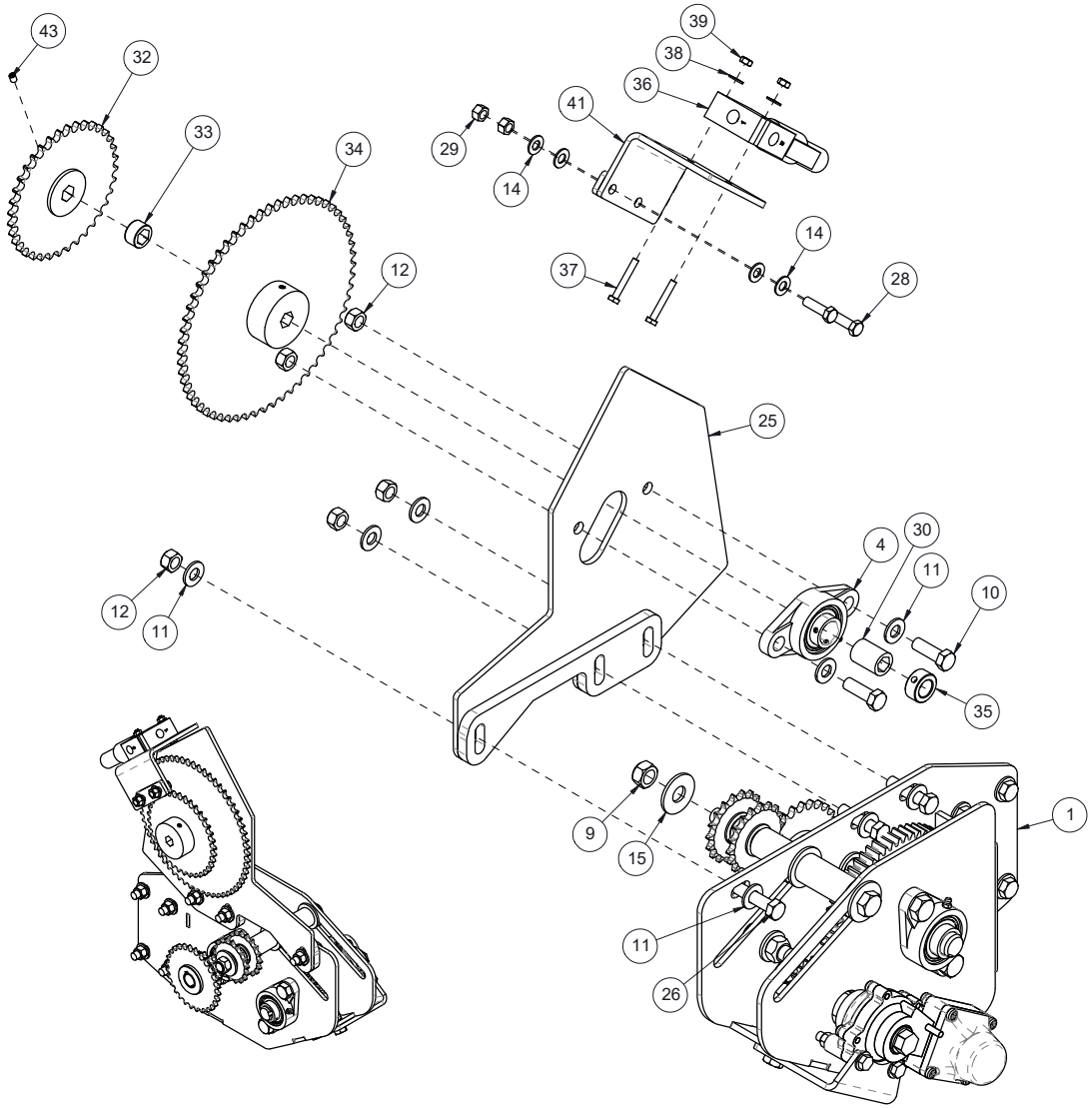

Australian Tow Between Canola Gear Reduction Drive

Item	Qty.	Part No.	Description
1	1	504100	WELD, STANDARD METER DRIVE - NOVA SERIES II
2	1	260717	MOTOR, HYD - OMNISEED - 7/8 HEX - RAVEN
3	1	503861-1	SHAFT, 1IN - PRIMARY - METER DRIVE - NOVA SERIES II
4	4	250872	BEARING, FLANGE - NOVA SERIES II - 1" SFT - UCFL205-100D1
5	1	503862-1	SHAFT, 1IN - SECONDARY - METER DRIVE - NOVA SERIES II
6	1	503863	PIPE, IDLER SPACER 1 - NOVA SERIES II
7	1	503864-1	PIPE, IDLER SPACER 2 - NOVA SERIES II
8	6	222514	BOLT, HEX - 5/8 X 1 3/4 IN UNF GR8 PL
9	7	250500	NUT, LOCK 5/8 UNC - STOVER - PL
10	6	250001	BOLT, HEX 1/2 X 1 1/2 IN GR5 PL
11	16	250555	WASHER, FLAT - 1/2 IN - GR8 - PL
12	11	250504	NUT, LOCK - 1/2 UNC - STOVER - PL
13	2	250077	BOLT, HEX 3/8 X 2 1/2 IN GR5 PL
14	6	250557	WASHER, FLAT - 3/8 IN GR8 PL
15	5	250562	WASHER, FLAT 5/8 IN PL
16	1	250150	BOLT, HEX 5/8 X 8 UNC GR5 PL
17	2	250503	NUT, LOCK - 3/8 UNC - STOVER - PL
18	2	503888	SPROCKET, IDLER - 40T18 - 5/8 ID - NOVA SERIES II
19	2	503865	KEY, 1/4 X 1/4 X 2-1/16 IN
20	1	402948	KEY, 1/4 X 1/4 X 1 1/2 IN
21	1	503866	GEAR, DRIVE SHAFT - 20T - NOVA SERIES II
22	1	503875	GEAR, METER DRIVE - 60T
23	1	503868	PIPE, IDLER SPACER 3 - NOVA SERIES II
24	1	503871-1	PLATE, 1/4 IN - MOTOR MOUNT - CHAIN REDUCTION - NOVA SERIES II
25	1	503248-2	WELD, TBT COMMON DRIVE SUPPORT - CHAIN REDUCTION - NOVA SERIE
26	3	250048	BOLT, HEX 1/2 X 2 IN GR5 PL
27	2	250013	BOLT, HEX 1/2 X 1 1/4 IN GR5 PL
28	2	250019	BOLT, HEX 3/8 X 1 1/4 IN GR5 PL
29	2	250453	NUT, HEX - 3/8 UNC PL
30	1	503959	ADAPTOR, 5/8 IN HEX TO 1 IN BORE - CHAIN REDUCTION
31	1	503884	WELD, SPROCKET - 40T15 AND 40T28 - 1 IN BORE
32	1	503879	WELD, 36 TOOTH SPROCKET - 5/8 HEX - NOVA SERIES II
33	1	250643-1	BUSHING, NOVA METER - 5/8 HEX - J4
34	1	503886	WELD, 60 TOOTH SPROCKET - 5/8 HEX - NOVA SERIES II
35	1	250682	COLLAR, SFT 3/4 IN - SET SCREW - PL
36	1	260874	VALVE, PWM - OMNISEED - C/W MANIFOLD - MAN. O/R
37	2	250081	BOLT, HEX 1/4 X 1 3/4 IN - GR5 PL
38	2	250559	WASHER, FLAT - 1/4 IN PL
39	2	250458	NUT, HEX - 1/4 UNC PL
40	6	250740	SCREW, SET - 5/16 X 3/8 IN UNC PL
41	1	503898	WELD, NOVA METER REDUCTION - PWM MOUNT
42	6	250550	WASHER, FLAT 5/8 IN GR8 PL
43	2	250630	SCREW, SET - 1/4 X 3/8 UNC

Australian Tow Between Canola Gear Reduction Drive
Part Number: 503897-1

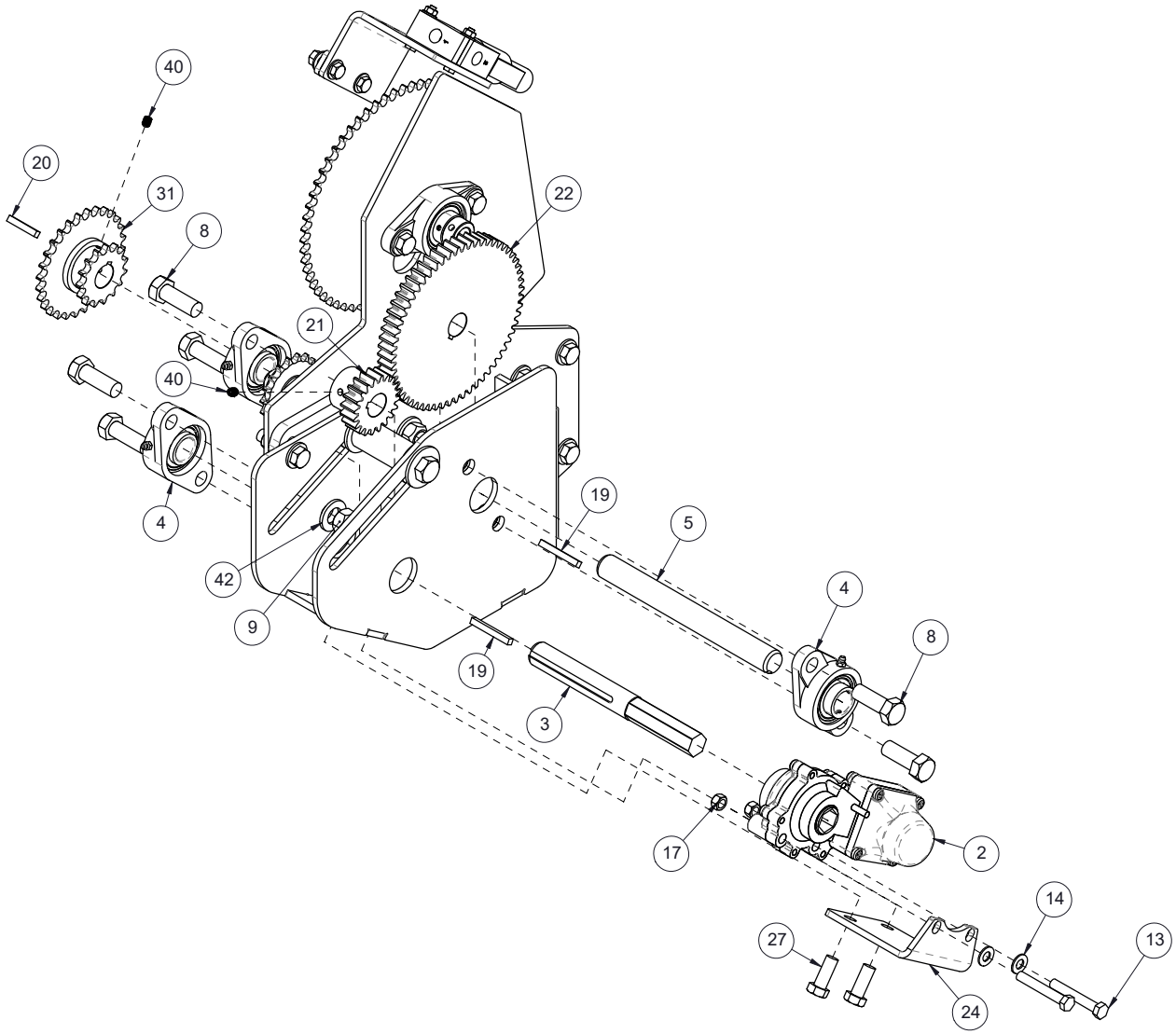

Australian Tow Between Canola Gear Reduction Drive

Item	Qty.	Part No.	Description
1	1	504100	WELD, STANDARD METER DRIVE - NOVA SERIES II
2	1	260717	MOTOR, HYD - OMNISEED - 7/8 HEX - RAVEN
3	1	503861-1	SHAFT, 1IN - PRIMARY - METER DRIVE - NOVA SERIES II
4	4	250872	BEARING, FLANGE - NOVA SERIES II - 1" SFT - UCFL205-100D1
5	1	503862-1	SHAFT, 1IN - SECONDARY - METER DRIVE - NOVA SERIES II
6	1	503863	PIPE, IDLER SPACER 1 - NOVA SERIES II
7	1	503864-1	PIPE, IDLER SPACER 2 - NOVA SERIES II
8	6	222514	BOLT, HEX - 5/8 X 1 3/4 IN UNF GR8 PL
9	7	250500	NUT, LOCK 5/8 UNC - STOVER - PL
10	6	250001	BOLT, HEX 1/2 X 1 1/2 IN GR5 PL
11	16	250555	WASHER, FLAT - 1/2 IN - GR8 - PL
12	11	250504	NUT, LOCK - 1/2 UNC - STOVER - PL
13	2	250077	BOLT, HEX 3/8 X 2 1/2 IN GR5 PL
14	6	250557	WASHER, FLAT - 3/8 IN GR8 PL
15	5	250562	WASHER, FLAT 5/8 IN PL
16	1	250150	BOLT, HEX 5/8 X 8 UNC GR5 PL
17	2	250503	NUT, LOCK - 3/8 UNC - STOVER - PL
18	2	503888	SPROCKET, IDLER - 40T18 - 5/8 ID - NOVA SERIES II
19	2	503865	KEY, 1/4 X 1/4 X 2-1/16 IN
20	1	402948	KEY, 1/4 X 1/4 X 1 1/2 IN
21	1	503866	GEAR, DRIVE SHAFT - 20T - NOVA SERIES II
22	1	503875	GEAR, METER DRIVE - 60T
23	1	503868	PIPE, IDLER SPACER 3 - NOVA SERIES II
24	1	503871-1	PLATE, 1/4 IN - MOTOR MOUNT - CHAIN REDUCTION - NOVA SERIES II
25	1	503248-2	WELD, TBT COMMON DRIVE SUPPORT - CHAIN REDUCTION - NOVA SERIE
26	3	250048	BOLT, HEX 1/2 X 2 IN GR5 PL
27	2	250013	BOLT, HEX 1/2 X 1 1/4 IN GR5 PL
28	2	250019	BOLT, HEX 3/8 X 1 1/4 IN GR5 PL
29	2	250453	NUT, HEX - 3/8 UNC PL
30	1	503959	ADAPTOR, 5/8 IN HEX TO 1 IN BORE - CHAIN REDUCTION
31	1	503884	WELD, SPROCKET - 40T15 AND 40T28 - 1 IN BORE
32	1	503879	WELD, 36 TOOTH SPROCKET - 5/8 HEX - NOVA SERIES II
33	1	250643-1	BUSHING, NOVA METER - 5/8 HEX - J4
34	1	503886	WELD, 60 TOOTH SPROCKET - 5/8 HEX - NOVA SERIES II
35	1	250682	COLLAR, SFT 3/4 IN - SET SCREW - PL
36	1	260874	VALVE, PWM - OMNISEED - C/W MANIFOLD - MAN. O/R
37	2	250081	BOLT, HEX 1/4 X 1 3/4 IN - GR5 PL
38	2	250559	WASHER, FLAT - 1/4 IN PL
39	2	250458	NUT, HEX - 1/4 UNC PL
40	6	250740	SCREW, SET - 5/16 X 3/8 IN UNC PL
41	1	503898	WELD, NOVA METER REDUCTION - PWM MOUNT
42	6	250550	WASHER, FLAT 5/8 IN GR8 PL
43	2	250630	SCREW, SET - 1/4 X 3/8 UNC

Australian Tow Between Canola Gear Reduction Drive
Part Number: 503897-1

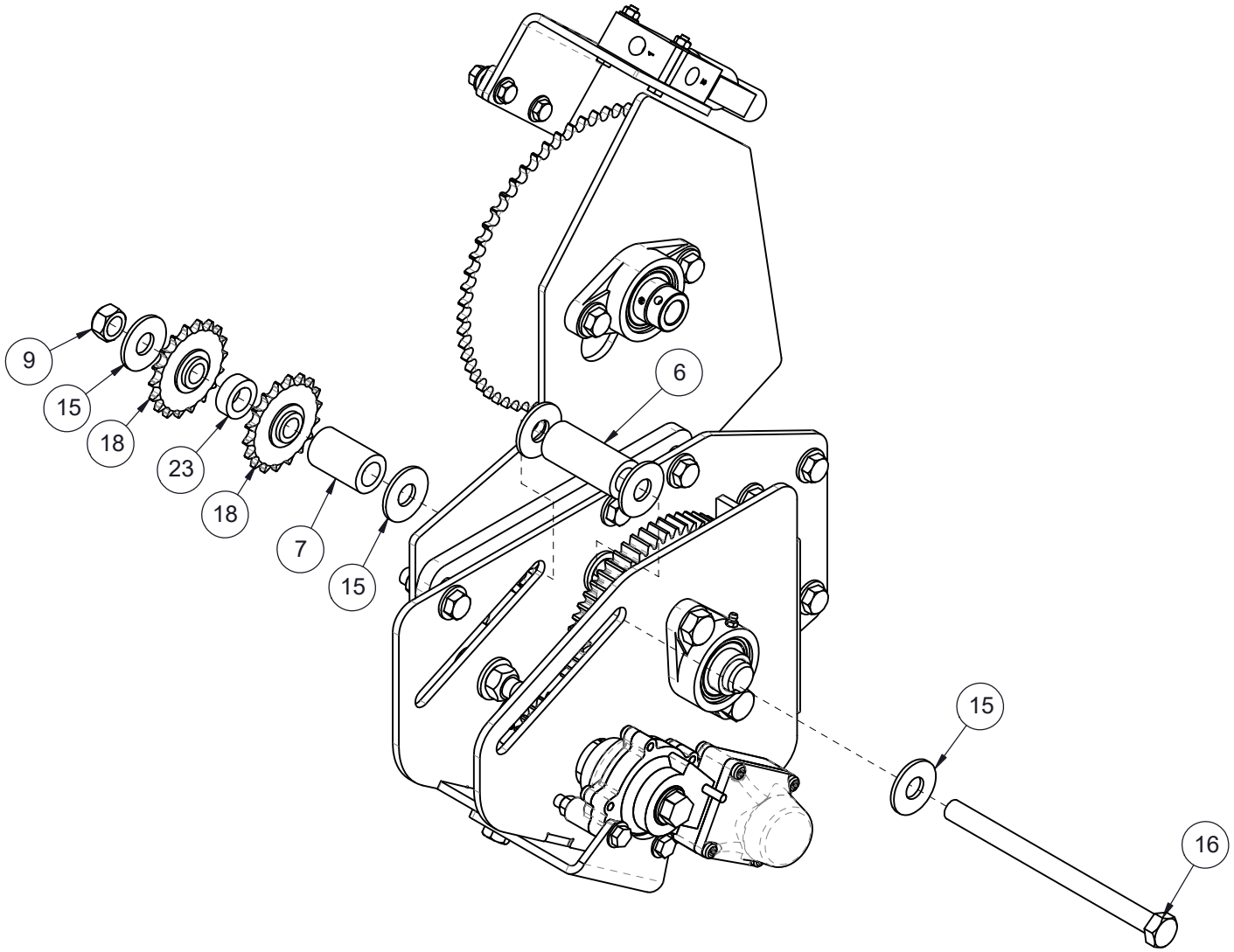

Raven Hydraulic Meter Motor

Item	Qty.	Part No.	Description	Item	Qty.	Part No.	Description
1	1	260824	SPEED SENSOR, HYD MOTOR - OMNISEED				
2	1	260805	KIT, SEAL				
-	0	260717	MOTOR, HYD - OMNISEED - 7/8 HEX - RAVEN				

Raven Hydraulic Meter Motor
Part Number: 260717

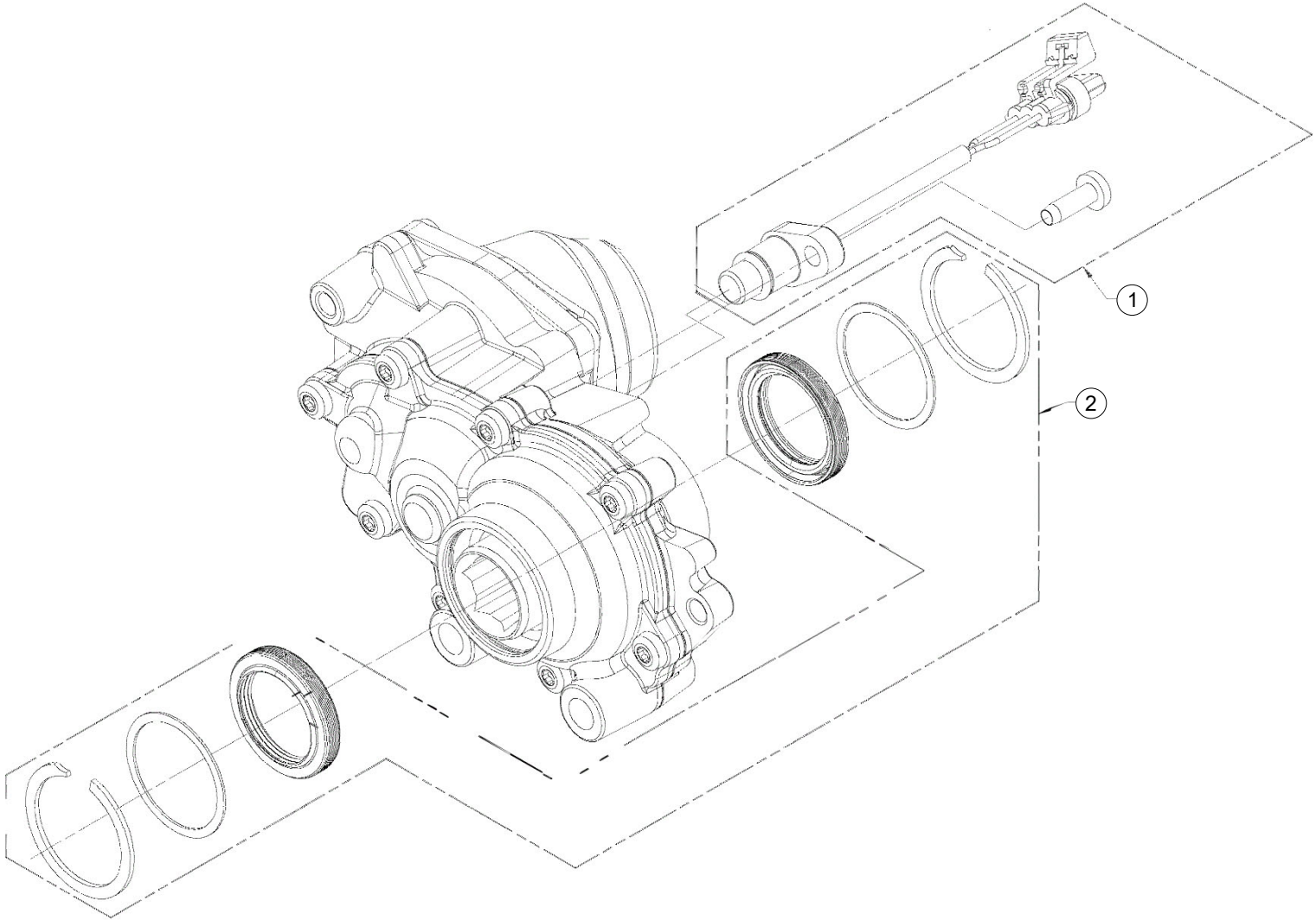

Tank to Meter Transition

Item	Qty.	Part No.	Description	Item	Qty.	Part No.	Description
1	1	500401-5	ASSY, TRANSITION - TANK TO METER - NOVA - BLK				
2	10	500416-2	ASSY, SERVICE SLOT RETAINING BOLT - STAINLESS - NOVA				
3	2	500425-1	PLATE, CENTERING GUIDE 3/8 IN - NOVA - BLK				
4	40	250140	BOLT, CARRIAGE - 3/8 X 1 3/4IN UND GR5 PL				
5	4	250108	BOLT, CARRIAGE - 3/8 X 1 1/2IN UND GR5 PL				
6	44	250566	WASHER, FLAT - 3/8 IN PL				
7	44	250453	NUT, HEX - 3/8 UNC PL				
8	4	250658	SCREW, TEK - 1/4 X 1 IN				
9	8	250109	BOLT, CARRIAGE - 3/8 X 1 1/4 IN UNC - STAINLESS				
10	8	250569	WASHER, FLAT - 3/8 IN SS				
11	8	250464	NUT, HEX - 3/8 UNC GR5 JS500				
12	2	501250-2	SHEET, FRMD 10 GA - DIVIDER - 8 OUTLET - BLK				
13	2	501253	PLATE, METER BLOCKER - BOTTOM - NOVA NOT USED IN 503100-1				

Tank to Meter Transition
Part Number: 500400-2 - 10 Zone
501249-2 - 08 Zone

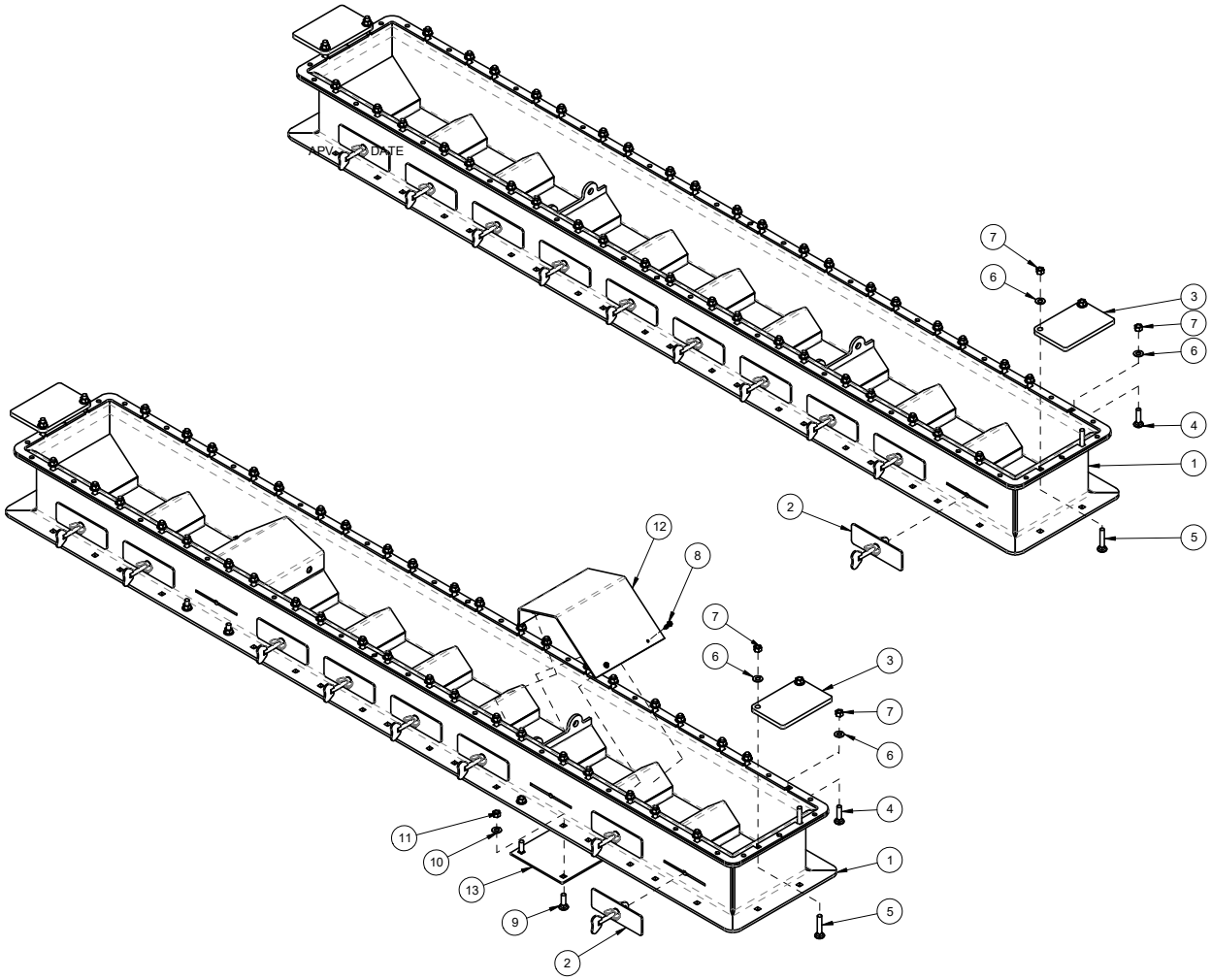

40 BU Canola Nova Tank

Item	Qty.	Part No.	Description	Item	Qty.	Part No.	Description
1	1	500661-9	ASSY, CANOLA TANK - 40BU - NOVA - YEL				
2	1	500685-2	ASSY, CANOLA TANK LID ARM - NOVA - BLK				
3	1	500695-2	ASSY, CANOLA TANK LID - NOVA - BLK				
4	2	500690-2	ASSY, HINGE PIN-3/4 X 23 3/8 IN - CANOLA TANK LID-BLK				
5	1	258551	CYL, HYD 2 X 4 IN - FILL AUGER				
6	8	500416-2	ASSY, SERVICE SLOT RETAINING BOLT - STAINLESS - NOVA				
7	1	500835-1	ASSY, CANOLA TANK SCREEN - NOVA - YEL				
8	2	501252-1	SHEET, FRMD 10 GA - DIVIDER - 8 OUTLET CANOLA TANK				
9	2	501253	PLATE, METER BLOCKER - BOTTOM - NOVA NOT USED IN 503100-1				
10	8	250109	BOLT, CARRIAGE - 3/8 X 1 1/4 IN UNC - STAINLESS				
11	8	250569	WASHER, FLAT - 3/8 IN SS				
12	2	250552	WASHER, FLAT 3/4IN GR8 PL				
13	2	250599	PIN, SPRING - 3/16 X 1 IN				
14	8	250658	SCREW, TEK - 1/4 X 1 IN				
15	8	250464	NUT, HEX - 3/8 UNC GR5 JS500				
16	6	250034	BOLT, HEX 5/8 X 2 1/2 UNC GR8 PL				
17	12	250459	NUT, JAM - 5/8 UNC - PL				

40 BU Canola Nova Tank

Part Number: 500660 - 10 Zone
500655 - 08 Zone

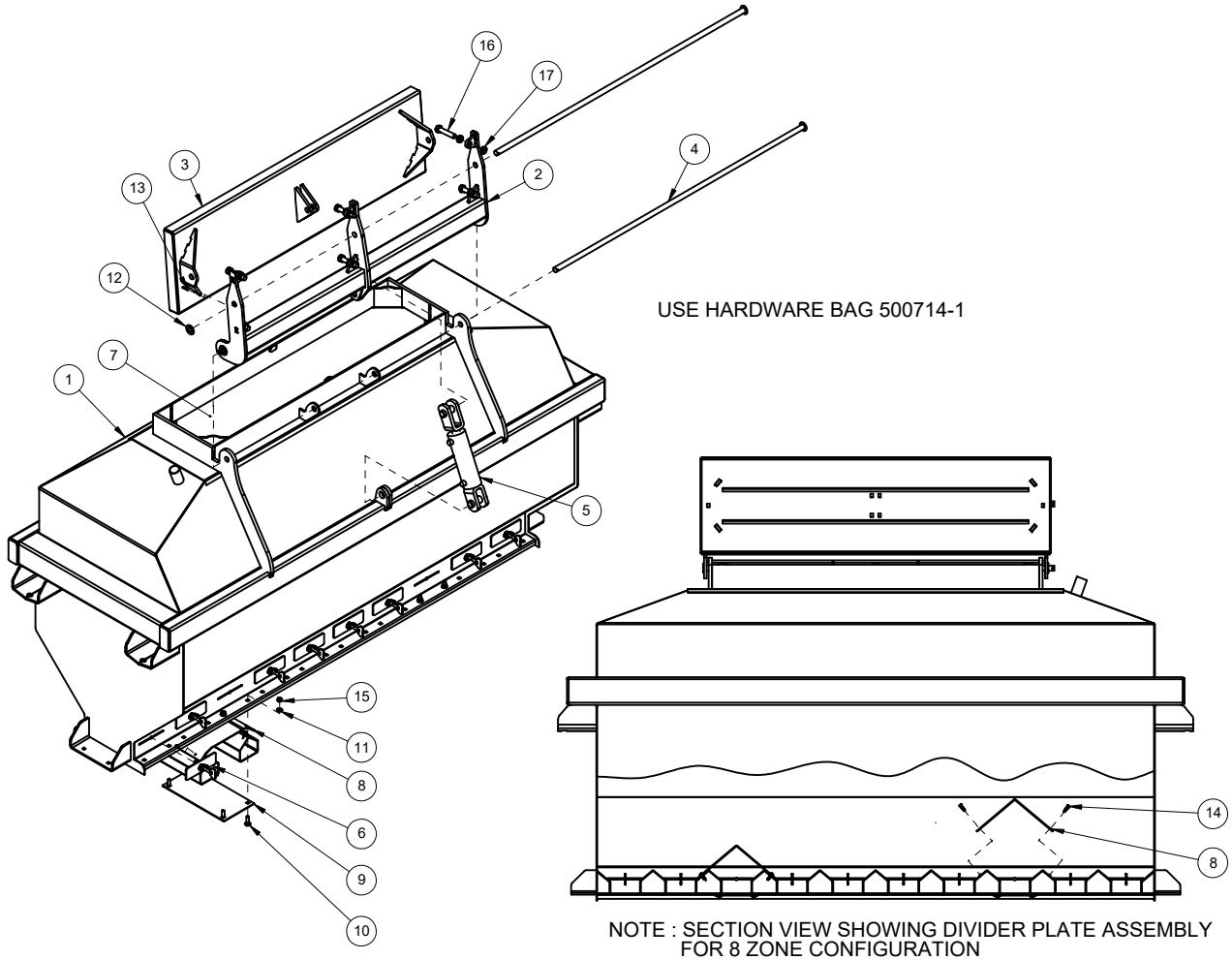

USE HARDWARE BAG 500714-1

NOTE : SECTION VIEW SHOWING DIVIDER PLATE ASSEMBLY
FOR 8 ZONE CONFIGURATION

110 BU Tow Between Nova Tank

Item	Qty.	Part No.	Description	Item	Qty.	Part No.	Description
1	1	503130-3	ASSY, BTM SECTION - 110BU TANK - T/B NOVA - YEL				
2	1	503125-1	ASSY, MID SECTION - 110BU TANK - T/B NOVA - YEL				
3	1	503110-4	ASSY, TOP SECTION - 110BU TANK - T/B NOVA - YEL				
4	4	503198	ASSY, HINGE PIN - 110BU TANK - T/B NOVA - BLK				
5	1	503150-4	ASSY, LID ARM - 110BU TANK - T/B NOVA - BLK				
6	2	258551	CYL, HYD 2 X 4 IN - FILL AUGER				
7	1	503145-2	ASSY, LID - 110BU TANK - T/B NOVA - BLK				
8	1	503155	ASSY, HINGE PIN - 110BU TANK - T/B NOVA - BLK				
9	1	503180	ASSY, REAR WALKWAY - 110BU TANK - T/B NOVA - BLK				
10	2	503184	PLATE, FRMD - 1/4 IN - R.H. STEP - 110BU TANK - T/B NOVA - BLK				
11	2	503183	PLATE, FRMD - 1/4 IN - L.H. STEP - 110BU TANK - T/B NOVA - BLK				
12	2	501640	ASSY, STEP - BETWEEN TANK STEP - NOVA - BLK				
13	1	503170	ASSY, FRONT WALKWAY - 110BU TANK - T/B NOVA - BLK				
14	1	503160-1	ASSY - SCREEN - 110BU TANK - T/B NOVA - YEL				
15	40	403849	BUSH, 1.500 OD X .75 ID X 3/4 IN				
16	4	250094	BOLT, HEX 3/4 X 4 UNF GR5 PL				
17	36	403848	PLATE, SPACER 3/4 IN - AIR CART CRADLE MOUNT				
18	1	503190-2	ASSY, RIGHT LOAD CELL MOUNT - 110BU TANK - T/B NOVA - BLK				
19	1	503185-2	ASSY, LEFT LOAD CELL MOUNT - 110BU TANK - T/B NOVA - BLK				
20	4	270173	LOAD CELL - SCALE TEC - 1.5 SB SS 3MV/V DT-06				
21	118	250101	BOLT, CARRIAGE - 3/8 X 1 1/4 IN UNC GR5 PL				
22	104	250400	NUT, FLANGE - 3/8 UNC PL				
23	20	250552	WASHER, FLAT 3/4IN GR8 PL				
24	8	250082	BOLT, HEX 3/4 X 3 3/4 UNC GR5 PL				
25	8	250451	NUT, HEX 3/4 UNC GR5 PL				
26	22	250453	NUT, HEX - 3/8 UNC PL				
27	30	250557	WASHER, FLAT - 3/8 IN GR8 PL				
28	8	250036	BOLT, HEX 3/8 X 1 IN GR5 PL				
29	8	250109	BOLT, CARRIAGE - 3/8 X 1 1/4 IN UNC - STAINLESS				
30	8	250464	NUT, HEX - 3/8 UNC GR5 JS500				
31	8	250569	WASHER, FLAT - 3/8 IN SS				
32	8	250658	SCREW, TEK - 1/4 X 1 IN				
33	4	250554	WASHER, FLAT - 1 IN GR8 PL				
34	4	250681	PIN, SPRING - 3/16 X 1 IN				
35	8	250034	BOLT, HEX 5/8 X 2 1/2 UNC GR8 PL				
36	16	250459	NUT, JAM - 5/8 UNC - PL				
37	2	503141	SHEET, FRMD 10 GA - 8 ZONE DIVIDER - 110BU TANK - YEL NOT USED IN 5				
38	2	501253	PLATE, METER BLOCKER - BOTTOM - NOVA NOT USED IN 503100-1				
39	8	500416-2	ASSY, SERVICE SLOT RETAINING BOLT - STAINLESS - NOVA				

110 BU Tow Between Nova Tank
Part Number: 503100-1 - 10 Zone
503099-1 - 08 Zone

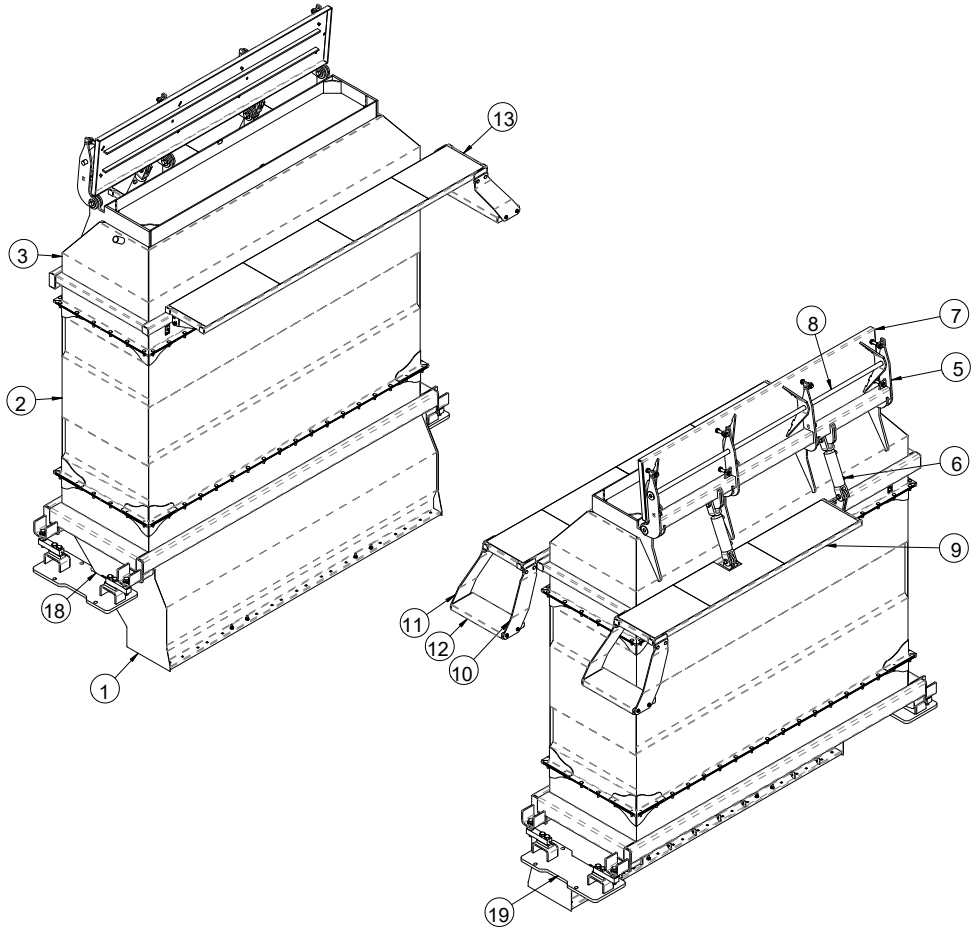

110 BU Tow Between Nova Tank

Item	Qty.	Part No.	Description	Item	Qty.	Part No.	Description
1	1	503130-3	ASSY, BTM SECTION - 110BU TANK - T/B NOVA - YEL				
2	1	503125-1	ASSY, MID SECTION - 110BU TANK - T/B NOVA - YEL				
3	1	503110-4	ASSY, TOP SECTION - 110BU TANK - T/B NOVA - YEL				
4	4	503198	ASSY, HINGE PIN - 110BU TANK - T/B NOVA - BLK				
5	1	503150-4	ASSY, LID ARM - 110BU TANK - T/B NOVA - BLK				
6	2	258551	CYL, HYD 2 X 4 IN - FILL AUGER				
7	1	503145-2	ASSY, LID - 110BU TANK - T/B NOVA - BLK				
8	1	503155	ASSY, HINGE PIN - 110BU TANK - T/B NOVA - BLK				
9	1	503180	ASSY, REAR WALKWAY - 110BU TANK - T/B NOVA - BLK				
10	2	503184	PLATE, FRMD - 1/4 IN - R.H. STEP - 110BU TANK - T/B NOVA - BLK				
11	2	503183	PLATE, FRMD - 1/4 IN - L.H. STEP - 110BU TANK - T/B NOVA - BLK				
12	2	501640	ASSY, STEP - BETWEEN TANK STEP - NOVA - BLK				
13	1	503170	ASSY, FRONT WALKWAY - 110BU TANK - T/B NOVA - BLK				
14	1	503160-1	ASSY - SCREEN - 110BU TANK - T/B NOVA - YEL				
15	40	403849	BUSH, 1.500 OD X .75 ID X 3/4 IN				
16	4	250094	BOLT, HEX 3/4 X 4 UNF GR5 PL				
17	36	403848	PLATE, SPACER 3/4 IN - AIR CART CRADLE MOUNT				
18	1	503190-2	ASSY, RIGHT LOAD CELL MOUNT - 110BU TANK - T/B NOVA - BLK				
19	1	503185-2	ASSY, LEFT LOAD CELL MOUNT - 110BU TANK - T/B NOVA - BLK				
20	4	270173	LOAD CELL - SCALE TEC - 1.5 SB SS 3MV/V DT-06				
21	118	250101	BOLT, CARRIAGE - 3/8 X 1 1/4 IN UNC GR5 PL				
22	104	250400	NUT, FLANGE - 3/8 UNC PL				
23	20	250552	WASHER, FLAT 3/4IN GR8 PL				
24	8	250082	BOLT, HEX 3/4 X 3 3/4 UNC GR5 PL				
25	8	250451	NUT, HEX 3/4 UNC GR5 PL				
26	22	250453	NUT, HEX - 3/8 UNC PL				
27	30	250557	WASHER, FLAT - 3/8 IN GR8 PL				
28	8	250036	BOLT, HEX 3/8 X 1 IN GR5 PL				
29	8	250109	BOLT, CARRIAGE - 3/8 X 1 1/4 IN UNC - STAINLESS				
30	8	250464	NUT, HEX - 3/8 UNC GR5 JS500				
31	8	250569	WASHER, FLAT - 3/8 IN SS				
32	8	250658	SCREW, TEK - 1/4 X 1 IN				
33	4	250554	WASHER, FLAT - 1 IN GR8 PL				
34	4	250681	PIN, SPRING - 3/16 X 1 IN				
35	8	250034	BOLT, HEX 5/8 X 2 1/2 UNC GR8 PL				
36	16	250459	NUT, JAM - 5/8 UNC - PL				
37	2	503141	SHEET, FRMD 10 GA - 8 ZONE DIVIDER - 110BU TANK - YEL NOT USED IN 5				
38	2	501253	PLATE, METER BLOCKER - BOTTOM - NOVA NOT USED IN 503100-1				
39	8	500416-2	ASSY, SERVICE SLOT RETAINING BOLT - STAINLESS - NOVA				

110 BU Tow Between Nova Tank

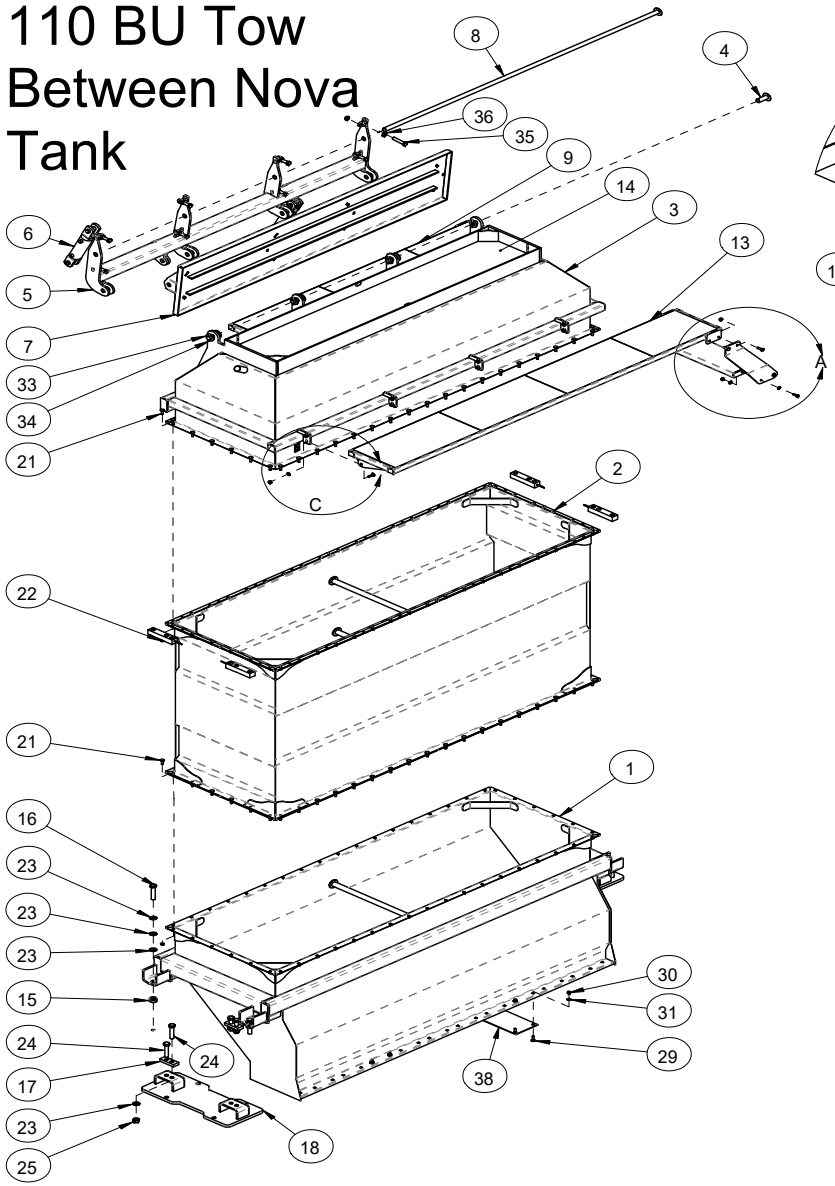

USE HARDWARE BAG 503101-1, 503102 AND 503103

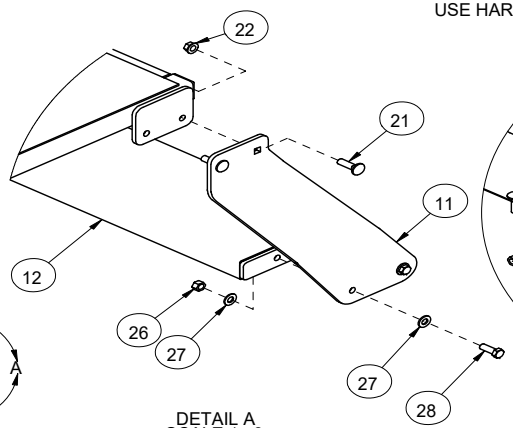

DETAIL A
SCALE 1 : 8

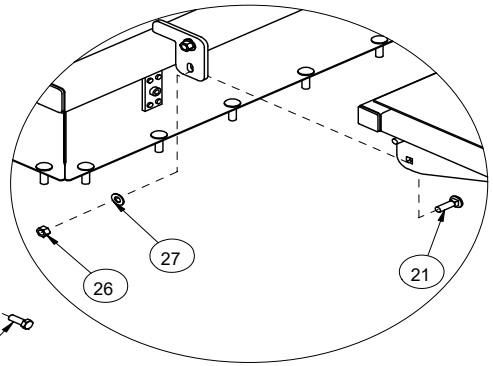

DETAIL C
SCALE 1 : 8

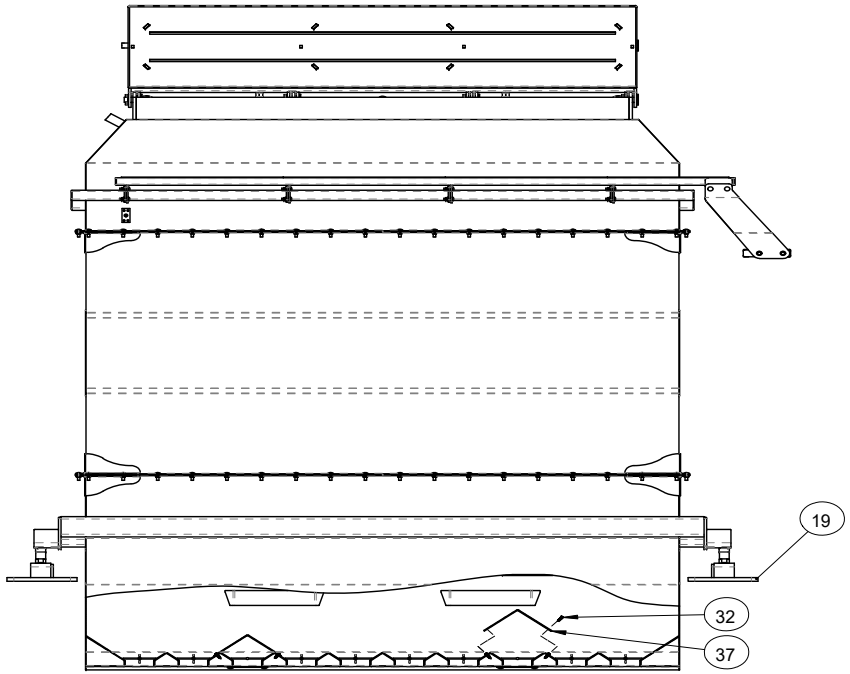

NOTE : SECTION VIEW SHOWING DIVIDER PLATE ASSEMBLY FOR 8 ZONE CONFIGURATION

Tank Cradle/Load Cells

Item	Qty.	Part No.	Description	Item	Qty.	Part No.	Description
1	4	500370-3	ASSY, LOAD CELL MOUNT - TANK CRADLE - NOVA - BLK				
2	4	270173	LOAD CELL - SCALE TEC - 1.5 SB SS 3MV/V DT-06				
3	2	500355-3	ASSY, CRADLE SLOPE - NOVA - BLK				
4	2	500365	ASSY, BEAM - SIDE - TANK CRADLE - NOVA - BLK				
5	2	500368	PLATE, BOLT 1/2 IN - CONNECTING PLATE - NOVA - BLK				
6	4	403848	PLATE, SPACER 3/4 IN - AIR CART CRADLE MOUNT				
7	4	403849	BUSH, 1.500 OD X .75 ID X 3/4 IN				
8	8	250231	BOLT, U-SQ - 3/4 UNC X 8 ID X 14 IN - 2 IN THD - GR8 PL				
9	32	250047	BOLT, HEX 5/8 X 2 UNC GR5 PL				
10	32	250455	NUT, HEX 5/8 UNC GR5 PL				
11	32	250550	WASHER, FLAT 5/8 IN GR8 PL				
12	36	250552	WASHER, FLAT 3/4IN GR8 PL				
13	24	250451	NUT, HEX 3/4 UNC GR5 PL				
14	8	250082	BOLT, HEX 3/4 X 3 3/4 UNC GR5 PL				
15	4	250094	BOLT, HEX 3/4 X 4 UNF GR5 PL				
16	2	250468	NUT, JAM - 3/4-16 UNF - PL				
17	1	250690	COLLAR, SPLIT 3/4 IN - LOAD CELL SPACER				

Tank Cradle/Load Cells
Part Number: 500350

USE HARDWARE BAG 403980, 500385 AND 500386-1

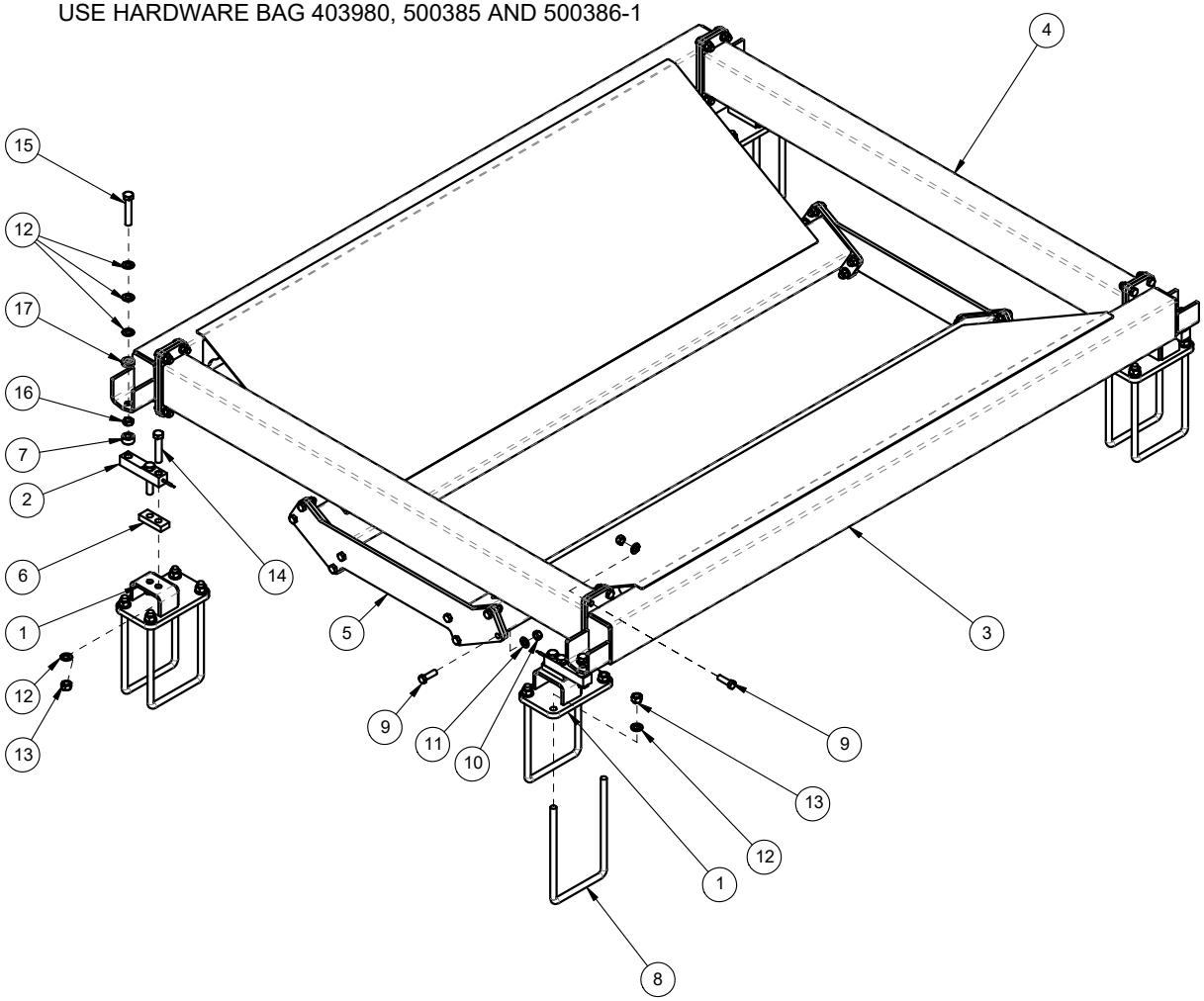

Tank Lid

Item	Qty.	Part No.	Description	Item	Qty.	Part No.	Description
1	1	500520-4	ASSY, AIR CART LID BASE ASSEMBLY - BLK				
2	1	500530-2	ASSY, AIR CART LID				
3	1	500545-2	ASSY, AIR CART LID ARM				
4	2	500550-1	ASSY, PIN - 3/4 IN LID				
5	2	250552	WASHER, FLAT 3/4IN GR8 PL				
6	2	250607	PIN, SPRING - 3/16 X 1 1/4 IN				
7	22	250566	WASHER, FLAT - 3/8 IN PL				
8	22	250453	NUT, HEX - 3/8 UNC PL				
9	1	LID SEAL	CELLTITE SPONGE - 1/2 X2 IN				
10	1	SEAL INNER	CELLTITE SPONGE - 1/2 X2 IN				
11	1	SEAL OUTER	CELLTITE SPONGE - 1/2 X2 IN				
12	1	258552	CYL, HYD 2 X 8 IN - FILL AUGER				

Tank Lid
Part Number: 500500-4

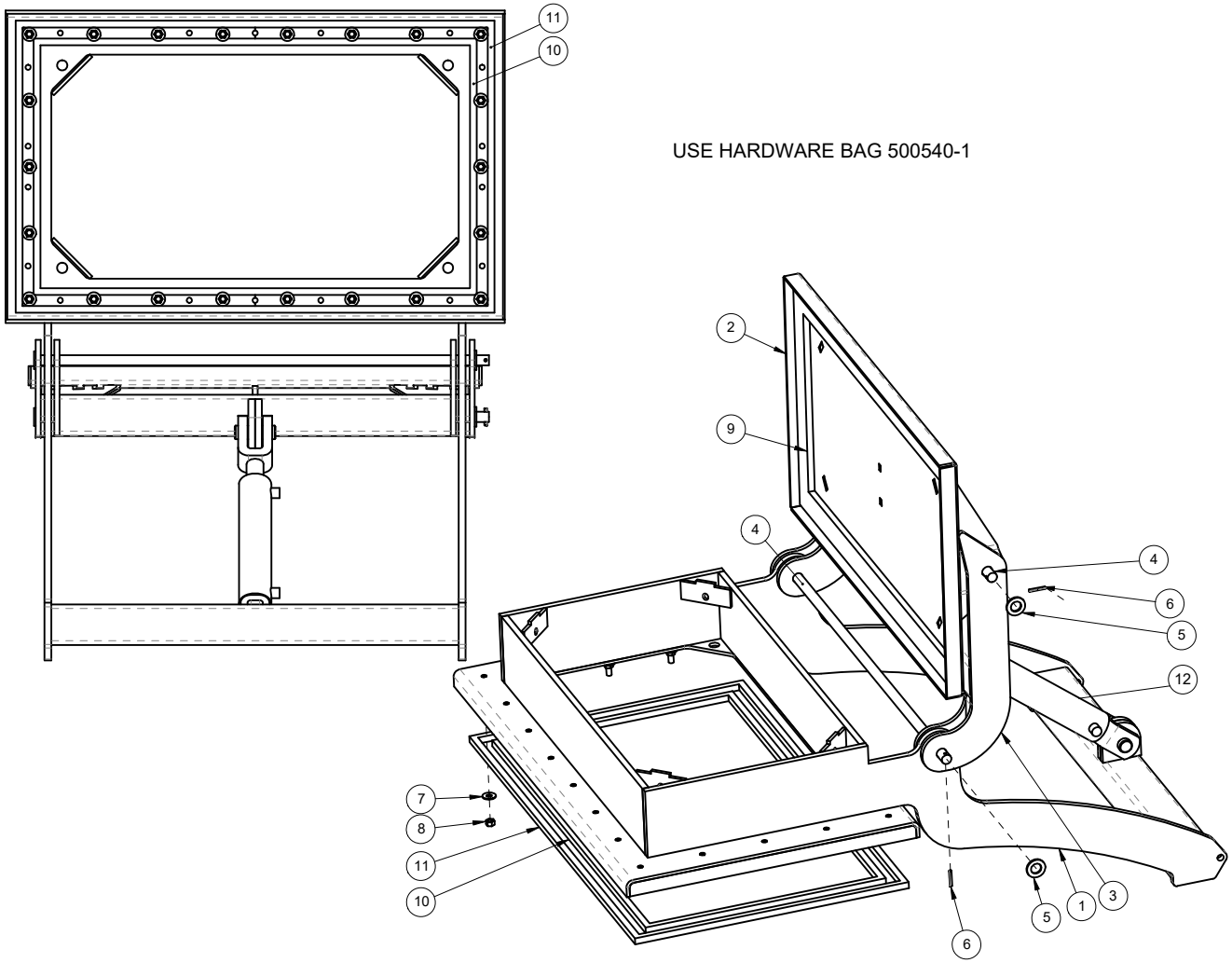

Nova 260 BU Y-Section Dual Shoot 10 Zone

Item	Qty.	Part No.	Description	Item	Qty.	Part No.	Description
1	1	500910-3	ASSY, Y-SECTION - DUAL SHOOT - NOVA - BLK				
2	1	500928-2	PLATE, FRMD 1/4 IN - Y SECTION HANGER - RH - BLK				
3	8	250001	BOLT, HEX 1/2 X 1 1/2 IN GR5 PL				
4	12	250555	WASHER, FLAT - 1/2 IN - GR8 - PL				
5	4	250450	NUT, HEX 1/2 UNC GR5 PL				
6	4	250100	BOLT, CARRIAGE - 3/8 X 1 1/2IN UND GR5 PL				
7	4	250557	WASHER, FLAT - 3/8 IN GR8 PL				
8	4	250453	NUT, HEX - 3/8 UNC PL				
9	10	500120	ASSY, PLUG - Y SECTION - NOVA				
10	1	504103	WELD, NOVA Y-SECTION - 260 BU LEFT SIDE HANGER - TBH				
11	4	250504	NUT, LOCK - 1/2 UNC - STOVER - PL				
12	1	500122	PLUG, AIR - 2IN PIPE - GRIPPER - DURO - 55A				
13	1	250110	BOLT, ELEVATOR - 3/8 X 2 IN UNC GR5 PL				
14	1	250531	NUT, WING - 3/8 UNC - STAINLESS				
15	1	500121	SHEET, 14 GA - WASHER - PLUG - Y SECTION				

Nova Y-Section Dual Shoot 10-Zone
Part Number: 500900-2

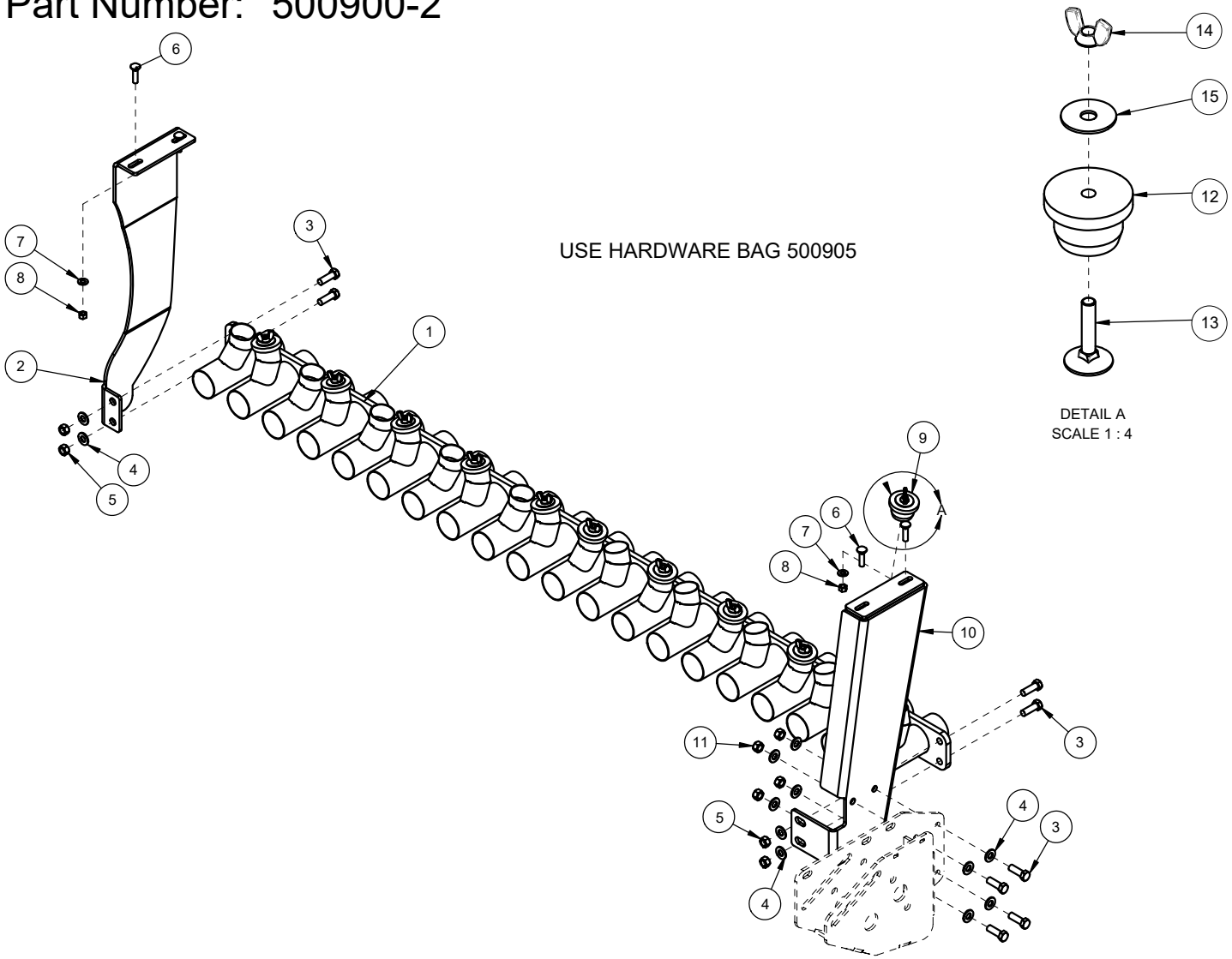

Nova 260 BU Y-Section Single Shoot 10 Zone

Item	Qty.	Part No.	Description	Item	Qty.	Part No.	Description
1	1	500915-2	ASSY, Y-SECTION - SINGLE SHOOT - NOVA - BLK				
2	1	500928-2	PLATE, FRMD 1/4 IN - Y SECTION HANGER - RH - BLK				
3	8	250001	BOLT, HEX 1/2 X 1 1/2 IN GR5 PL				
4	12	250555	WASHER, FLAT - 1/2 IN - GR8 - PL				
5	4	250450	NUT, HEX 1/2 UNC GR5 PL				
6	4	250100	BOLT, CARRIAGE - 3/8 X 1 1/2IN UND GR5 PL				
7	4	250557	WASHER, FLAT - 3/8 IN GR8 PL				
8	4	250453	NUT, HEX - 3/8 UNC PL				
9	1	504103	WELD, NOVA Y-SECTION - 260 BU LEFT SIDE HANGER - TBH				
10	4	250504	NUT, LOCK - 1/2 UNC - STOVER - PL				

Nova Y-Section Single Shoot 10-Zone
Part Number: 500901-2

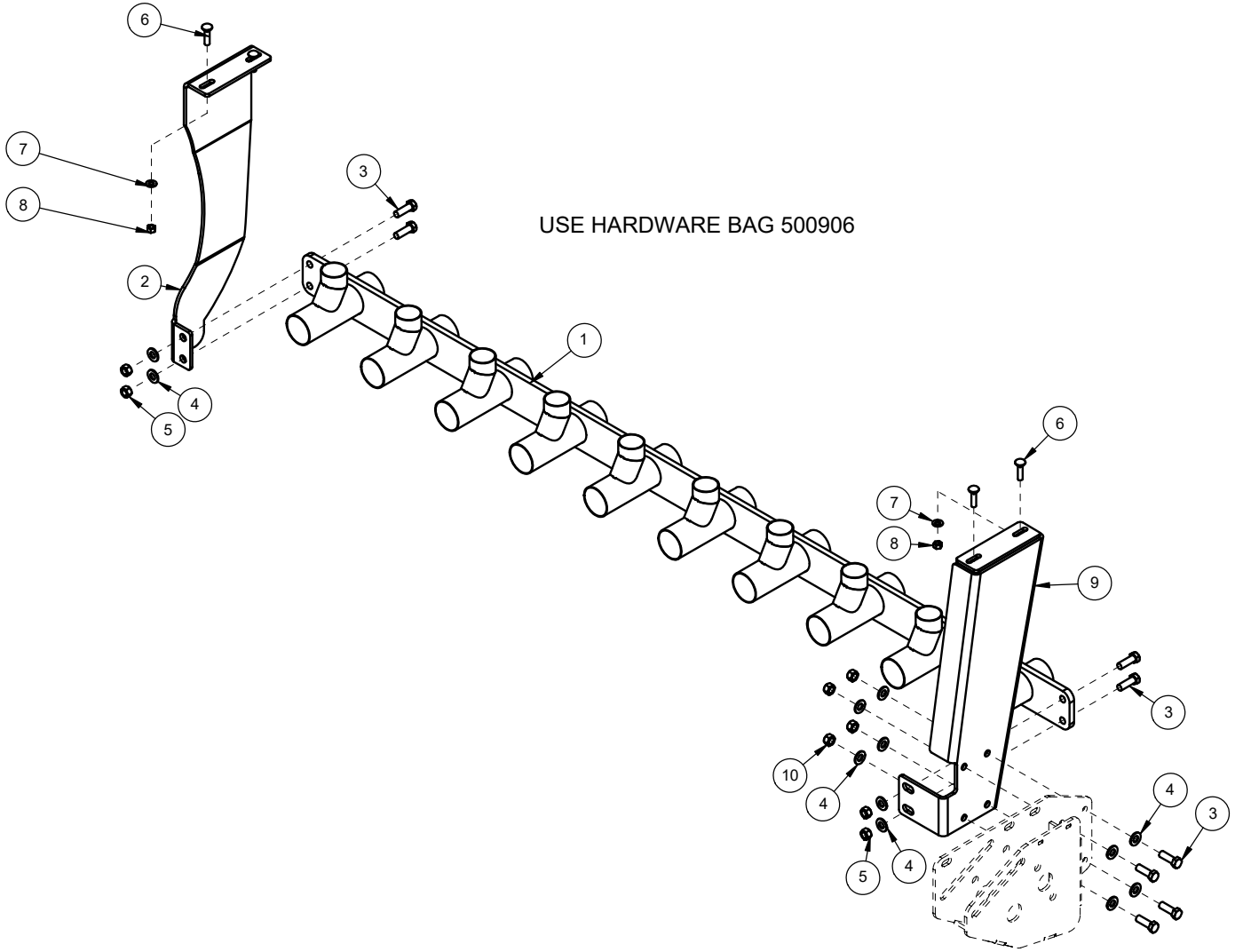

Nova 260 BU Y-Section Dual Shoot 8 Zone

Item	Qty.	Part No.	Description	Item	Qty.	Part No.	Description
1	1	500882-2	ASSY, Y-SECTION - DUAL SHOOT - 8 ZONE - NOVA - BLK				
2	1	500928-2	PLATE, FRMD 1/4 IN - Y SECTION HANGER - RH - BLK				
3	8	250001	BOLT, HEX 1/2 X 1 1/2 IN GR5 PL				
4	12	250555	WASHER, FLAT - 1/2 IN - GR8 - PL				
5	4	250450	NUT, HEX 1/2 UNC GR5 PL				
6	4	250100	BOLT, CARRIAGE - 3/8 X 1 1/2IN UND GR5 PL				
7	4	250557	WASHER, FLAT - 3/8 IN GR8 PL				
8	4	250453	NUT, HEX - 3/8 UNC PL				
9	8	500120	ASSY, PLUG - Y SECTION - NOVA				
10	1	504103	WELD, NOVA Y-SECTION - 260 BU LEFT SIDE HANGER - TBH				
11	4	250504	NUT, LOCK - 1/2 UNC - STOVER - PL				
12	1	500122	PLUG, AIR - 2IN PIPE - GRIPPER - DURO - 55A				
13	1	250110	BOLT, ELEVATOR - 3/8 X 2 IN UNC GR5 PL				
14	1	250531	NUT, WING - 3/8 UNC - STAINLESS				
15	1	500121	SHEET, 14 GA - WASHER - PLUG - Y SECTION				

Nova Y-Section Dual Shoot 8-Zone
Part Number: 500870-2

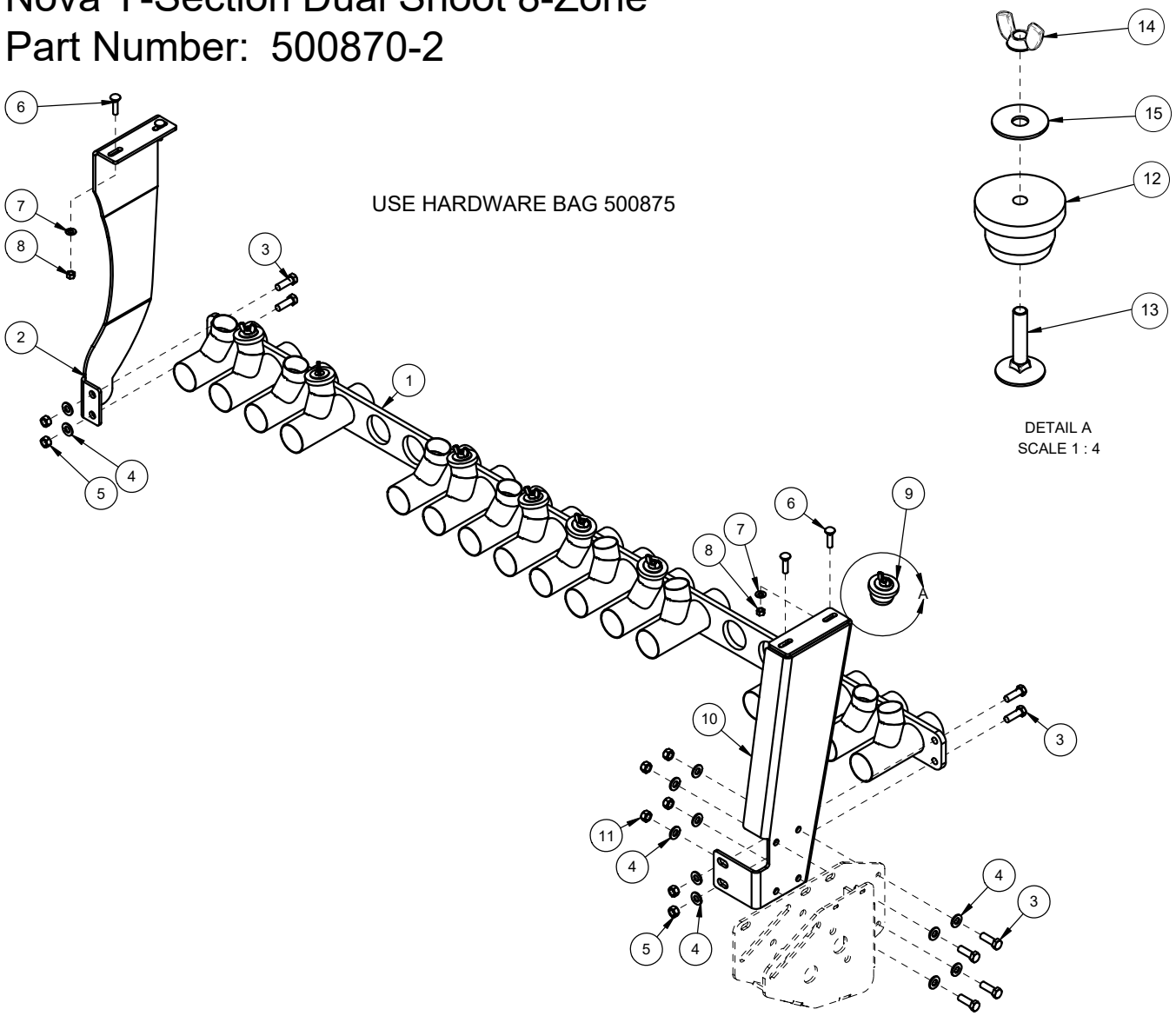

Nova 260 BU Y-Section Single Shoot 8 Zone

Item	Qty.	Part No.	Description	Item	Qty.	Part No.	Description
1	1	500880-1	ASSY, Y-SECTION - SINGLE SHOOT - 8 ZONE - NOVA - BLK				
2	1	504103	WELD, NOVA Y-SECTION - 260 BU LEFT SIDE HANGER - TBH				
3	1	500928-2	PLATE, FRMD 1/4 IN - Y SECTION HANGER - RH - BLK				
4	8	250001	BOLT, HEX 1/2 X 1 1/2 IN GR5 PL				
5	12	250555	WASHER, FLAT - 1/2 IN - GR8 - PL				
6	4	250450	NUT, HEX 1/2 UNC GR5 PL				
7	4	250100	BOLT, CARRIAGE - 3/8 X 1 1/2IN UND GR5 PL				
8	4	250557	WASHER, FLAT - 3/8 IN GR8 PL				
9	4	250453	NUT, HEX - 3/8 UNC PL				
10	4	250504	NUT, LOCK - 1/2 UNC - STOVER - PL				

Nova Y-Section Single Shoot 8-Zone
Part Number: 500871-2

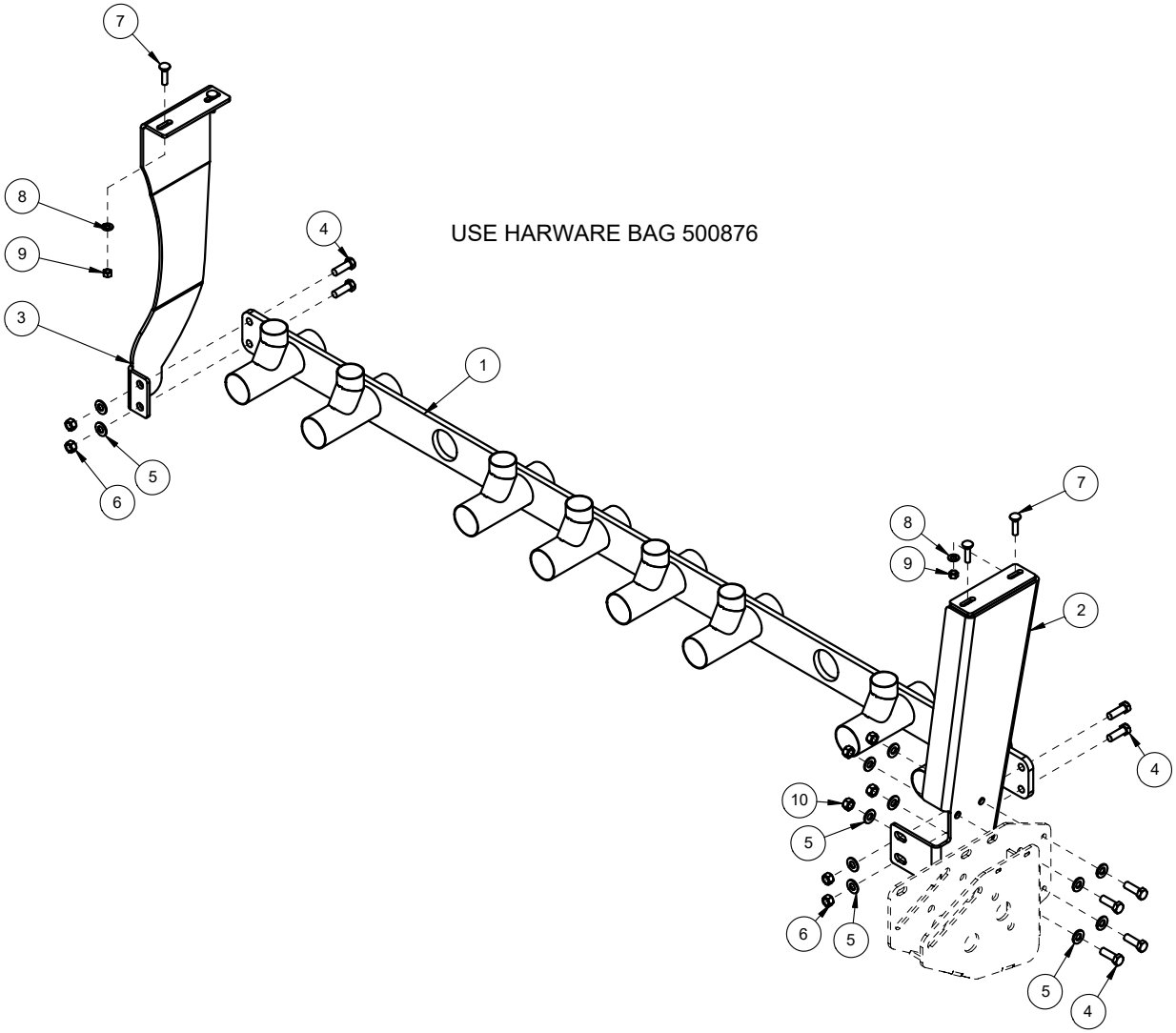

Nova 110 BU Tow Behind Y-Section Dual Shoot 10-Zone

Item	Qty.	Part No.	Description	Item	Qty.	Part No.	Description
1	1	500910-3	ASSY, Y-SECTION - DUAL SHOOT - NOVA - BLK				
2	4	250001	BOLT, HEX 1/2 X 1 1/2 IN GR5 PL				
3	4	250450	NUT, HEX 1/2 UNC GR5 PL				
4	12	250555	WASHER, FLAT - 1/2 IN - GR8 - PL				
5	4	250100	BOLT, CARRIAGE - 3/8 X 1 1/2IN UND GR5 PL				
6	4	250557	WASHER, FLAT - 3/8 IN GR8 PL				
7	4	250453	NUT, HEX - 3/8 UNC PL				
8	10	500120	ASSY, PLUG - Y SECTION - NOVA				
9	1	504111	WELD, NOVA Y-SECTION - 110 BU LEFT SIDE HANGER - TBH				
10	1	503563-1	PLATE, FRMD 1/4 IN - Y SEC HANGER - RH - 630 TOW BEHIND				
11	4	250048	BOLT, HEX 1/2 X 2 IN GR5 PL				
12	1	504108	NOVA SERIES II				
13	4	250504	NUT, LOCK - 1/2 UNC - STOVER - PL				
14	1	500122	PLUG, AIR - 2IN PIPE - GRIPPER - DURO - 55A				
15	1	250110	BOLT, ELEVATOR - 3/8 X 2 IN UNC GR5 PL				
16	1	250531	NUT, WING - 3/8 UNC - STAINLESS				
17	1	500121	SHEET, 14 GA - WASHER - PLUG - Y SECTION				

Nova 110 BU Tow Behind Y-Section Dual Shoot 10-Zone
Part Number: 503560-2

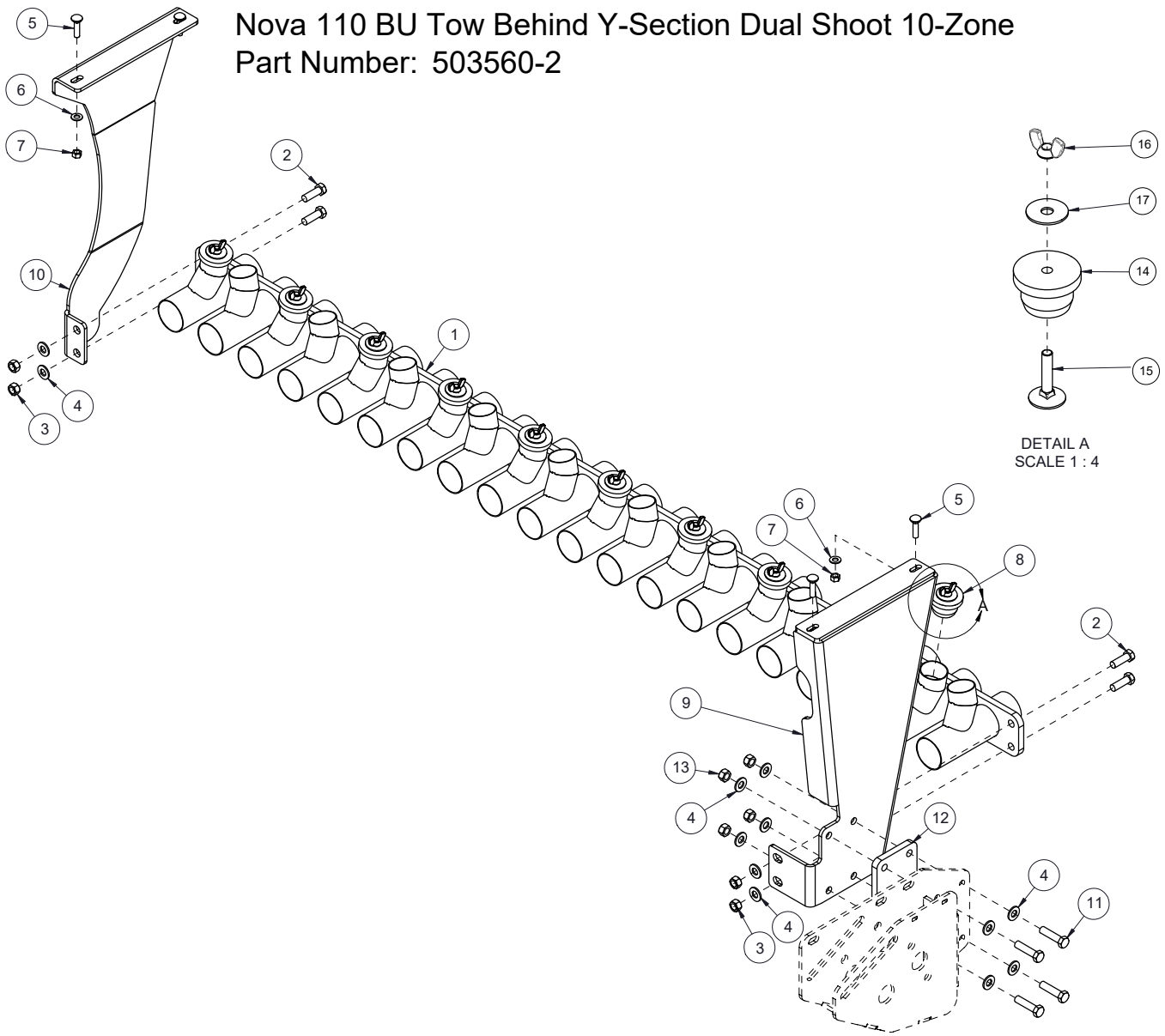

Nova 110 BU Tow Behind Y-Section Single Shoot 10-Zone

Item	Qty.	Part No.	Description	Item	Qty.	Part No.	Description
1	1	500915-2	ASSY, Y-SECTION - SINGLE SHOOT - NOVA - BLK				
2	4	250001	BOLT, HEX 1/2 X 1 1/2 IN GR5 PL				
3	4	250450	NUT, HEX 1/2 UNC GR5 PL				
4	12	250555	WASHER, FLAT - 1/2 IN - GR8 - PL				
5	4	250100	BOLT, CARRIAGE - 3/8 X 1 1/2IN UND GR5 PL				
6	4	250557	WASHER, FLAT - 3/8 IN GR8 PL				
7	4	250453	NUT, HEX - 3/8 UNC PL				
8	1	504111	WELD, NOVA Y-SECTION - 110 BU LEFT SIDE HANGER - TBH				
9	1	503563-1	PLATE, FRMD 1/4 IN - Y SEC HANGER - RH - 630 TOW BEHIND				
10	1	504108	NOVA SERIES II				
11	4	250048	BOLT, HEX 1/2 X 2 IN GR5 PL				
12	4	250504	NUT, LOCK - 1/2 UNC - STOVER - PL				

Nova 110 BU Tow Behind Y-Section Single Shoot 10-Zone
Part Number: 503561-2

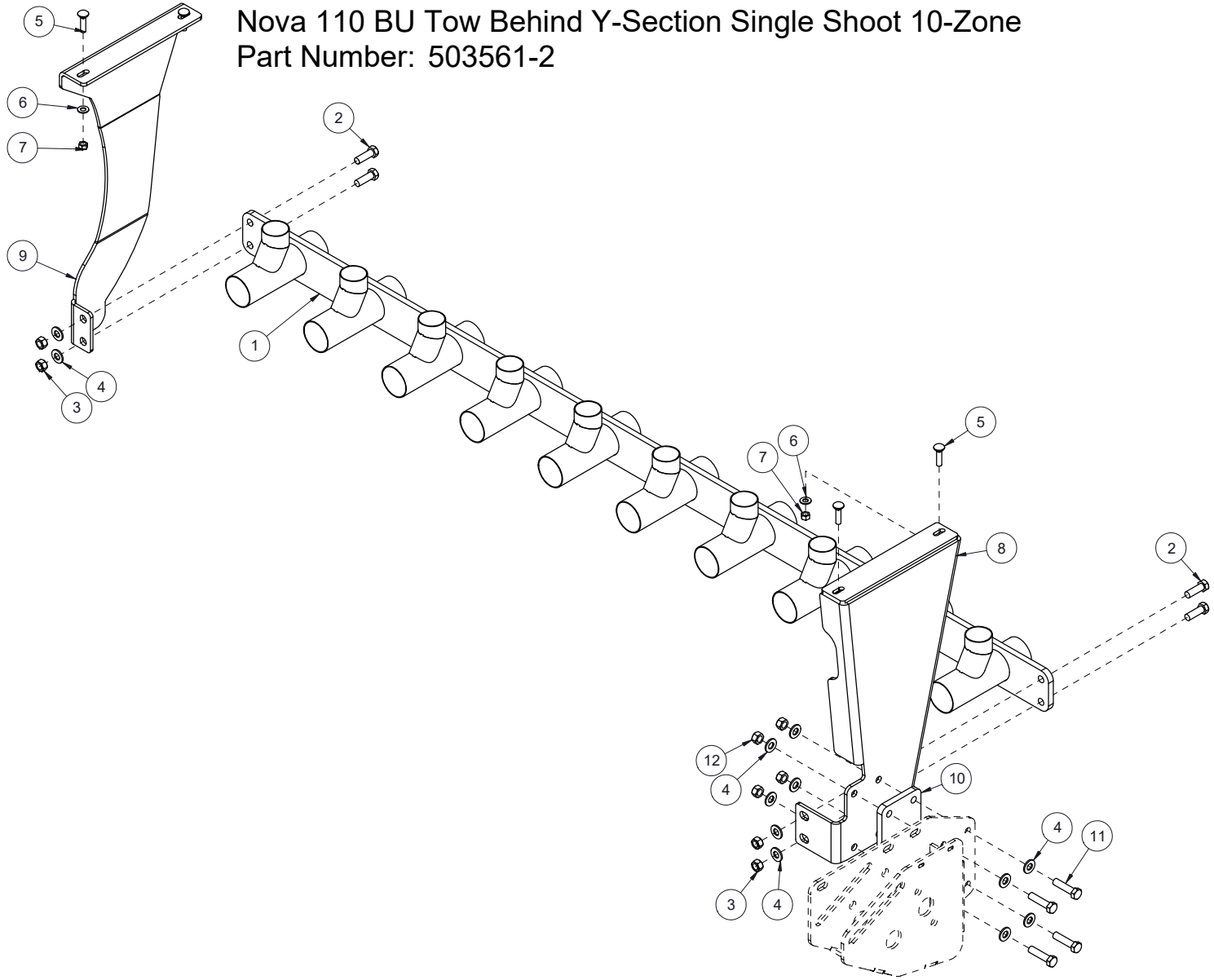

Nova 110 BU Tow Behind Y-Section Dual Shoot 8-Zone

Item	Qty.	Part No.	Description	Item	Qty.	Part No.	Description
1	1	500882-2	ASSY, Y-SECTION - DUAL SHOOT - 8 ZONE - NOVA - BLK				
2	4	250001	BOLT, HEX 1/2 X 1 1/2 IN GR5 PL				
3	4	250450	NUT, HEX 1/2 UNC GR5 PL				
4	12	250555	WASHER, FLAT - 1/2 IN - GR8 - PL				
5	4	250100	BOLT, CARRIAGE - 3/8 X 1 1/2IN UND GR5 PL				
6	4	250557	WASHER, FLAT - 3/8 IN GR8 PL				
7	4	250453	NUT, HEX - 3/8 UNC PL				
8	8	500120	ASSY, PLUG - Y SECTION - NOVA				
9	1	504111	WELD, NOVA Y-SECTION - 110 BU LEFT SIDE HANGER - TBH				
10	1	503563-1	PLATE, FRMD 1/4 IN - Y SEC HANGER - RH - 630 TOW BEHIND				
11	1	504108	NOVA SERIES II				
12	4	250048	BOLT, HEX 1/2 X 2 IN GR5 PL				
13	4	250504	NUT, LOCK - 1/2 UNC - STOVER - PL				
14	1	500122	PLUG, AIR - 2IN PIPE - GRIPPER - DURO - 55A				
15	1	250110	BOLT, ELEVATOR - 3/8 X 2 IN UNC GR5 PL				
16	1	250531	NUT, WING - 3/8 UNC - STAINLESS				
17	1	500121	SHEET, 14 GA - WASHER - PLUG - Y SECTION				

SEED MASTER™

Nova 110 BU Tow Behind Y-Section Dual Shoot 8-Zone
Part Number: 503567-2

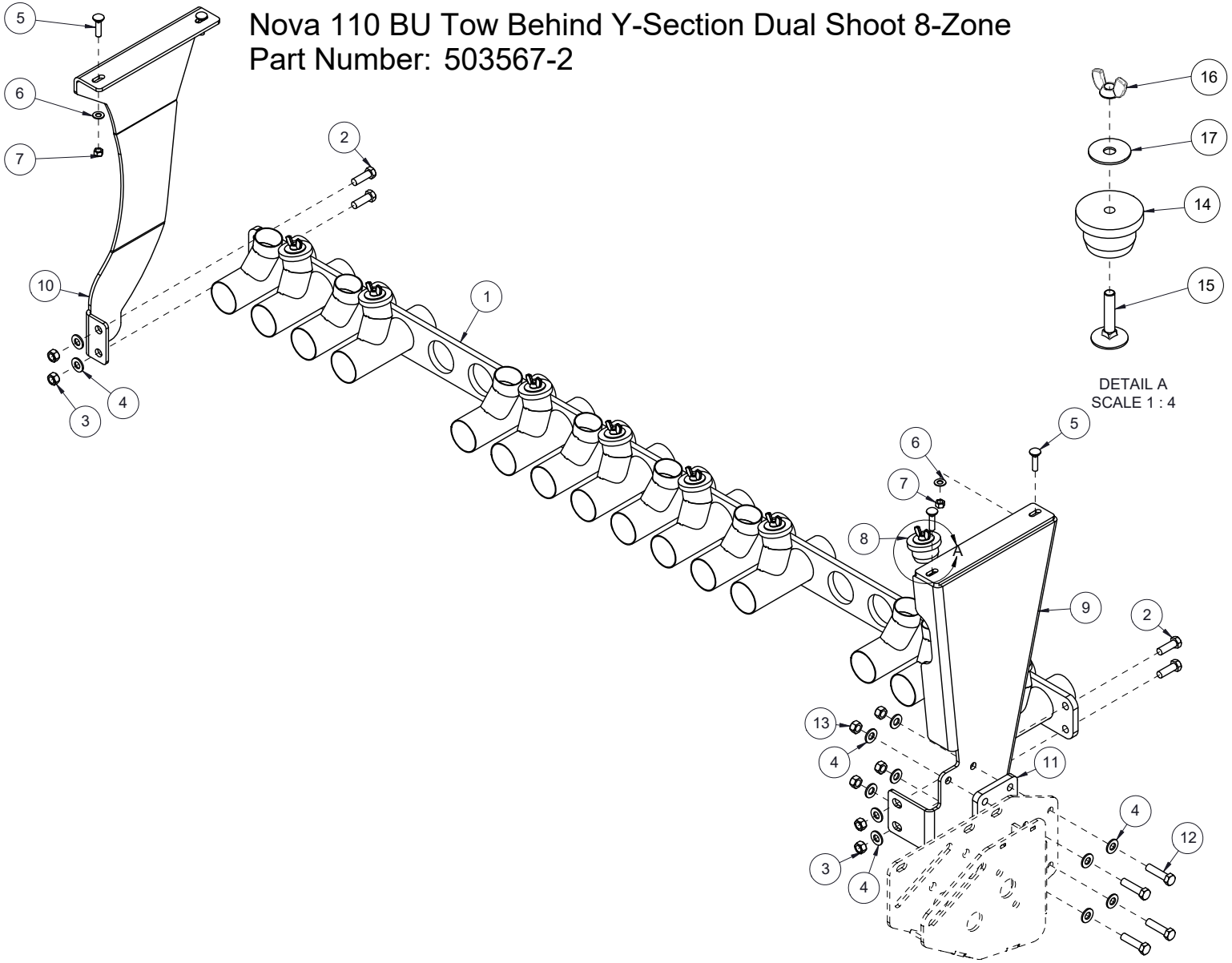

Nova 110 BU Tow Behind Y-Section Single Shoot 8-Zone

Item	Qty.	Part No.	Description	Item	Qty.	Part No.	Description
1	1	500880-1	ASSY, Y-SECTION - SINGLE SHOOT - 8 ZONE - NOVA - BLK				
2	4	250001	BOLT, HEX 1/2 X 1 1/2 IN GR5 PL				
3	4	250450	NUT, HEX 1/2 UNC GR5 PL				
4	12	250555	WASHER, FLAT - 1/2 IN - GR8 - PL				
5	4	250100	BOLT, CARRIAGE - 3/8 X 1 1/2IN UND GR5 PL				
6	4	250557	WASHER, FLAT - 3/8 IN GR8 PL				
7	4	250453	NUT, HEX - 3/8 UNC PL				
8	1	504111	WELD, NOVA Y-SECTION - 110 BU LEFT SIDE HANGER - TBH				
9	1	503563-1	PLATE, FRMD 1/4 IN - Y SEC HANGER - RH - 630 TOW BEHIND				
10	1	504108	NOVA SERIES II				
11	4	250048	BOLT, HEX 1/2 X 2 IN GR5 PL				
12	4	250504	NUT, LOCK - 1/2 UNC - STOVER - PL				

Nova 110 BU Tow Behind Y-Section Single Shoot 8-Zone
Part Number: 503568-2

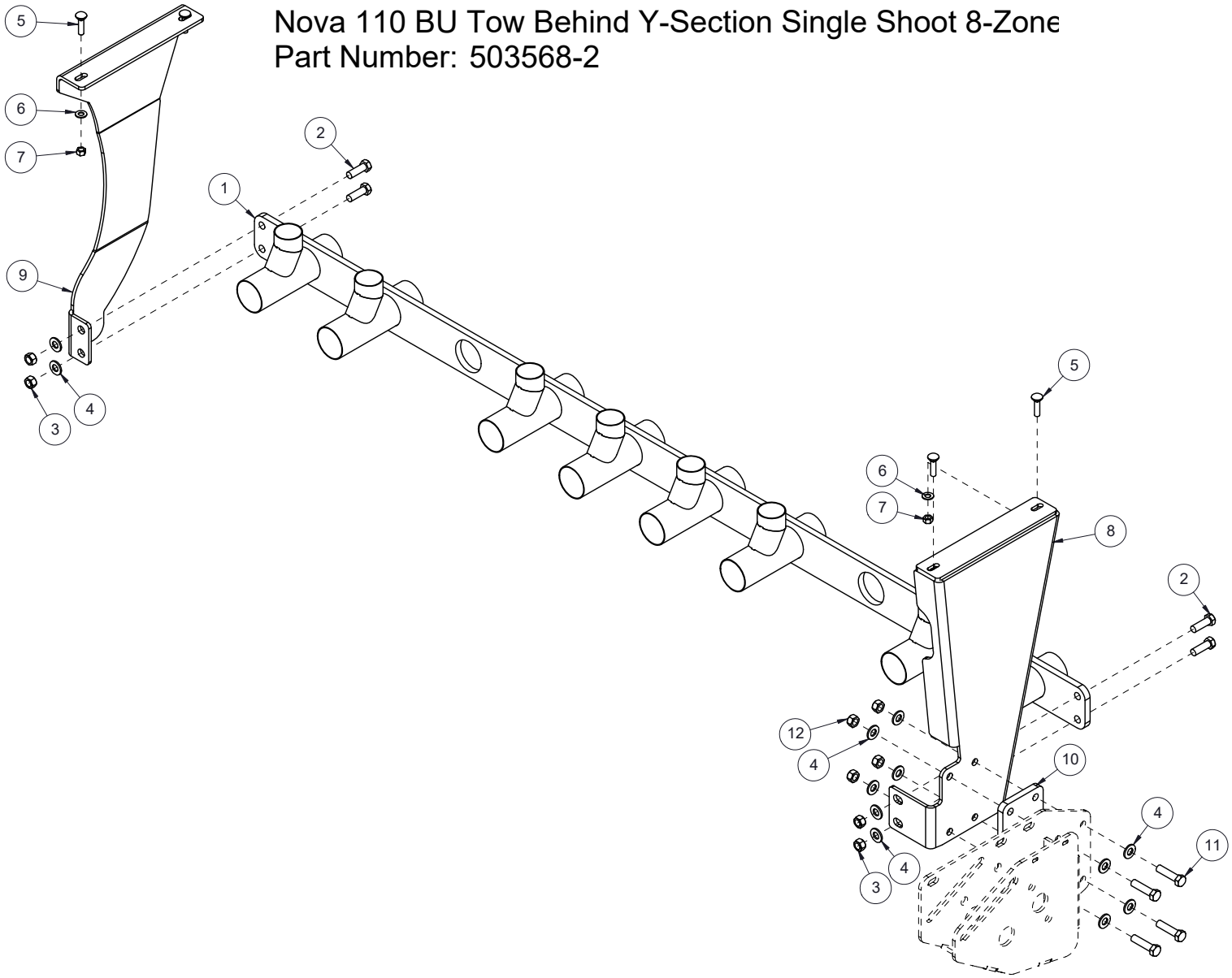

Nova 260 BU Tow Between Y-Section Dual Shoot 10-Zone

Item	Qty.	Part No.	Description	Item	Qty.	Part No.	Description
1	1	500910-3	ASSY, Y-SECTION - DUAL SHOOT - NOVA - BLK				
2	1	503356-1	PLATE, FRMD 1/4 IN - Y SECTION HANGER - RH T/B NOVA - BLK				
3	1	504110	WELD, NOVA Y-SECTION - 260 BU LEFT SIDE HANGER - TBT				
4	8	250001	BOLT, HEX 1/2 X 1 1/2 IN GR5 PL				
5	4	250450	NUT, HEX 1/2 UNC GR5 PL				
6	12	250555	WASHER, FLAT - 1/2 IN - GR8 - PL				
7	4	250100	BOLT, CARRIAGE - 3/8 X 1 1/2IN UND GR5 PL				
8	4	250557	WASHER, FLAT - 3/8 IN GR8 PL				
9	4	250453	NUT, HEX - 3/8 UNC PL				
10	10	500120	ASSY, PLUG - Y SECTION - NOVA				
11	4	250504	NUT, LOCK - 1/2 UNC - STOVER - PL				
12	1	500122	PLUG, AIR - 2IN PIPE - GRIPPER - DURO - 55A				
13	1	250110	BOLT, ELEVATOR - 3/8 X 2 IN UNC GR5 PL				
14	1	250531	NUT, WING - 3/8 UNC - STAINLESS				
15	1	500121	SHEET, 14 GA - WASHER - PLUG - Y SECTION				

SEED MASTER™

Nova 260 BU Tow Between Y-Section Dual Shoot 10-Zone
Part Number: 503425-2

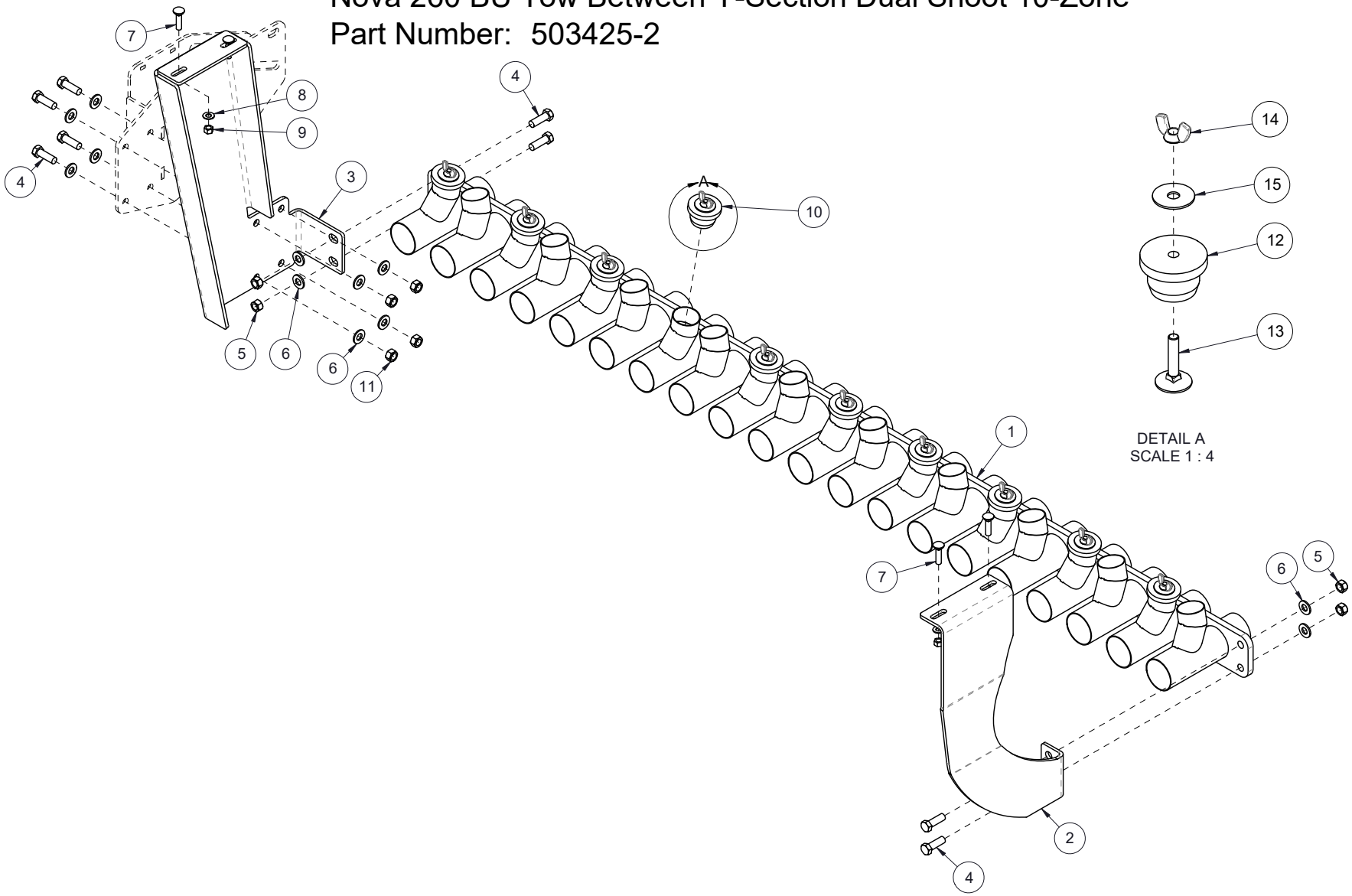

Nova 260 BU Tow Between Y-Section Single Shoot 10-Zone

Item	Qty.	Part No.	Description	Item	Qty.	Part No.	Description
1	1	500915-2	ASSY, Y-SECTION - SINGLE SHOOT - NOVA - BLK				
2	1	503356-1	PLATE, FRMD 1/4 IN - Y SECTION HANGER - RH T/B NOVA - BLK				
3	1	504110	WELD, NOVA Y-SECTION - 260 BU LEFT SIDE HANGER - TBT				
4	8	250001	BOLT, HEX 1/2 X 1 1/2 IN GR5 PL				
5	4	250450	NUT, HEX 1/2 UNC GR5 PL				
6	12	250555	WASHER, FLAT - 1/2 IN - GR8 - PL				
7	4	250100	BOLT, CARRIAGE - 3/8 X 1 1/2IN UND GR5 PL				
8	4	250557	WASHER, FLAT - 3/8 IN GR8 PL				
9	4	250453	NUT, HEX - 3/8 UNC PL				
10	4	250504	NUT, LOCK - 1/2 UNC - STOVER - PL				

Nova 260 BU Tow Between Y-Section Single Shoot 10-Zone
Part Number: 503515-2

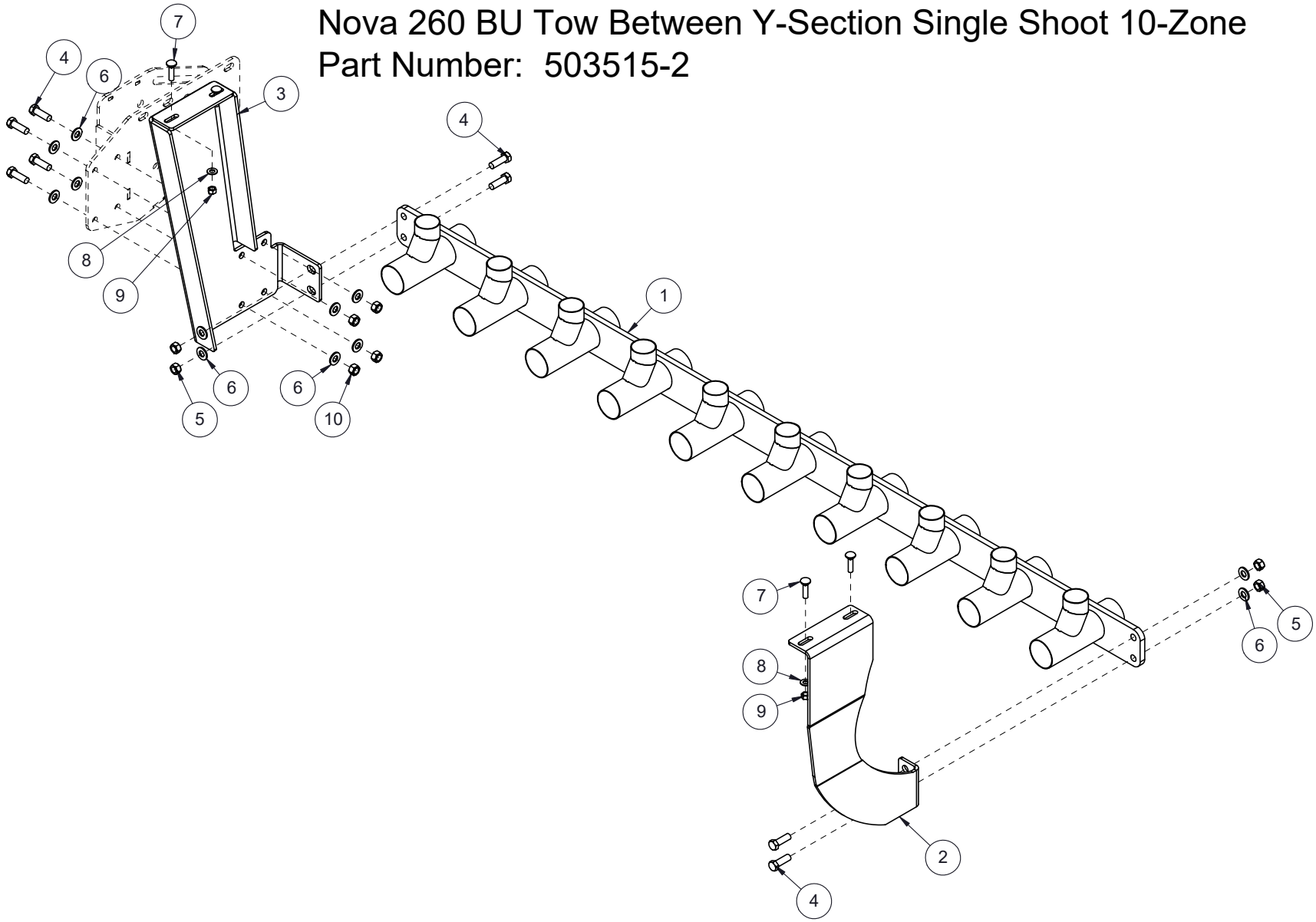

Nova 260 BU Tow Between Y-Section Dual Shoot 8-Zone

Item	Qty.	Part No.	Description	Item	Qty.	Part No.	Description
1	1	500882-2	ASSY, Y-SECTION - DUAL SHOOT - 8 ZONE - NOVA - BLK				
2	1	503356-1	PLATE, FRMD 1/4 IN - Y SECTION HANGER - RH T/B NOVA - BLK				
3	1	504110	WELD, NOVA Y-SECTION - 260 BU LEFT SIDE HANGER - TBT				
4	8	250001	BOLT, HEX 1/2 X 1 1/2 IN GR5 PL				
5	4	250450	NUT, HEX 1/2 UNC GR5 PL				
6	12	250555	WASHER, FLAT - 1/2 IN - GR8 - PL				
7	4	250100	BOLT, CARRIAGE - 3/8 X 1 1/2IN UND GR5 PL				
8	4	250557	WASHER, FLAT - 3/8 IN GR8 PL				
9	4	250453	NUT, HEX - 3/8 UNC PL				
10	4	250504	NUT, LOCK - 1/2 UNC - STOVER - PL				
11	8	500120	ASSY, PLUG - Y SECTION - NOVA				
12	1	500122	PLUG, AIR - 2IN PIPE - GRIPPER - DURO - 55A				
13	1	250110	BOLT, ELEVATOR - 3/8 X 2 IN UNC GR5 PL				
14	1	250531	NUT, WING - 3/8 UNC - STAINLESS				
15	1	500121	SHEET, 14 GA - WASHER - PLUG - Y SECTION				

Nova 260 BU Tow Between Y-Section Dual Shoot 8-Zone
Part Number: 503350-2

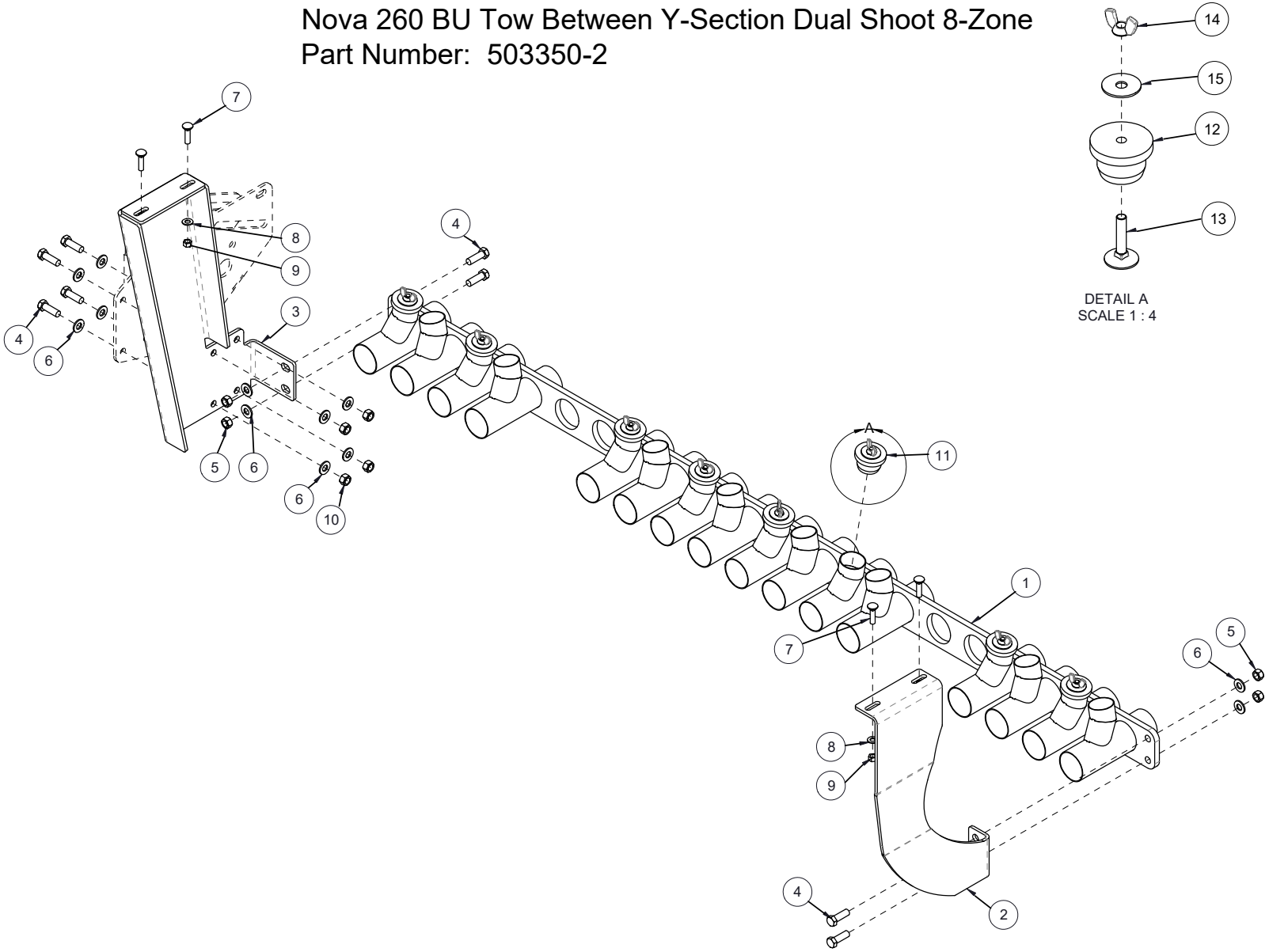

Nova 260 BU Tow Between Y-Section Single Shoot 8-Zone

Item	Qty.	Part No.	Description	Item	Qty.	Part No.	Description
1	1	500880-1	ASSY, Y-SECTION - SINGLE SHOOT - 8 ZONE - NOVA - BLK				
2	1	503356-1	PLATE, FRMD 1/4 IN - Y SECTION HANGER - RH T/B NOVA - BLK				
3	1	504110	WELD, NOVA Y-SECTION - 260 BU LEFT SIDE HANGER - TBT				
4	8	250001	BOLT, HEX 1/2 X 1 1/2 IN GR5 PL				
5	4	250450	NUT, HEX 1/2 UNC GR5 PL				
6	12	250555	WASHER, FLAT - 1/2 IN - GR8 - PL				
7	4	250100	BOLT, CARRIAGE - 3/8 X 1 1/2IN UND GR5 PL				
8	4	250557	WASHER, FLAT - 3/8 IN GR8 PL				
9	4	250453	NUT, HEX - 3/8 UNC PL				
10	4	250504	NUT, LOCK - 1/2 UNC - STOVER - PL				

Nova 260 BU Tow Between Y-Section Single Shoot 8-Zone
Part Number: 503525-2

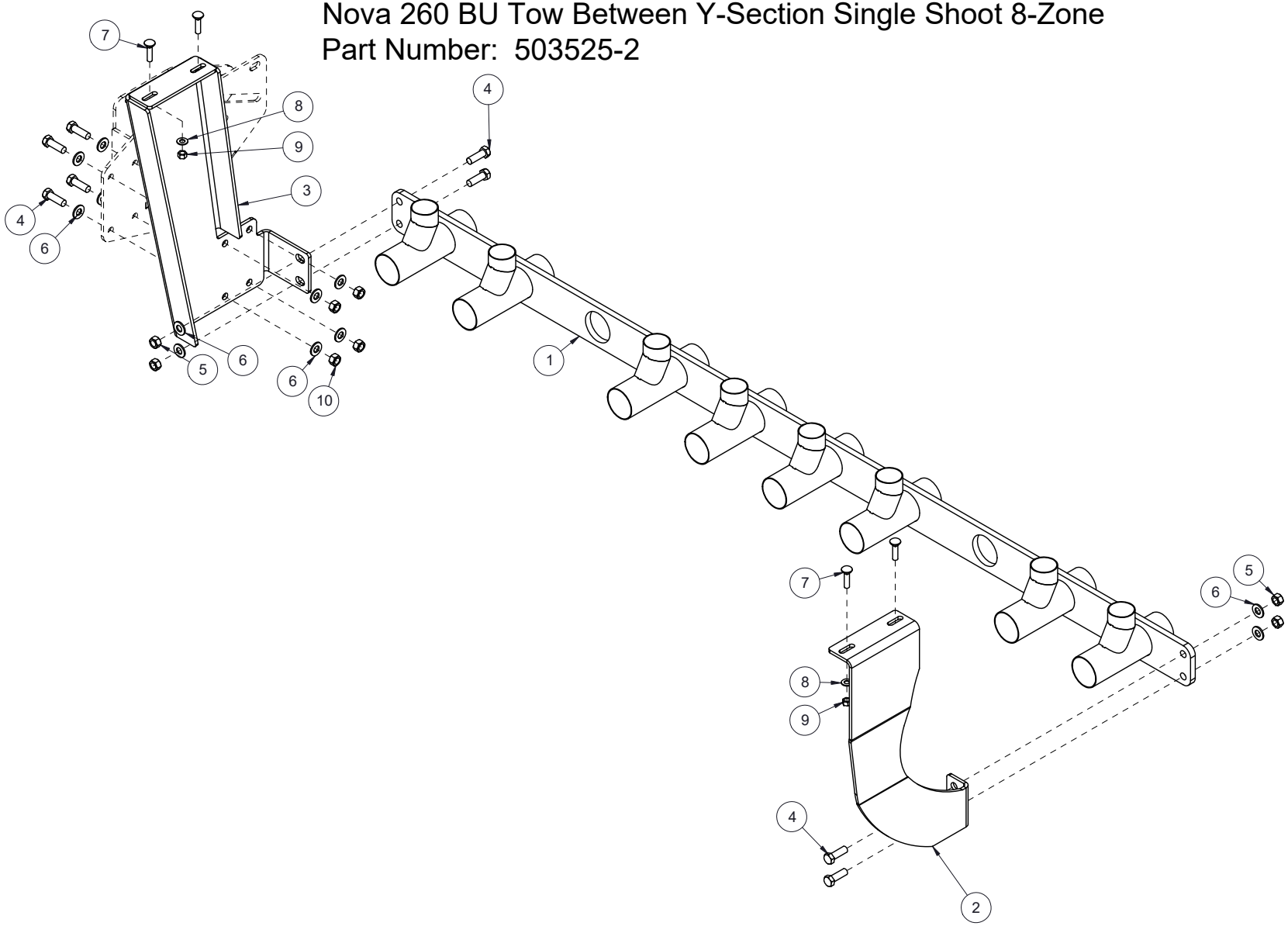

Nova 110 BU Tow Between Y-Section Dual Shoot 10-Zone

Item	Qty.	Part No.	Description	Item	Qty.	Part No.	Description
1	1	500910-3	ASSY, Y-SECTION - DUAL SHOOT - NOVA - BLK				
2	1	503382-2	PLATE, FRMD 1/4 IN - Y SECTION HANGER - LH - BLK				
3	4	250001	BOLT, HEX 1/2 X 1 1/2 IN GR5 PL				
4	4	250450	NUT, HEX 1/2 UNC GR5 PL				
5	12	250555	WASHER, FLAT - 1/2 IN - GR8 - PL				
6	4	250100	BOLT, CARRIAGE - 3/8 X 1 1/2IN UND GR5 PL				
7	4	250453	NUT, HEX - 3/8 UNC PL				
8	4	250557	WASHER, FLAT - 3/8 IN GR8 PL				
9	10	500120	ASSY, PLUG - Y SECTION - NOVA				
10	1	504107	WELD, NOVA Y-SECTION - 110 BU LEFT SIDE HANGER				
11	1	504108	NOVA SERIES II				
12	4	250048	BOLT, HEX 1/2 X 2 IN GR5 PL				
13	4	250504	NUT, LOCK - 1/2 UNC - STOVER - PL				
14	1	500122	PLUG, AIR - 2IN PIPE - GRIPPER - DURO - 55A				
15	1	250110	BOLT, ELEVATOR - 3/8 X 2 IN UNC GR5 PL				
16	1	250531	NUT, WING - 3/8 UNC - STAINLESS				
17	1	500121	SHEET, 14 GA - WASHER - PLUG - Y SECTION				

Nova 110 BU Tow Between Y-Section Dual Shoot 10-Zone
Part Number: 503370-2

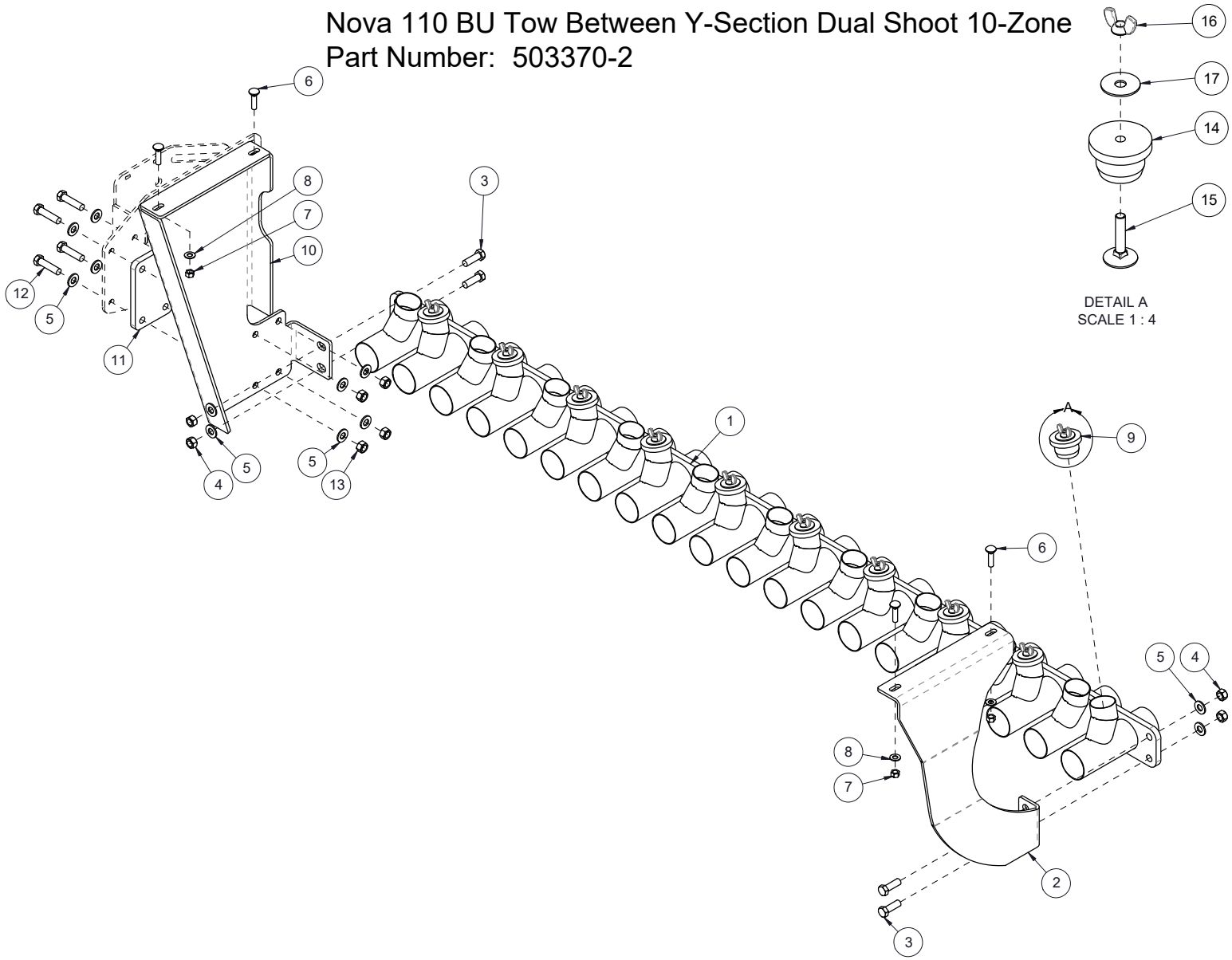

Nova 110 BU Tow Between Y-Section Single Shoot 10-Zone

Item	Qty.	Part No.	Description	Item	Qty.	Part No.	Description
1	1	500915-2	ASSY, Y-SECTION - SINGLE SHOOT - NOVA - BLK				
2	1	504107	WELD, NOVA Y-SECTION - 110 BU LEFT SIDE HANGER				
3	1	503382-2	PLATE, FRMD 1/4 IN - Y SECTION HANGER - LH - BLK				
4	4	250001	BOLT, HEX 1/2 X 1 1/2 IN GR5 PL				
5	4	250450	NUT, HEX 1/2 UNC GR5 PL				
6	12	250555	WASHER, FLAT - 1/2 IN - GR8 - PL				
7	4	250100	BOLT, CARRIAGE - 3/8 X 1 1/2IN UND GR5 PL				
8	4	250453	NUT, HEX - 3/8 UNC PL				
9	4	250557	WASHER, FLAT - 3/8 IN GR8 PL				
10	1	504108	NOVA SERIES II				
11	4	250048	BOLT, HEX 1/2 X 2 IN GR5 PL				
12	4	250504	NUT, LOCK - 1/2 UNC - STOVER - PL				

Nova 110 BU Tow Between Y-Section Single Shoot 10-Zone
Part Number: 503520-2

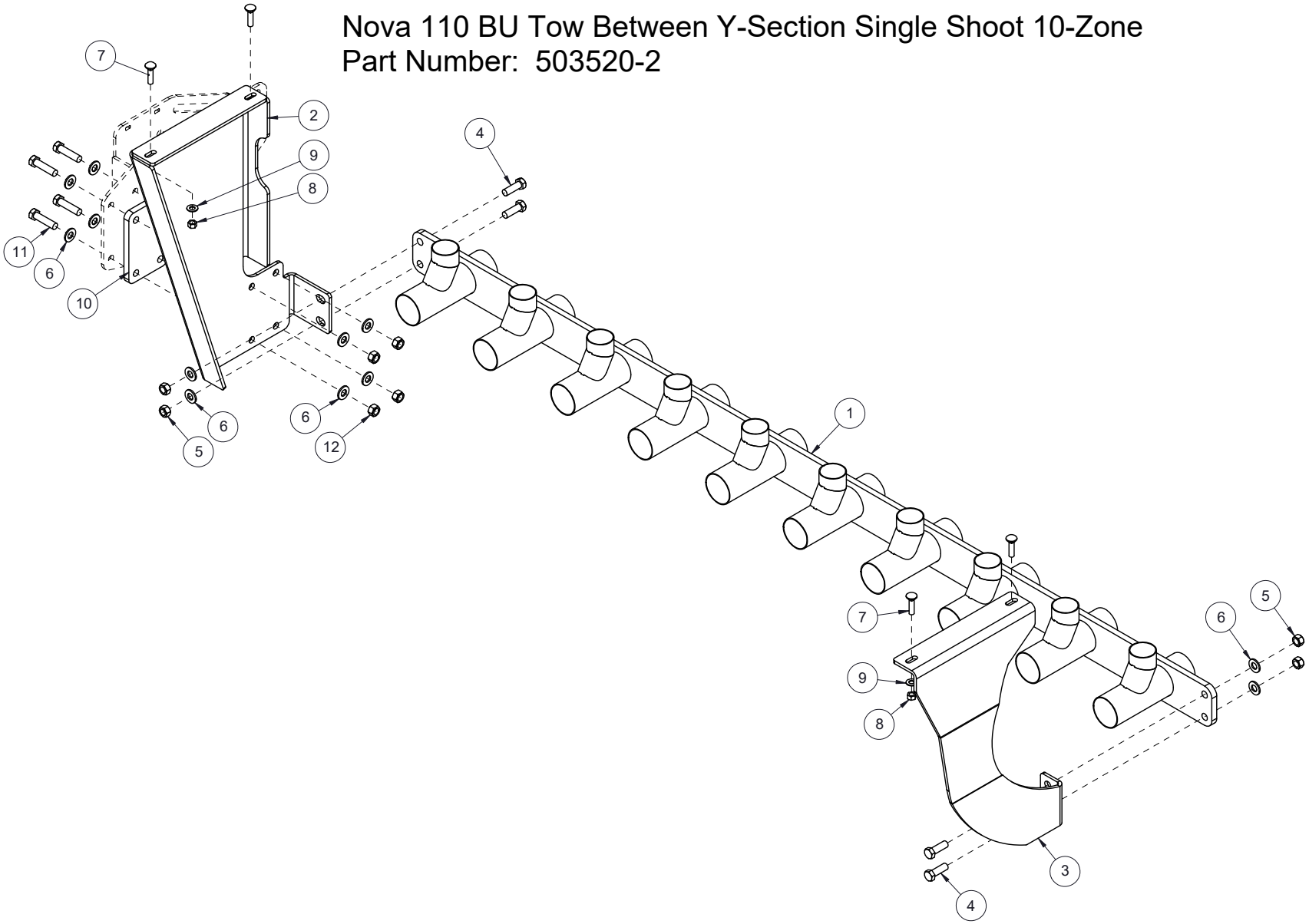

Nova 110 BU Tow Between Y-Section Dual Shoot 8-Zone

Item	Qty.	Part No.	Description	Item	Qty.	Part No.	Description
1	1	500882-2	ASSY, Y-SECTION - DUAL SHOOT - 8 ZONE - NOVA - BLK				
2	1	504107	WELD, NOVA Y-SECTION - 110 BU LEFT SIDE HANGER				
3	1	503382-2	PLATE, FRMD 1/4 IN - Y SECTION HANGER - LH - BLK				
4	4	250001	BOLT, HEX 1/2 X 1 1/2 IN GR5 PL				
5	4	250450	NUT, HEX 1/2 UNC GR5 PL				
6	12	250555	WASHER, FLAT - 1/2 IN - GR8 - PL				
7	4	250100	BOLT, CARRIAGE - 3/8 X 1 1/2IN UND GR5 PL				
8	4	250453	NUT, HEX - 3/8 UNC PL				
9	4	250557	WASHER, FLAT - 3/8 IN GR8 PL				
10	8	500120	ASSY, PLUG - Y SECTION - NOVA				
11	1	504108	NOVA SERIES II				
12	4	250048	BOLT, HEX 1/2 X 2 IN GR5 PL				
13	4	250504	NUT, LOCK - 1/2 UNC - STOVER - PL				
14	1	500122	PLUG, AIR - 2IN PIPE - GRIPPER - DURO - 55A				
15	1	250110	BOLT, ELEVATOR - 3/8 X 2 IN UNC GR5 PL				
16	1	250531	NUT, WING - 3/8 UNC - STAINLESS				
17	1	500121	SHEET, 14 GA - WASHER - PLUG - Y SECTION				

SEED MASTER™

Nova 110 BU Tow Between Y-Section Dual Shoot 8-Zone
Part Number: 503430-2

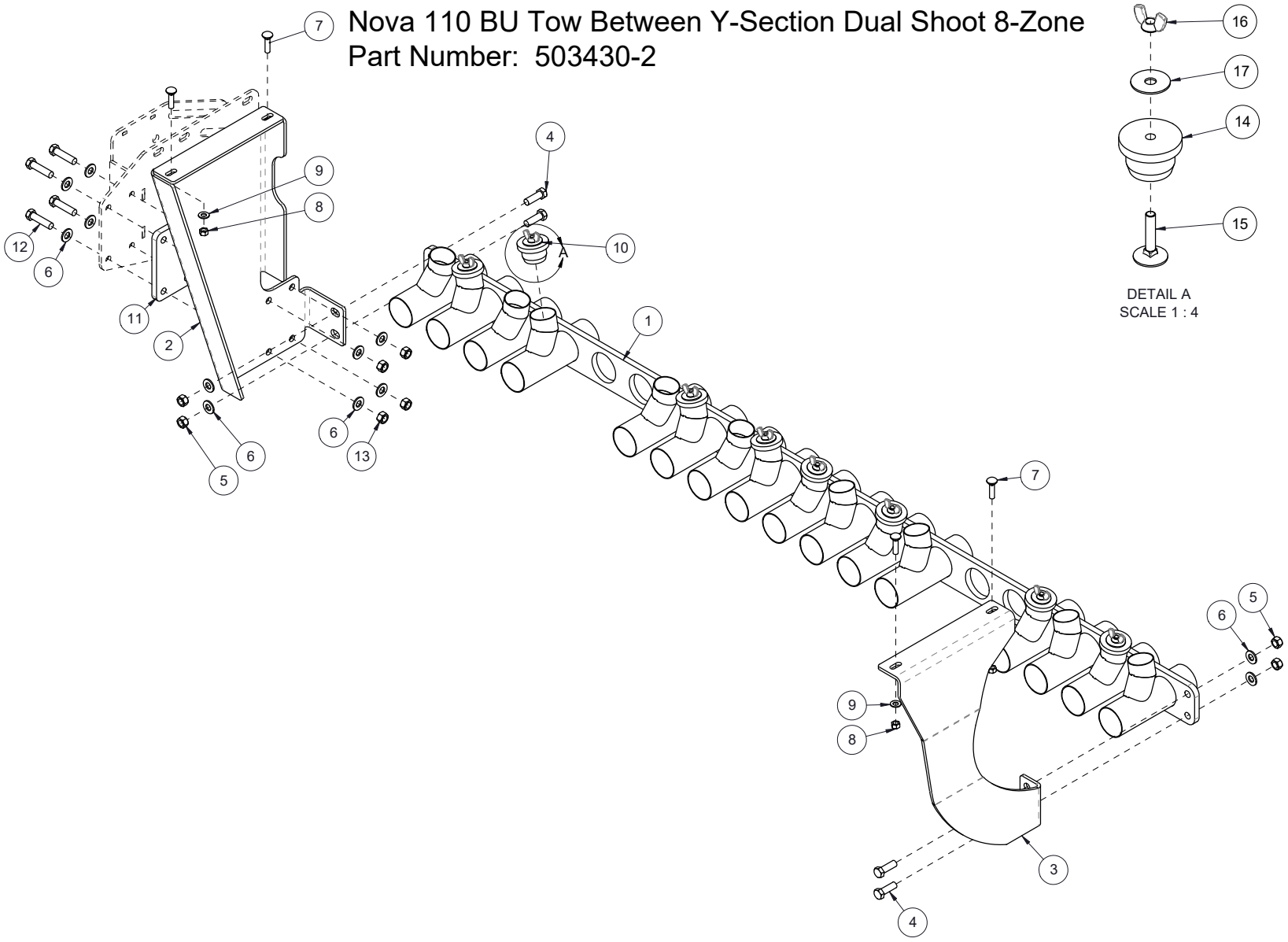

Nova 110 BU Tow Between Y-Section Single Shoot 8-Zone

Item	Qty.	Part No.	Description	Item	Qty.	Part No.	Description
1	1	500880-1	ASSY, Y-SECTION - SINGLE SHOOT - 8 ZONE - NOVA - BLK				
2	1	504107	WELD, NOVA Y-SECTION - 110 BU LEFT SIDE HANGER				
3	1	503382-2	PLATE, FRMD 1/4 IN - Y SECTION HANGER - LH - BLK				
4	4	250001	BOLT, HEX 1/2 X 1 1/2 IN GR5 PL				
5	4	250450	NUT, HEX 1/2 UNC GR5 PL				
6	12	250555	WASHER, FLAT - 1/2 IN - GR8 - PL				
7	4	250100	BOLT, CARRIAGE - 3/8 X 1 1/2IN UND GR5 PL				
8	4	250453	NUT, HEX - 3/8 UNC PL				
9	4	250557	WASHER, FLAT - 3/8 IN GR8 PL				
10	1	504108	NOVA SERIES II				
11	4	250048	BOLT, HEX 1/2 X 2 IN GR5 PL				
12	4	250504	NUT, LOCK - 1/2 UNC - STOVER - PL				

Nova 110 BU Tow Between Y-Section Single Shoot 8-Zone
Part Number: 503530-2

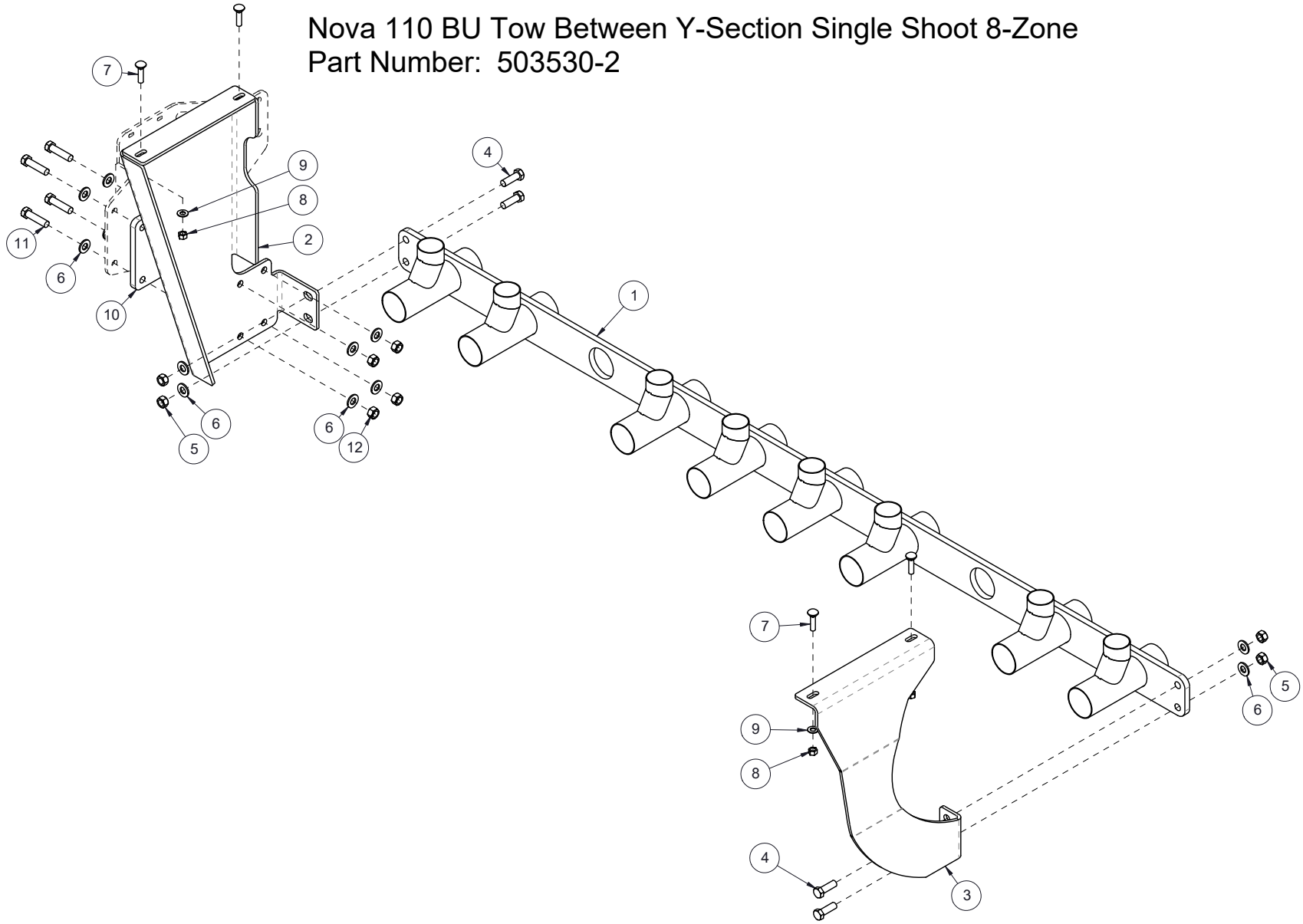

Fans/Air Splitter

Item	Qty.	Part No.	Description	Item	Qty.	Part No.	Description
1	1	501460	ASSY, AIR SPLITTER - S3 - DUAL - NOVA				
1	1	501480	ASSY, AIR SPLITTER - S3 - SINGLE - NOVA				
2	20	500830	ASSY, AIR GATE - 2 1/2 IN HOSE - AIR SPLITTER - NOVA - BLK				
3	2	258404	MOTOR, HYD - 6 IN FAN - SAUER-DANFOSS - 11CC - 3/4 OUTPUT				
4	4	250093	BOLT, HEX 3/8 X 1 3/4 IN GR5 PL				
5	58	250101	BOLT, CARRIAGE - 3/8 X 1 1/4 IN UNC GR5 PL				
6	40	250635	BOLT RETAINER - 3/8 IN				
7	63	250400	NUT, FLANGE - 3/8 UNC PL				
8	4	250619	PIN, COTTER 1/8 X 1 1/4				
9	6	250019	BOLT, HEX 3/8 X 1 1/4 IN GR5 PL				
10	4	250014	BOLT, HEX 3/4 X 2 UNC GR5 PL				
11	4	250552	WASHER, FLAT 3/4IN GR8 PL				
12	4	250451	NUT, HEX 3/4 UNC GR5 PL				
13	8	250557	WASHER, FLAT - 3/8 IN GR8 PL				
14	4	250453	NUT, HEX - 3/8 UNC PL				
15	1	250103	BOLT, CARRIAGE - 3/8 X 3/4 IN UNC GR5 PL				
16	2	255910	GAUGE, PRESSURE - AIR - P734 2.5 0-36 OUNCES 1/4LM BRASS				
17	2	250555	WASHER, FLAT - 1/2 IN - GR8 - PL				
18	2	260090	HOSE BARB, 1/4 FPT X 1/4 HB				
19	2	255931	COUPLER, JAW - QUICKFLEX - S3 FAN - 1-1/8 SHAFT				
20	2	255930	COUPLER, JAW - QUICKFLEX - S3 FAN - 3/4 SHAFT				
21	2	255933	COUPLER, COVER - QUICKFLEX - S3 FAN				
22	1	501490	PLATE, FRMD 10GA - GAUGE MNT - AIR SPLITTER - DUAL S3 - NOVA				
23	2	255920	FAN - S3 - RT-176 C/W MOTOR MNT				
24	2	255932	COUPLER, INSERT - QUICKFLEX - WHITE - S3 FAN				
25	1	501495	ASSY, RPM SENSOR MNT - S3 FAN				
26	2	501494	SHEET, FRMD 10GA - S3 RPM PICKUP				
-	0	500825-1	BDL, AIR SPLITTER - DUAL S3 - NOVA				
-	0	501065-1	BDL, AIR SPLITTER - SINGLE S3 - NOVA				
-	0	501070-1	BDL, AIR SPLITTER - SINGLE S3 - 8 ZONE - NOVA				
-	0	501071-1	BDL, AIR SPLITTER - DUAL S3 - 8 ZONE - NOVA				

Fans/Air Splitter

Part Number: 500825-1 - Dual Shoot 10 Zone
501065-1 - Single Shoot 10 Zone
501070-1 - Single Shoot 08 Zone
501071-1 - Dual Shoot 08 Zone

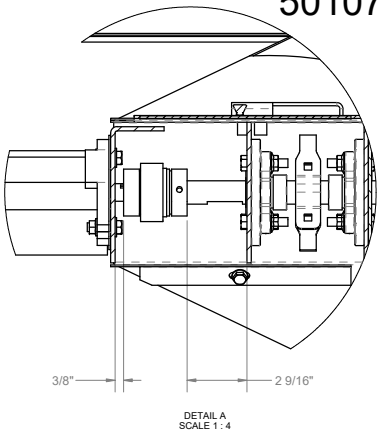

NOTE: COUPLER INSTALLATION DETAIL

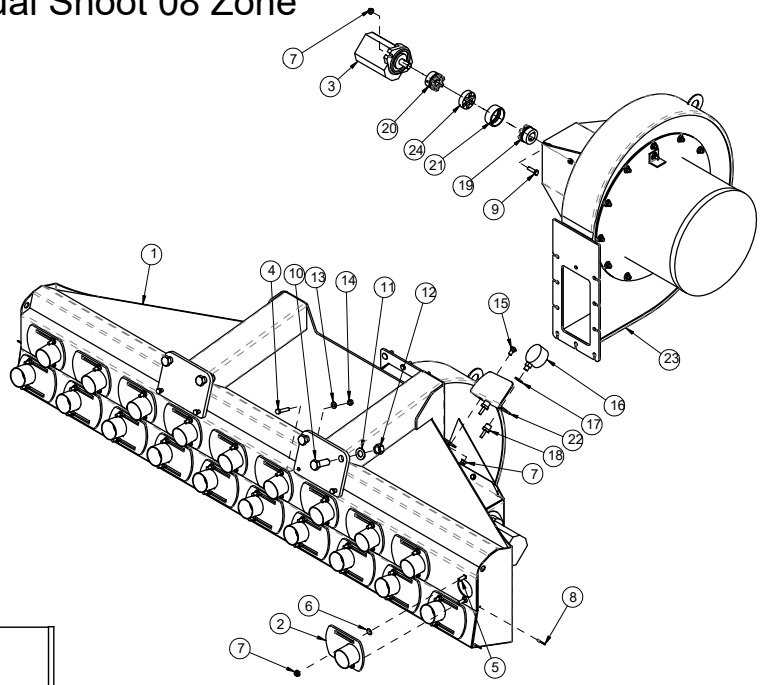

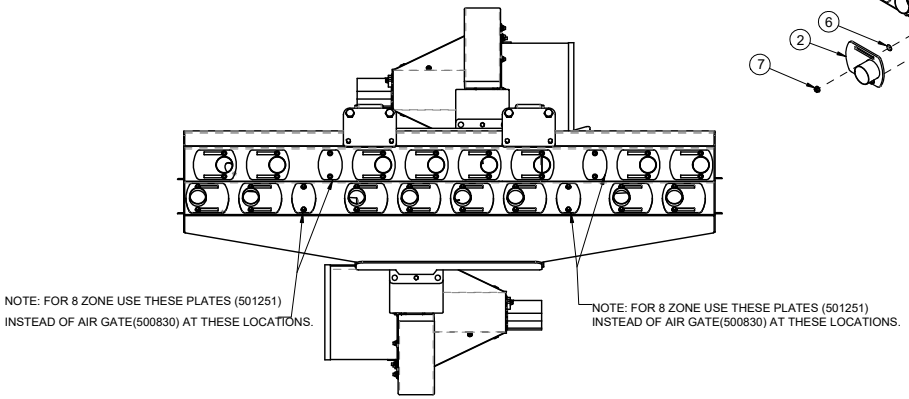

Tow Between Fans/Air Splitter

Item	Qty.	Part No.	Description	Item	Qty.	Part No.	Description
1	1	501480	ASSY, AIR SPLITTER - S3 - SINGLE - NOVA				
1	1	503650-1	ASSY, AIR SPLITTER - S3 - DUAL 8 IN - T/B NOVA - BLK				
2	20	500830	ASSY, AIR GATE - 2 1/2 IN HOSE - AIR SPLITTER - NOVA - BLK				
3	2	258404	MOTOR, HYD - 6 IN FAN - SAUER-DANFOSS - 11CC - 3/4 OUTPUT				
4	2	255920	FAN - S3 - RT-176 C/W MOTOR MNT				
5	2	255932	COUPLER, INSERT - QUICKFLEX - WHITE - S3 FAN				
6	1	503253	PLATE, FRMD 10GA - GAUGE MNT - AIR SPLITTER - DUAL S3 - T/B				
7	58	250101	BOLT, CARRIAGE - 3/8 X 1 1/4 IN UNC GR5 PL				
8	40	250635	BOLT RETAINER - 3/8 IN				
9	63	250400	NUT, FLANGE - 3/8 UNC PL				
10	4	250619	PIN, COTTER 1/8 X 1 1/4				
11	6	250019	BOLT, HEX 3/8 X 1 1/4 IN GR5 PL				
12	1	250103	BOLT, CARRIAGE - 3/8 X 3/4 IN UNC GR5 PL				
13	2	255910	GAUGE, PRESSURE - AIR - P734 2.5 0-36 OUNCES 1/4LM BRASS				
14	2	250555	WASHER, FLAT - 1/2 IN - GR8 - PL				
15	2	260090	HOSE BARB, 1/4 FPT X 1/4 HB				
16	4	250557	WASHER, FLAT - 3/8 IN GR8 PL				
17	2	255931	COUPLER, JAW - QUICKFLEX - S3 FAN - 1-1/8 SHAFT				
18	2	255930	COUPLER, JAW - QUICKFLEX - S3 FAN - 3/4 SHAFT				
19	2	255933	COUPLER, COVER - QUICKFLEX - S3 FAN				
20	4	250220	BOLT, U-SQ - 3/4 UNC X 8 ID X 10 IN -2 IN THD - GR8 PL				
21	8	250451	NUT, HEX 3/4 UNC GR5 PL				
22	8	250552	WASHER, FLAT 3/4IN GR8 PL				
-	0	503440	BDL, AIR SPLITTER - SINGLE S3 - T/B NOVA				
-	0	503450	BDL, AIR SPLITTER - DUAL S3 - T/B NOVA				

Tow Between Fans/Air Splitter

Part Number: 503450 - Dual Shoot 10 Zone
503440 - Single Shoot 10 Zone
503455 - Single Shoot 08 Zone
503250 - Dual Shoot 08 Zone

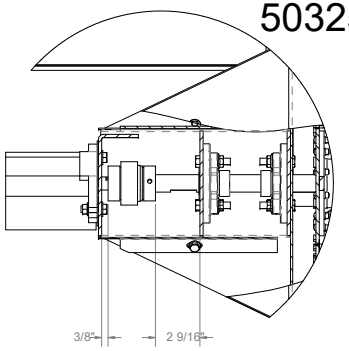

DETAIL A
SCALE 1 : 4
NOTE: COUPLER INSTALLATION DETAIL

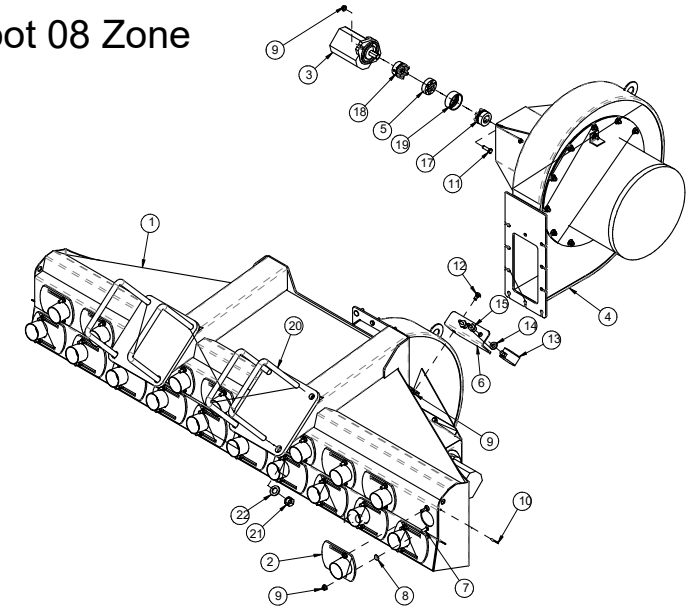

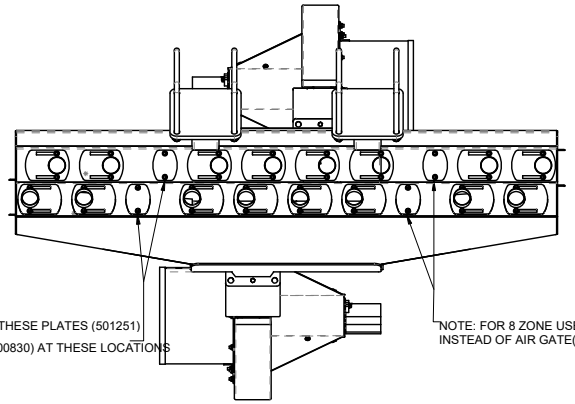

NOTE: FOR 8 ZONE USE THESE PLATES (501251)
INSTEAD OF AIR GATE(500830) AT THESE LOCATIONS

NOTE: FOR 8 ZONE USE THESE PLATES (501251)
INSTEAD OF AIR GATE(500830) AT THESE LOCATIONS

Rear Walkway - 820/560 Nova

Item	Qty.	Part No.	Description
1	1	500655	BDL, CANOLA TANK - 8 ZONE - NOVA
1	1	500655	BDL, CANOLA TANK - 8 ZONE - NOVA
1	1	500660	BDL, CANOLA TANK - 10 ZONE - NOVA
2	1	500716-5	ASSY, CANOLA TANK MNT - LH - NOVA - BLK
3	1	500715-3	ASSY, CANOLA TANK MNT - RH - NOVA - BLK
4	1	500740-7	ASSY, PLATFORM - AIR CART REAR WALKWAY
5	1	500825-1	BDL, AIR SPLITTER - DUAL S3 - NOVA
5	1	501065-1	BDL, AIR SPLITTER - SINGLE S3 - NOVA
5	1	501070-1	BDL, AIR SPLITTER - SINGLE S3 - 8 ZONE - NOVA
5	1	501071-1	BDL, AIR SPLITTER - DUAL S3 - 8 ZONE - NOVA
6	1	500771-1	ASSY, HANDRAIL - LH - REAR STAIR - NOVA
7	1	500770-1	ASSY, HANDRAIL - RH - REAR STAIR - NOVA
8	1	500764-1	ASSY, SUPPORT - REAR STAIR - NOVA - BLK
9	1	501090	ASSY, STAIR TREAD - 7 1/4 X 20 - BLK
10	2	500790	PLATE, 1/4 IN - SIDE - REAR FLIP STE
11	9	501080	ASSY, STAIR TREAD - 7 1/4 X 20 31/32 - BLK
12	1	500795-1	ASSY, HANDRAIL - RH - TOP STAIR - NOVA
13	1	500796-1	ASSY, HANDRAIL - LH - TOP STAIR - NOVA
14	1	500760-2	ASSY, HAND RAIL - REAR WALKWAY - NOVA
15	1	500280-2	ASSY, HAND RAIL - SIDE WALK - NOVA - BLK
16	1	500794	ASSY, SUPPORT - REAR STAIR - NOVA - BLK
17	2	500797	SHEET, 12AG - SPACER - NOVA REAR STAIR
18	1	500780	ASSY, REAR STAIR BRACE - NOVA XP 820
19	6	250001	BOLT, HEX 1/2 X 1 1/2 IN GR5 PL
20	16	250555	WASHER, FLAT - 1/2 IN - GR8 - PL
21	48	250036	BOLT, HEX 3/8 X 1 IN GR5 PL
22	88	250557	WASHER, FLAT - 3/8 IN GR8 PL
23	4	250450	NUT, HEX 1/2 UNC GR5 PL
24	44	250453	NUT, HEX - 3/8 UNC PL
25	1	250002	BOLT, HEX 5/8 X 3 3/4 UNC GR8 PL
26	1	250550	WASHER, FLAT 5/8 IN GR8 PL
27	1	250500	NUT, LOCK 5/8 UNC - STOVER - PL
28	2	250048	BOLT, HEX 1/2 X 2 IN GR5 PL
29	2	250000	BOLT, HEX 1/2 X 2 1/4 IN GR5 PL
30	6	250504	NUT, LOCK - 1/2 UNC - STOVER - PL
31	12	250006	BOLT, HEX 7/8 X 2 1/4 UNC GR5 PL
32	12	250553	WASHER, FLAT 7/8IN GR8 PL
33	12	250452	NUT, HEX - 7/8 UNC PL
34	10	250400	NUT, FLANGE - 3/8 UNC PL
35	6	250101	BOLT, CARRIAGE - 3/8 X 1 1/4 IN UNC GR5 PL
36	4	250003	BOLT, HEX 3/4 X 2 1/2 UNC GR5 PL
37	24	250552	WASHER, FLAT 3/4IN GR8 PL
38	12	250451	NUT, HEX 3/4 UNC GR5 PL
39	8	250047	BOLT, HEX 5/8 X 2 UNC GR5 PL
40	8	250455	NUT, HEX 5/8 UNC GR5 PL
41	4	403849	BUSH, 1.500 OD X .75 ID X 3/4 IN
42	8	250082	BOLT, HEX 3/4 X 3 3/4 UNC GR5 PL
43	4	250094	BOLT, HEX 3/4 X 4 UNF GR5 PL
44	1	500886	ASSY, PLATFORM - REAR WALKWAY - NOVA
45	1	406532	Anti-Slip Tape - 4" x 60', Black - ULINE
46	4	270173	LOAD CELL - SCALE TEC - 1.5 SB SS 3MV/V DT-06
-	0	500650	BDL, CANOLA TANK ADD ON C/W WALKWAY AND DUAL SHOOT
-	0	501060	Single Shoot 10 Zone
-	0	501077	Single Shoot 08 Zone
-	0	501078	Dual Shoot 08 Zone

Rear Walkway - 820/560 Nova

Part Number: 500650 - Dual Shoot 10 Zone
501060 - Single Shoot 10 Zone
501077 - Single Shoot 08 Zone
501078 - Dual Shoot 08 Zone

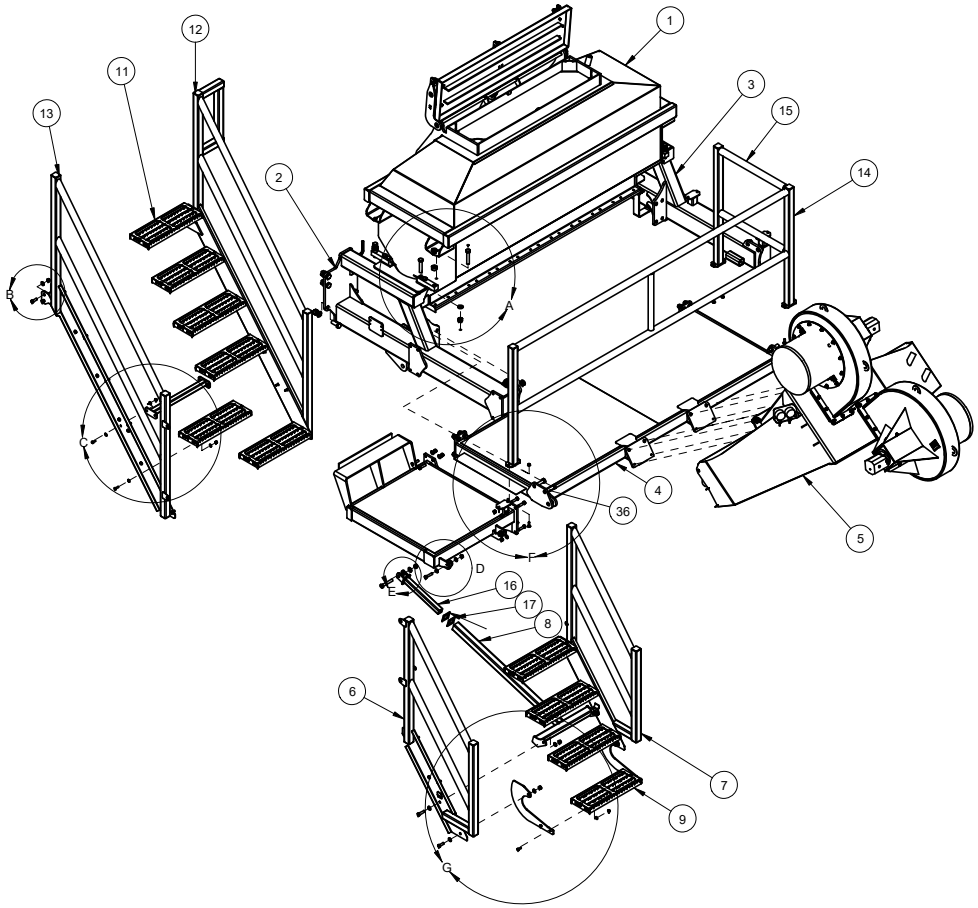

Rear Walkway - 820/560 Nova

Item	Qty.	Part No.	Description
1	1	500655	BDL, CANOLA TANK - 8 ZONE - NOVA
1	1	500655	BDL, CANOLA TANK - 8 ZONE - NOVA
1	1	500660	BDL, CANOLA TANK - 10 ZONE - NOVA
2	1	500716-5	ASSY, CANOLA TANK MNT - LH - NOVA - BLK
3	1	500715-3	ASSY, CANOLA TANK MNT - RH - NOVA - BLK
4	1	500740-7	ASSY, PLATFORM - AIR CART REAR WALKWAY
5	1	500825-1	BDL, AIR SPLITTER - DUAL S3 - NOVA
5	1	501065-1	BDL, AIR SPLITTER - SINGLE S3 - NOVA
5	1	501070-1	BDL, AIR SPLITTER - SINGLE S3 - 8 ZONE - NOVA
5	1	501071-1	BDL, AIR SPLITTER - DUAL S3 - 8 ZONE - NOVA
6	1	500771-1	ASSY, HANDRAIL - LH - REAR STAIR - NOVA
7	1	500770-1	ASSY, HANDRAIL - RH - REAR STAIR - NOVA
8	1	500764-1	ASSY, SUPPORT - REAR STAIR - NOVA - BLK
9	1	501090	ASSY, STAIR TREAD - 7 1/4 X 20 - BLK
10	2	500790	PLATE, 1/4 IN - SIDE - REAR FLIP STE
11	9	501080	ASSY, STAIR TREAD - 7 1/4 X 20 31/32 - BLK
12	1	500795-1	ASSY, HANDRAIL - RH - TOP STAIR - NOVA
13	1	500796-1	ASSY, HANDRAIL - LH - TOP STAIR - NOVA
14	1	500760-2	ASSY, HAND RAIL - REAR WALKWAY - NOVA
15	1	500280-2	ASSY, HAND RAIL - SIDE WALK - NOVA - BLK
16	1	500794	ASSY, SUPPORT - REAR STAIR - NOVA - BLK
17	2	500797	SHEET, 12AG - SPACER - NOVA REAR STAIR
18	1	500780	ASSY, REAR STAIR BRACE - NOVA XP 820
19	6	250001	BOLT, HEX 1/2 X 1 1/2 IN GR5 PL
20	16	250555	WASHER, FLAT - 1/2 IN - GR8 - PL
21	48	250036	BOLT, HEX 3/8 X 1 IN GR5 PL
22	88	250557	WASHER, FLAT - 3/8 IN GR8 PL
23	4	250450	NUT, HEX 1/2 UNC GR5 PL
24	44	250453	NUT, HEX - 3/8 UNC PL
25	1	250002	BOLT, HEX 5/8 X 3 3/4 UNC GR8 PL
26	1	250550	WASHER, FLAT 5/8 IN GR8 PL
27	1	250500	NUT, LOCK 5/8 UNC - STOVER - PL
28	2	250048	BOLT, HEX 1/2 X 2 IN GR5 PL
29	2	250000	BOLT, HEX 1/2 X 2 1/4 IN GR5 PL
30	6	250504	NUT, LOCK - 1/2 UNC - STOVER - PL
31	12	250006	BOLT, HEX 7/8 X 2 1/4 UNC GR5 PL
32	12	250553	WASHER, FLAT 7/8IN GR8 PL
33	12	250452	NUT, HEX - 7/8 UNC PL
34	10	250400	NUT, FLANGE - 3/8 UNC PL
35	6	250101	BOLT, CARRIAGE - 3/8 X 1 1/4 IN UNC GR5 PL
36	4	250003	BOLT, HEX 3/4 X 2 1/2 UNC GR5 PL
37	24	250552	WASHER, FLAT 3/4IN GR8 PL
38	12	250451	NUT, HEX 3/4 UNC GR5 PL
39	8	250047	BOLT, HEX 5/8 X 2 UNC GR5 PL
40	8	250455	NUT, HEX 5/8 UNC GR5 PL
41	4	403849	BUSH, 1.500 OD X .75 ID X 3/4 IN
42	8	250082	BOLT, HEX 3/4 X 3 3/4 UNC GR5 PL
43	4	250094	BOLT, HEX 3/4 X 4 UNF GR5 PL
44	1	500886	ASSY, PLATFORM - REAR WALKWAY - NOVA
45	1	406532	Anti-Slip Tape - 4" x 60', Black - ULINE
46	4	270173	LOAD CELL - SCALE TEC - 1.5 SB SS 3MV/V DT-06

Rear Walkway
820/560 Nova

USE HARDWARE BAG 500710, 500711, 500712

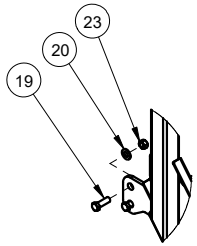

DETAIL B
SCALE 1 : 15

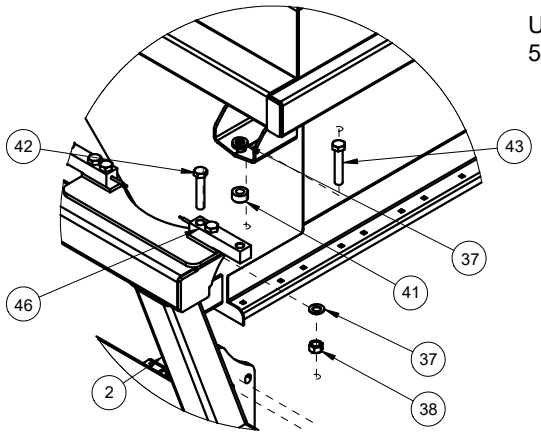

DETAIL A
SCALE 1 : 15

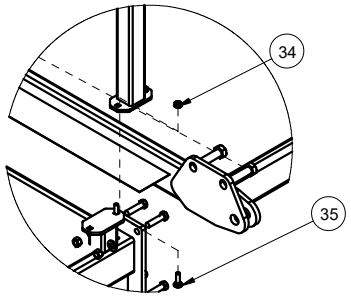

DETAIL F
SCALE 1 : 15

NOTE : SOME ITEMS SHOWN IN THIS VIEW ARE FROM BDL 403981

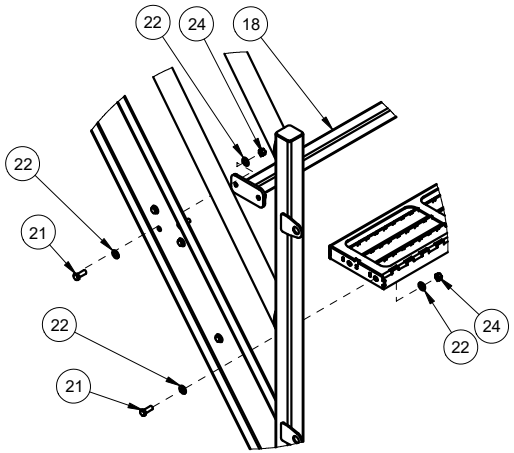

DETAIL C
SCALE 1 : 15

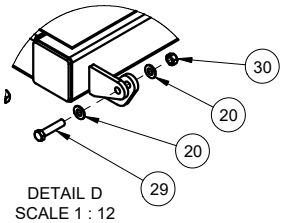

DETAIL D
SCALE 1 : 12

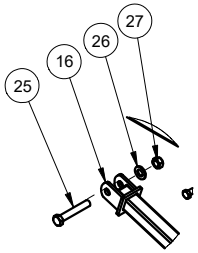

DETAIL E
SCALE 1 : 15

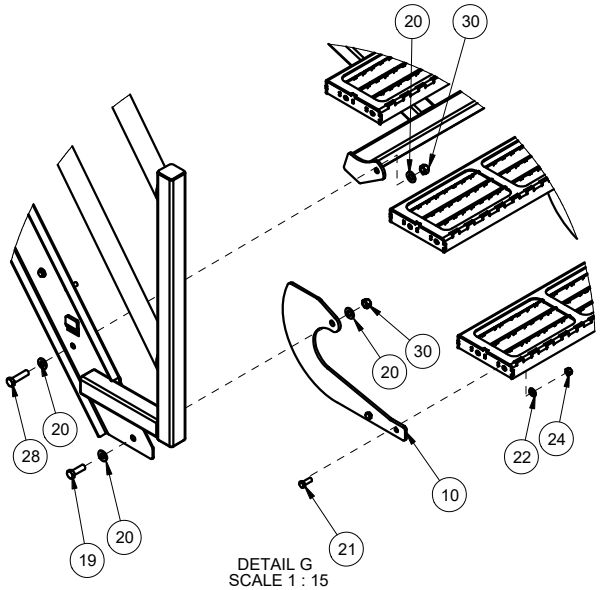

DETAIL G
SCALE 1 : 15

Rear Walkway - 780/520 Nova

Item	Qty.	Part No.	Description	Item	Qty.	Part No.	Description
1	1	501005-6	ASSY, FAN AND STAIR MOUNT - 780 BU NOVA				
2	1	500825-1	BDL, AIR SPLITTER - DUAL S3 - NOVA				
2	1	501065-1	BDL, AIR SPLITTER - SINGLE S3 - NOVA				
2	1	501070-1	BDL, AIR SPLITTER - SINGLE S3 - 8 ZONE - NOVA				
2	1	501071-1	BDL, AIR SPLITTER - DUAL S3 - 8 ZONE - NOVA				
3	1	501015	ASSY, SINGLE SHOOT HANDRAIL RH - NOVA - BLK				
4	1	501090	ASSY, STAIR TREAD - 7 1/4 X 20 - BLK				
5	2	500790	PLATE, 1/4 IN - SIDE - REAR FLIP STE				
6	9	501080	ASSY, STAIR TREAD - 7 1/4 X 20 31/32 - BLK				
7	1	501020	ASSY, SINGLE SHOOT HANDRAIL LH - NOVA - BLK				
8	6	250450	NUT, HEX 1/2 UNC GR5 PL				
9	6	250001	BOLT, HEX 1/2 X 1 1/2 IN GR5 PL				
10	10	250555	WASHER, FLAT - 1/2 IN - GR8 - PL				
11	2	250504	NUT, LOCK - 1/2 UNC - STOVER - PL				
12	2	250013	BOLT, HEX 1/2 X 1 1/4 IN GR5 PL				
13	12	250006	BOLT, HEX 7/8 X 2 1/4 UNC GR5 PL				
14	12	250452	NUT, HEX - 7/8 UNC PL				
15	12	250553	WASHER, FLAT 7/8IN GR8 PL				
16	40	250453	NUT, HEX - 3/8 UNC PL				
17	80	250557	WASHER, FLAT - 3/8 IN GR8 PL				
18	40	250036	BOLT, HEX 3/8 X 1 IN GR5 PL				
-	0	501000	BDL, SINGLE SHOOT AIRSPLITTER AND STAIRS - 780BU				
-	0	501050	BDL, DUAL FAN AND STAIR MOUNT - 780BU NOVA				
-	0	501075	BDL, SINGLE SHOOT AIRSPLITTER AND STAIRS - 8 ZONE				
-	0	501076	BDL, DUAL FAN AND STAIR MOUNT - 8 ZONE- 520/780BU				

Rear Walkway - 780/520 Nova

Part Number: 501050 - Dual Shoot 10 Zone
501000 - Single Shoot 10 Zone
501075 - Single Shoot 08 Zone
501076 - Dual Shoot 08 Zone

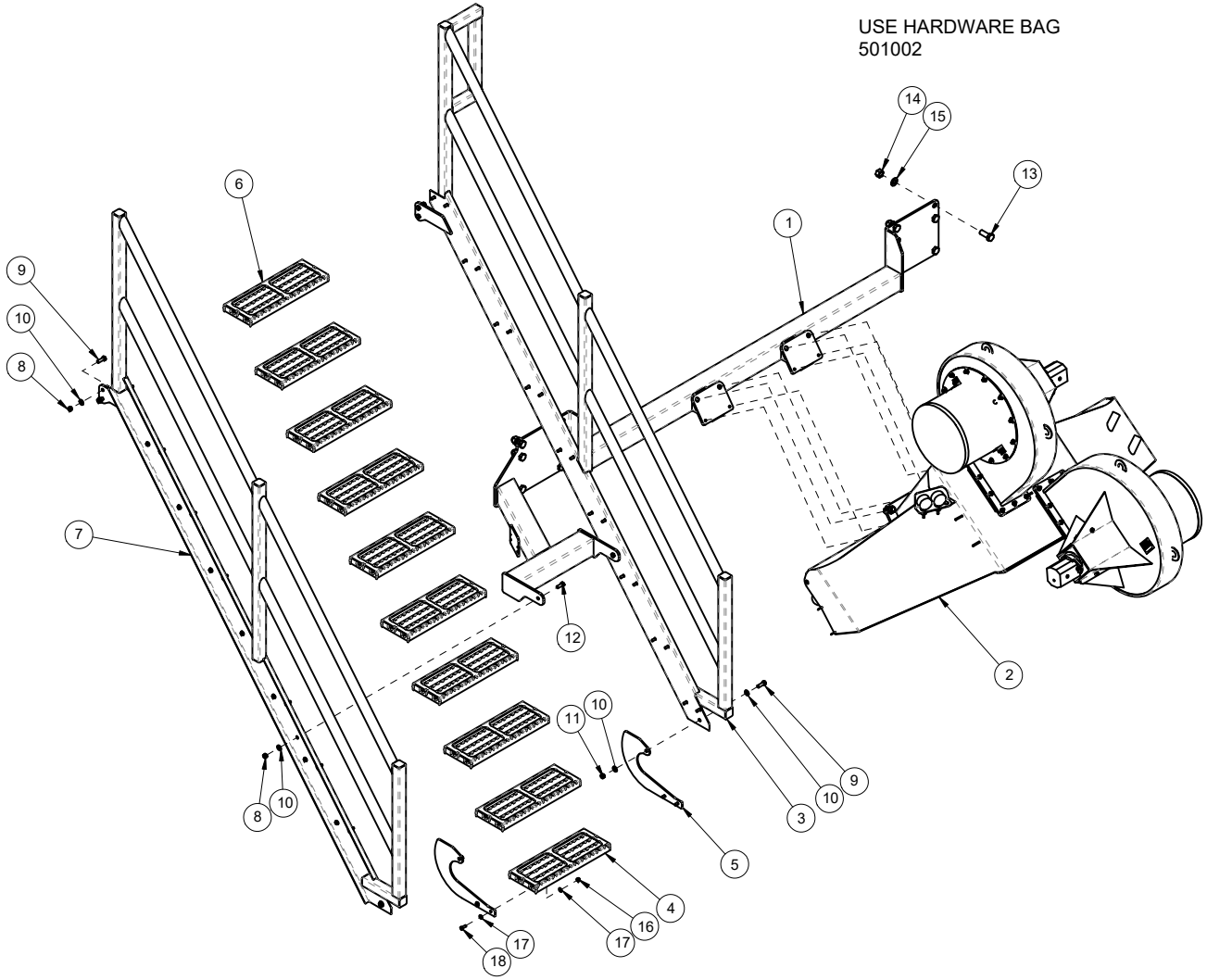

Side Walkway - 780/520 Nova

Item	Qty.	Part No.	Description	Item	Qty.	Part No.	Description
1	1	500290-4	ASSY, MOUNT - FRT - SIDE WALK - N				
2	1	500282	ASSY, HAND RAIL - SIDE WALK - NOV				
3	1	500270	ASSY, SIDE HAND RAIL - NOVA - 780/820BU - BLK				
4	1	500300-5	ASSY, MNT - REAR - SIDE WALK - NO				
5	1	500250-4	ASSY, PLATFORM - SIDE WALKWAY - NOVA - 780/820BU - BLK				
6	1	500285	PLATE, FRMD 3/8 IN - BRACKET - SID				
7	2	501620	BDL, BETWEEN TANK STEP - NOVA				
8	4	250232	BOLT, U-SQ - 3/4 UNC X 12 ID X 10 IN - 2 IN THD - GR8 PL				
9	8	250552	WASHER, FLAT 3/4IN GR8 PL				
10	8	250451	NUT, HEX 3/4 UNC GR5 PL				
11	8	250104	BOLT, CARRIAGE - 1/2 X 1 1/2IN UNC GR5 PL				
12	8	250401	NUT, FLANGE - 1/2 UNC PL				
13	8	250101	BOLT, CARRIAGE - 3/8 X 1 1/4 IN UNC GR5 PL				
14	12	250400	NUT, FLANGE - 3/8 UNC PL				
15	4	250019	BOLT, HEX 3/8 X 1 1/4 IN GR5 PL				
16	1	500289	PLATE, FRMD 3/8 IN - U-BRACKET - S				

Side Walkway - 780/520 Nova
Part Number: 500245

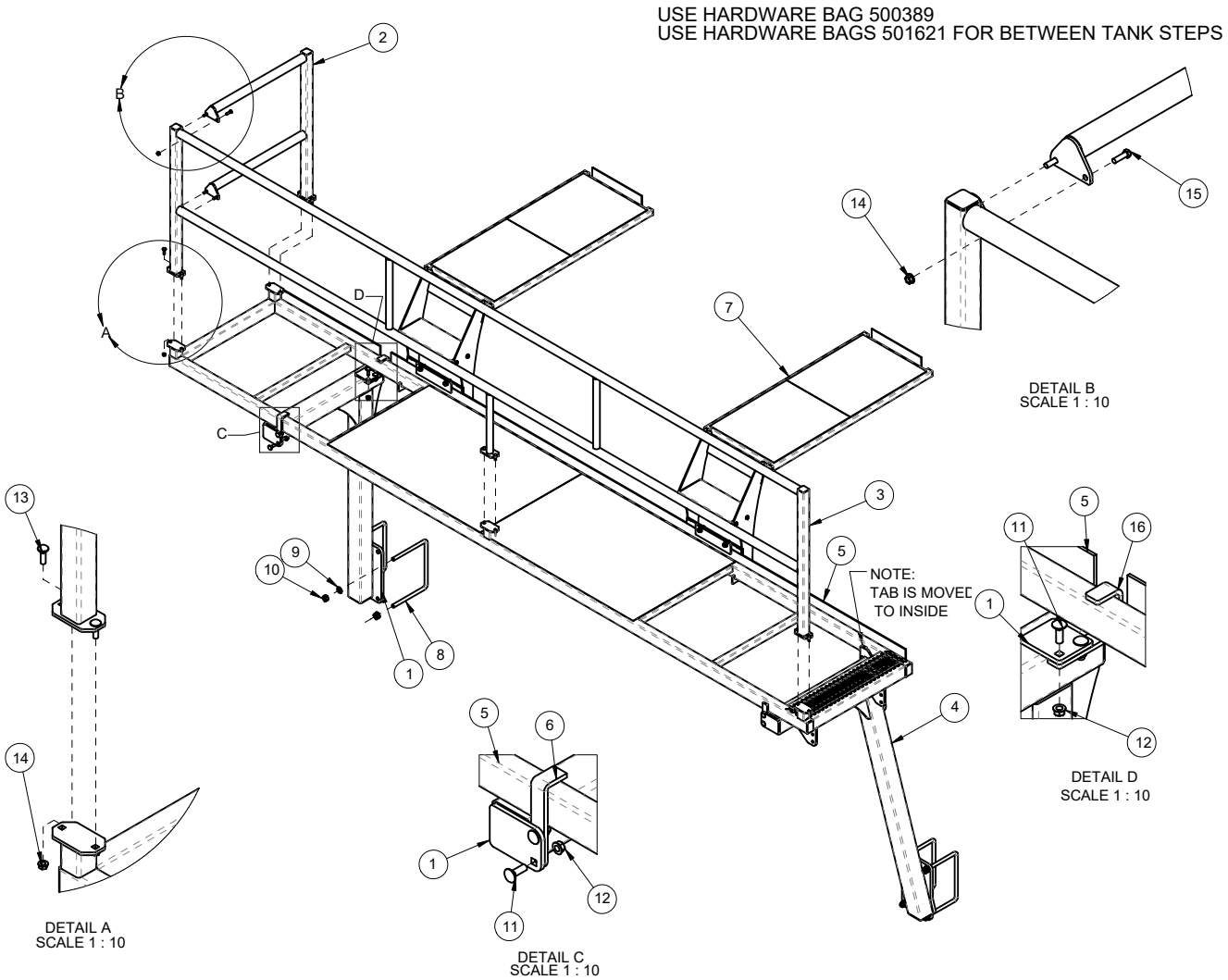

Side Walkway - 630 Tow Between Nova

Item	Qty.	Part No.	Description	Item	Qty.	Part No.	Description
1	1	503810-1	ASSY, PLATFORM - SIDE WALKWAY				
2	1	500300-5	ASSY, MNT - REAR - SIDE WALK - NO				
3	1	500290-4	ASSY, MOUNT - FRT - SIDE WALK - N				
4	1	500285	PLATE, FRMD 3/8 IN - BRACKET - SID				
5	1	503220	ASSY, HAND RAIL - RH - T/B NOVA - BLK				
6	1	503815-1	ASSY, SIDE HAND RAIL - SIDE WALKW				
7	1	500282	ASSY, HAND RAIL - SIDE WALK - NOV				
8	1	503230	ASSY, HAND RAIL LH - T/B NOVA - BLK				
9	8	501080	ASSY, STAIR TREAD - 7 1/4 X 20 31/32 - BLK				
10	1	503240-1	ASSY, FRONT HANDRAIL - T/B NOVA				
11	1	501090	ASSY, STAIR TREAD - 7 1/4 X 20 - BLK				
12	2	500790	PLATE, 1/4 IN - SIDE - REAR FLIP STE				
13	1	503205-1	ASSY, REAR MNT - SIDE WALKWAY -				
14	8	250104	BOLT, CARRIAGE - 1/2 X 1 1/2IN UNC GR5 PL				
15	36	250453	NUT, HEX - 3/8 UNC PL				
16	72	250557	WASHER, FLAT - 3/8 IN GR8 PL				
17	36	250036	BOLT, HEX 3/8 X 1 IN GR5 PL				
18	2	250013	BOLT, HEX 1/2 X 1 1/4 IN GR5 PL				
19	6	250450	NUT, HEX 1/2 UNC GR5 PL				
20	10	250555	WASHER, FLAT - 1/2 IN - GR8 - PL				
21	5	250232	BOLT, U-SQ - 3/4 UNC X 12 ID X 10 IN - 2 IN THD - GR8 PL				
22	10	250451	NUT, HEX 3/4 UNC GR5 PL				
23	10	250552	WASHER, FLAT 3/4IN GR8 PL				
24	8	250401	NUT, FLANGE - 1/2 UNC PL				
25	10	250101	BOLT, CARRIAGE - 3/8 X 1 1/4 IN UNC GR5 PL				
26	18	250400	NUT, FLANGE - 3/8 UNC PL				
27	8	250019	BOLT, HEX 3/8 X 1 1/4 IN GR5 PL				
28	6	250001	BOLT, HEX 1/2 X 1 1/2 IN GR5 PL				
29	2	250504	NUT, LOCK - 1/2 UNC - STOVER - PL				
30	2	501620	BDL, BETWEEN TANK STEP - NOVA				
31	1	500289	PLATE, FRMD 3/8 IN - U-BRACKET - S				

Side Walkway - 630 Tow Between Nova
Part Number: 503200

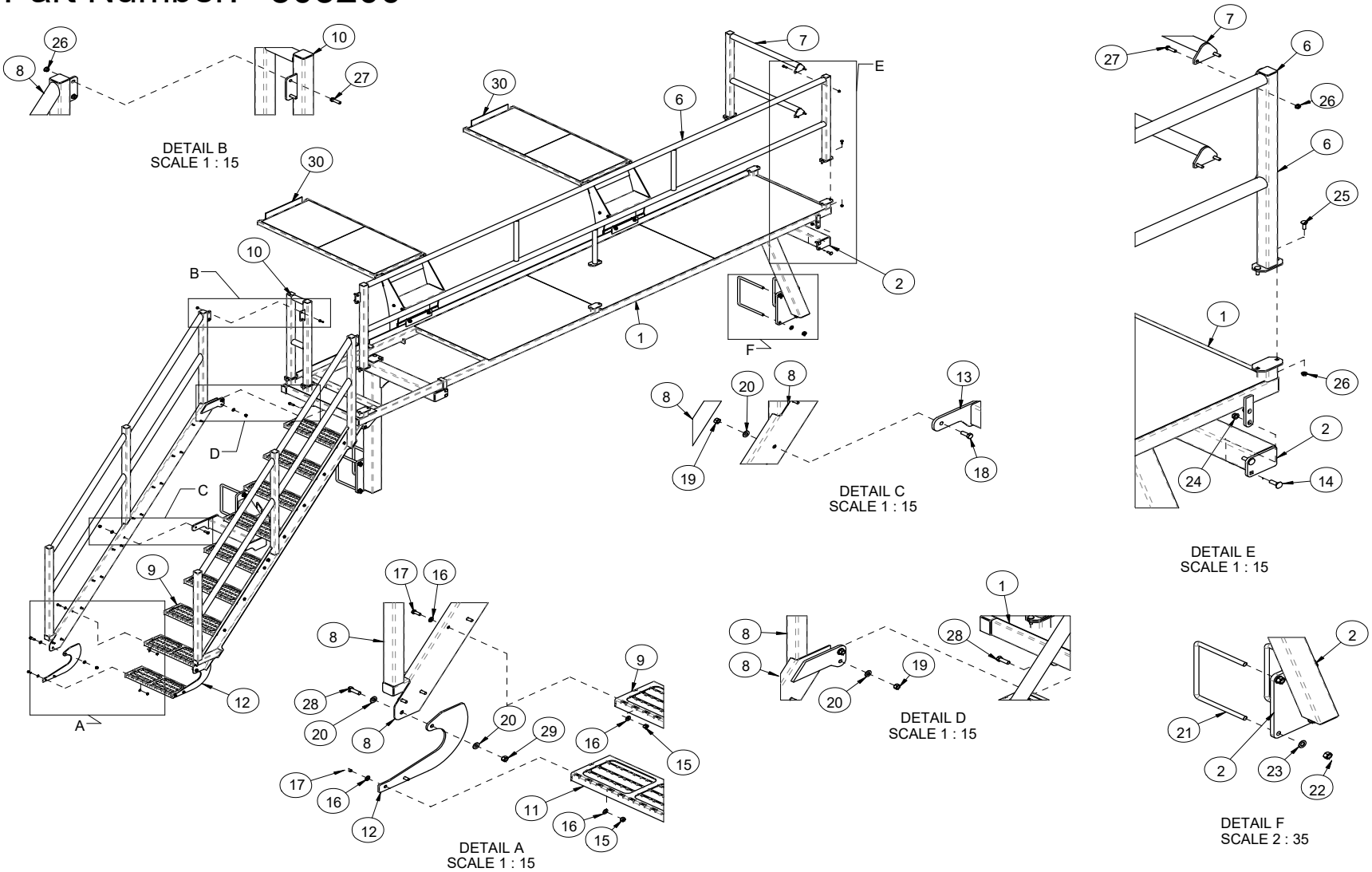

Side Walkway - 780 Tow Between Nova

Item	Qty.	Part No.	Description	Item	Qty.	Part No.	Description
1	1	503810-1	ASSY, PLATFORM - SIDE WALKWAY				
2	1	500300-5	ASSY, MNT - REAR - SIDE WALK - NO				
3	1	500290-4	ASSY, MOUNT - FRT - SIDE WALK - N				
4	1	500285	PLATE, FRMD 3/8 IN - BRACKET - SID				
5	1	503220	ASSY, HAND RAIL - RH - T/B NOVA - BLK				
6	1	503815-1	ASSY, SIDE HAND RAIL - SIDE WALKW				
7	1	500282	ASSY, HAND RAIL - SIDE WALK - NOV				
8	1	503230	ASSY, HAND RAIL LH - T/B NOVA - BLK				
9	8	501080	ASSY, STAIR TREAD - 7 1/4 X 20 31/32 - BLK				
10	1	503240-1	ASSY, FRONT HANDRAIL - T/B NOVA				
11	1	501090	ASSY, STAIR TREAD - 7 1/4 X 20 - BLK				
12	2	500790	PLATE, 1/4 IN - SIDE - REAR FLIP STE				
13	1	503205-1	ASSY, REAR MNT - SIDE WALKWAY -				
14	8	250104	BOLT, CARRIAGE - 1/2 X 1 1/2IN UNC GR5 PL				
15	36	250453	NUT, HEX - 3/8 UNC PL				
16	72	250557	WASHER, FLAT - 3/8 IN GR8 PL				
17	36	250036	BOLT, HEX 3/8 X 1 IN GR5 PL				
18	2	250013	BOLT, HEX 1/2 X 1 1/4 IN GR5 PL				
19	6	250450	NUT, HEX 1/2 UNC GR5 PL				
20	10	250555	WASHER, FLAT - 1/2 IN - GR8 - PL				
21	5	250232	BOLT, U-SQ - 3/4 UNC X 12 ID X 10 IN - 2 IN THD - GR8 PL				
22	10	250451	NUT, HEX 3/4 UNC GR5 PL				
23	10	250552	WASHER, FLAT 3/4IN GR8 PL				
24	8	250401	NUT, FLANGE - 1/2 UNC PL				
25	10	250101	BOLT, CARRIAGE - 3/8 X 1 1/4 IN UNC GR5 PL				
26	18	250400	NUT, FLANGE - 3/8 UNC PL				
27	8	250019	BOLT, HEX 3/8 X 1 1/4 IN GR5 PL				
28	6	250001	BOLT, HEX 1/2 X 1 1/2 IN GR5 PL				
29	2	250504	NUT, LOCK - 1/2 UNC - STOVER - PL				
30	2	501620	BDL, BETWEEN TANK STEP - NOVA				
31	1	500289	PLATE, FRMD 3/8 IN - U-BRACKET - S				

Side Walkway - 780 Tow Between Nova
Part Number: 503800

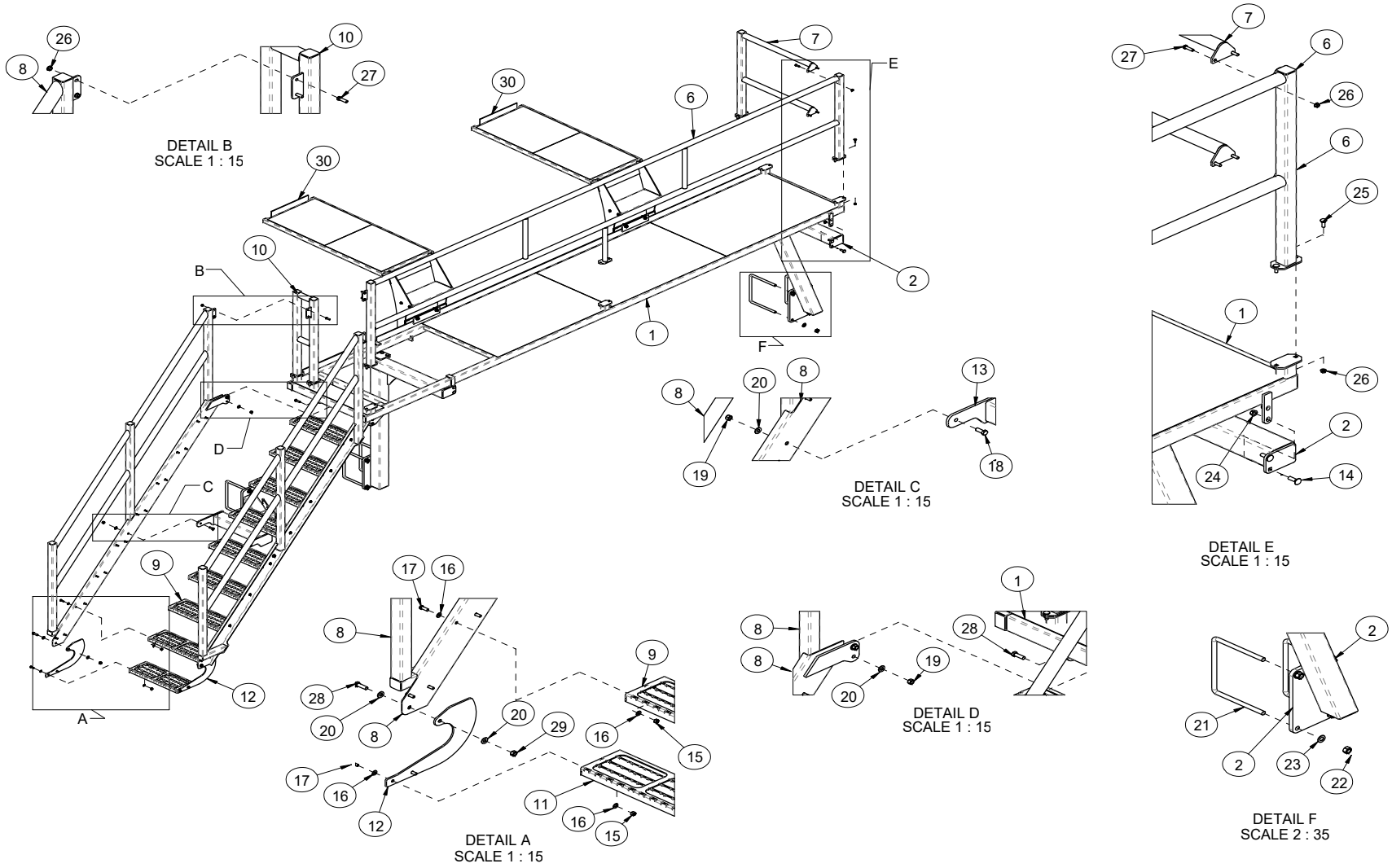

Long Conveyor - 780/820 Nova

Item	Qty.	Part No.	Description
1	1	529800	CONVEYOR, CONVEYALL - TCP1628
2	1	503910-3	ASSY, MAIN MOUNT - LONG CONVEYOR
3	1	503920-1	ASSY, MAIN ARM MOUNT
4	1	503930	ASSY, SECD ARM - LONG CONVEYOR MNT
5	1	503935	ASSY, PIVOT MOUNT - SMT FILL CON
6	1	503940	ASSY, MOUNT POST - CONVEYOR LATCH - BLK
7	1	501361-1	PLATE, 3/8 IN - BTM BUMPER MNT - CONVEYOR - BLK
8	1	503950-2	ASSY, CONTROL VALVE MOUNT
9	1	501215-2	ASSY, CONVEYOR TILT PIN
10	4	503967	ASSY, PIVOT PIN - GREASED
11	1	501114-6	PLATE, FRMD 1/4 IN - BTM BUMPER HOLDER - CONVEYOR - BLK
12	1	258506	MANIFOLD, HYD - 4 VALVE D03 - CONVEYOR CONTROL
13	1	501178	PAD, WEAR 1/4 IN - UHMW - CONVEYOR PIVOT
14	2	258510	CYL, HYD 3 X 24 IN - WING LIFT
15	1	258550	CYL, HYD 2 1/2 X 8 IN
16	5	501225-1	PLATE, FRMD 12 GA - 3/4 IN HYD HOSE CLAMP
17	7	258394	HOSE CLAMP - 2 HALVES - 3/4" HOSE - 428,5 / 28,5 PAH
18	5	258396	HOSE CLAMP - COVER PLATE - GD4DW3
19	13	258398	HOSE CLAMP - 2 HALVES - 1/4" HOSE
20	11	258399	HOSE CLAMP - COVER PLATE - 2D
21	2	250084	BOLT, HEX 5/16 X 2 1/2 UNC GR5 PL
22	7	250099	BOLT, HEX 5/16 X 1 3/4 UNC GR5 PL
23	10	250658	SCREW, TEK - 1/4 X 1 IN
24	5	250073	BOLT, HEX 5/16 X 2 UNC GR5 PL
25	4	250128	BOLT, HEX 5/16 X 3 IN UNC GR5 PL
26	4	250601	BUSH, 1 1/2OD X 1 1/4ID X 7/8 IN - CONNEX
27	2	400234-1	WASHER, TRIP 1/4 IN - UHMW
28	4	250152	BOLT, HEX 1/2 X 3 3/4 IN UNC GR5 PL
29	4	250504	NUT, LOCK - 1/2 UNC - STOVER - PL
30	14	250555	WASHER, FLAT - 1/2 IN - GR8 - PL
31	13	250450	NUT, HEX 1/2 UNC GR5 PL
32	8	250232	BOLT, U-SQ - 3/4 UNC X 12 ID X 10 IN - 2 IN THD - GR8 PL
33	18	250552	WASHER, FLAT 3/4IN GR8 PL
34	18	250451	NUT, HEX 3/4 UNC GR5 PL
35	7	250001	BOLT, HEX 1/2 X 1 1/2 IN GR5 PL
36	1	250048	BOLT, HEX 1/2 X 2 IN GR5 PL
37	4	250019	BOLT, HEX 3/8 X 1 1/4 IN GR5 PL
38	19	250557	WASHER, FLAT - 3/8 IN GR8 PL
39	10	250453	NUT, HEX - 3/8 UNC PL
40	1	250013	BOLT, HEX 1/2 X 1 1/4 IN GR5 PL
41	1	250039	BOLT, HEX 3/8 X 2 IN GR5 PL
42	1	250503	NUT, LOCK - 3/8 UNC - STOVER - PL
43	2	250234	BOLT, U-SQ - 1/2 UNC X 12 ID X 8 IN - 2 IN THD - GR5 PL
44	2	250047	BOLT, HEX 5/8 X 2 UNC GR5 PL
45	2	250550	WASHER, FLAT 5/8 IN GR8 PL
46	2	250455	NUT, HEX 5/8 UNC GR5 PL
47	4	250093	BOLT, HEX 3/8 X 1 3/4 IN GR5 PL
48	2	250628	BUSH, SLEEVE - PLASTIC - 3ID X 3 3/16OD X 2 IN
49	1	250621	PIN, COILED SPRING - 1/4 X 3 1/2 IN - PL
50	2	250633	SCREW, MACHINE 10-32 X 1 IN - PLATED
51	2	250634	NUT, MACHINE 10-32 - PLATED
52	1	503960	ASSY, LOCK CLAMP - CONVEYOR LATCH
53	1	258551	CYL, HYD 2 X 4 IN - FILL AUGER
54	1	258551	CYL, HYD 2 X 4 IN - FILL AUGER
55	2	250689	BUSH, 1 IN O.D. 3/4 IN I.D. - IGUS - JSI-1216-16
56	1	503970-1	ASSY, MAIN LATCH CLAMP - CONVEYOR - BLK
57	1	503980-1	ASSY, MAIN LATCH HOOK - LONG CONVEYOR - YEL
58	1	259853	BUMPER, 3/4 IN UHMW - BOTTOM - CONVEYOR
59	1	259854	BUMPER, 3/4 IN UHMW - SIDE - CONVEYOR
60	1	501224	PLATE, FRMD 1/4 IN - BUMPER GUIDE - CONVEYOR - BLK
61	1	250101	BOLT, CARRIAGE - 3/8 X 1 1/4 IN UNC GR5 PL
62	1	258509	VALVE, CONVEYOR BELT ON/OFF CONTROL
63	1	501238	PLATE, BOLT 1/4 IN - ROAD TRANSPORT MNT - BLK
64	1	501239	PLATE, FRMD 1/4 IN - ROAD TRANSPORT LOCK - BLK
65	2	250036	BOLT, HEX 3/8 X 1 IN GR5 PL
66	4	250558	WASHER, FLAT - 5/16 IN - GR8 PL
67	2	250460	NUT, HEX - 5/16 UNC PL
68	2	250004	BOLT, HEX 3/4 X 2 3/4 UNC GR5 PL
69	1	280010	KAR-TECH REMOTE SYSTEM, 10 BUTTON
70	1	503964	UHMW, STOPPER PAD

Long Conveyor - 780/820 Nova
Part Number: 503900-3

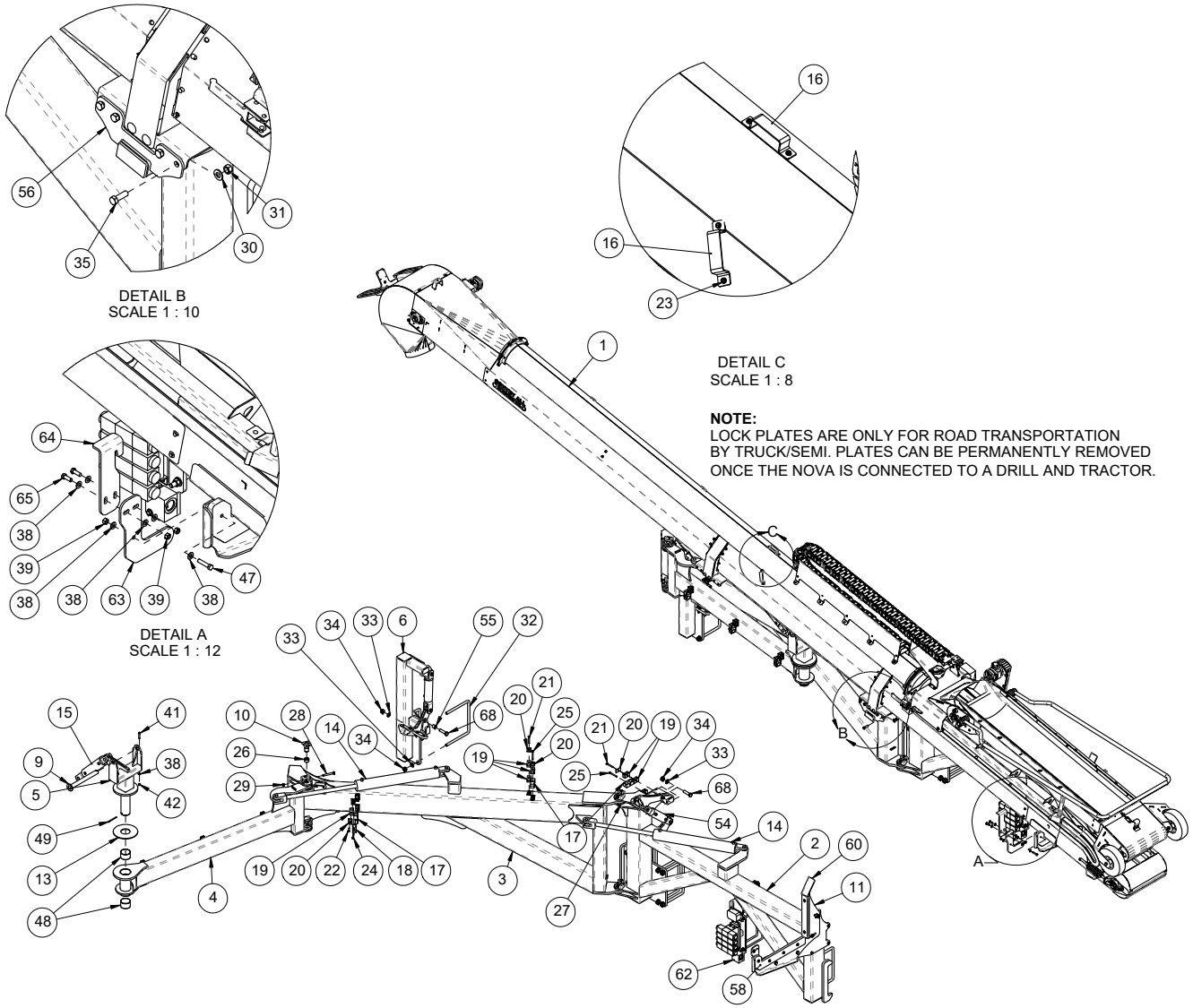

NOTE:
LOCK PLATES ARE ONLY FOR ROAD TRANSPORTATION BY TRUCK/SEMI. PLATES CAN BE PERMANENTLY REMOVED ONCE THE NOVA IS CONNECTED TO A DRILL AND TRACTOR.

Long Conveyor - 780/820 Nova

Item	Qty.	Part No.	Description
1	1	529800	CONVEYOR, CONVEYALL - TCP1628
2	1	503910-3	ASSY, MAIN MOUNT - LONG CONVEYOR
3	1	503920-1	ASSY, MAIN ARM MOUNT
4	1	503930	ASSY, SECD ARM - LONG CONVEYOR MNT
5	1	503935	ASSY, PIVOT MOUNT - SMT FILL CON
6	1	503940	ASSY, MOUNT POST - CONVEYOR LATCH - BLK
7	1	501361-1	PLATE, 3/8 IN - BTM BUMPER MNT - CONVEYOR - BLK
8	1	503950-2	ASSY, CONTROL VALVE MOUNT
9	1	501215-2	ASSY, CONVEYOR TILT PIN
10	4	503967	ASSY, PIVOT PIN - GREASED
11	1	501114-6	PLATE, FRMD 1/4 IN - BTM BUMPER HOLDER - CONVEYOR - BLK
12	1	258506	MANIFOLD, HYD - 4 VALVE D03 - CONVEYOR CONTROL
13	1	501178	PAD, WEAR 1/4 IN - UHMW - CONVEYOR PIVOT
14	2	258510	CYL, HYD 3 X 24 IN - WING LIFT
15	1	258550	CYL, HYD 2 1/2 X 8 IN
16	5	501225-1	PLATE, FRMD 12 GA - 3/4 IN HYD HOSE CLAMP
17	7	258394	HOSE CLAMP - 2 HALVES - 3/4" HOSE - 428,5 / 28,5 PAH
18	5	258396	HOSE CLAMP - COVER PLATE - GD4DW3
19	13	258398	HOSE CLAMP - 2 HALVES - 1/4" HOSE
20	11	258399	HOSE CLAMP - COVER PLATE - 2D
21	2	250084	BOLT, HEX 5/16 X 2 1/2 UNC GR5 PL
22	7	250099	BOLT, HEX 5/16 X 1 3/4 UNC GR5 PL
23	10	250658	SCREW, TEK - 1/4 X 1 IN
24	5	250073	BOLT, HEX 5/16 X 2 UNC GR5 PL
25	4	250128	BOLT, HEX 5/16 X 3 IN UNC GR5 PL
26	4	250601	BUSH, 1 1/2OD X 1 1/4ID X 7/8 IN - CONNEX
27	2	400234-1	WASHER, TRIP 1/4 IN - UHMW
28	4	250152	BOLT, HEX 1/2 X 3 3/4 IN UNC GR5 PL
29	4	250504	NUT, LOCK - 1/2 UNC - STOVER - PL
30	14	250555	WASHER, FLAT - 1/2 IN - GR8 - PL
31	13	250450	NUT, HEX 1/2 UNC GR5 PL
32	8	250232	BOLT, U-SQ - 3/4 UNC X 12 ID X 10 IN - 2 IN THD - GR8 PL
33	18	250552	WASHER, FLAT 3/4IN GR8 PL
34	18	250451	NUT, HEX 3/4 UNC GR5 PL
35	7	250001	BOLT, HEX 1/2 X 1 1/2 IN GR5 PL
36	1	250048	BOLT, HEX 1/2 X 2 IN GR5 PL
37	4	250019	BOLT, HEX 3/8 X 1 1/4 IN GR5 PL
38	19	250557	WASHER, FLAT - 3/8 IN GR8 PL
39	10	250453	NUT, HEX - 3/8 UNC PL
40	1	250013	BOLT, HEX 1/2 X 1 1/4 IN GR5 PL
41	1	250039	BOLT, HEX 3/8 X 2 IN GR5 PL
42	1	250503	NUT, LOCK - 3/8 UNC - STOVER - PL
43	2	250234	BOLT, U-SQ - 1/2 UNC X 12 ID X 8 IN - 2 IN THD - GR5 PL
44	2	250047	BOLT, HEX 5/8 X 2 UNC GR5 PL
45	2	250550	WASHER, FLAT 5/8 IN GR8 PL
46	2	250455	NUT, HEX 5/8 UNC GR5 PL
47	4	250093	BOLT, HEX 3/8 X 1 3/4 IN GR5 PL
48	2	250628	BUSH, SLEEVE - PLASTIC - 3ID X 3 3/16OD X 2 IN
49	1	250621	PIN, COILED SPRING - 1/4 X 3 1/2 IN - PL
50	2	250633	SCREW, MACHINE 10-32 X 1 IN - PLATED
51	2	250634	NUT, MACHINE 10-32 - PLATED
52	1	503960	ASSY, LOCK CLAMP - CONVEYOR LATCH
53	1	258551	CYL, HYD 2 X 4 IN - FILL AUGER
54	1	258551	CYL, HYD 2 X 4 IN - FILL AUGER
55	2	250689	BUSH, 1 IN O.D. 3/4 IN I.D. - IGUS - JSI-1216-16
56	1	503970-1	ASSY, MAIN LATCH CLAMP - CONVEYOR - BLK
57	1	503980-1	ASSY, MAIN LATCH HOOK - LONG CONVEYOR - YEL
58	1	259853	BUMPER, 3/4 IN UHMW - BOTTOM - CONVEYOR
59	1	259854	BUMPER, 3/4 IN UHMW - SIDE - CONVEYOR
60	1	501224	PLATE, FRMD 1/4 IN - BUMPER GUIDE - CONVEYOR - BLK
61	1	250101	BOLT, CARRIAGE - 3/8 X 1 1/4 IN UNC GR5 PL
62	1	258509	VALVE, CONVEYOR BELT ON/OFF CONTROL
63	1	501238	PLATE, BOLT 1/4 IN - ROAD TRANSPORT MNT - BLK
64	1	501239	PLATE, FRMD 1/4 IN - ROAD TRANSPORT LOCK - BLK
65	2	250036	BOLT, HEX 3/8 X 1 IN GR5 PL
66	4	250558	WASHER, FLAT - 5/16 IN - GR8 PL
67	2	250460	NUT, HEX - 5/16 UNC PL
68	2	250004	BOLT, HEX 3/4 X 2 3/4 UNC GR5 PL
69	1	280010	KAR-TECH REMOTE SYSTEM, 10 BUTTON
70	1	503964	UHMW, STOPPER PAD

Long Conveyor - 780/820 Nova
Part Number: 503900-3

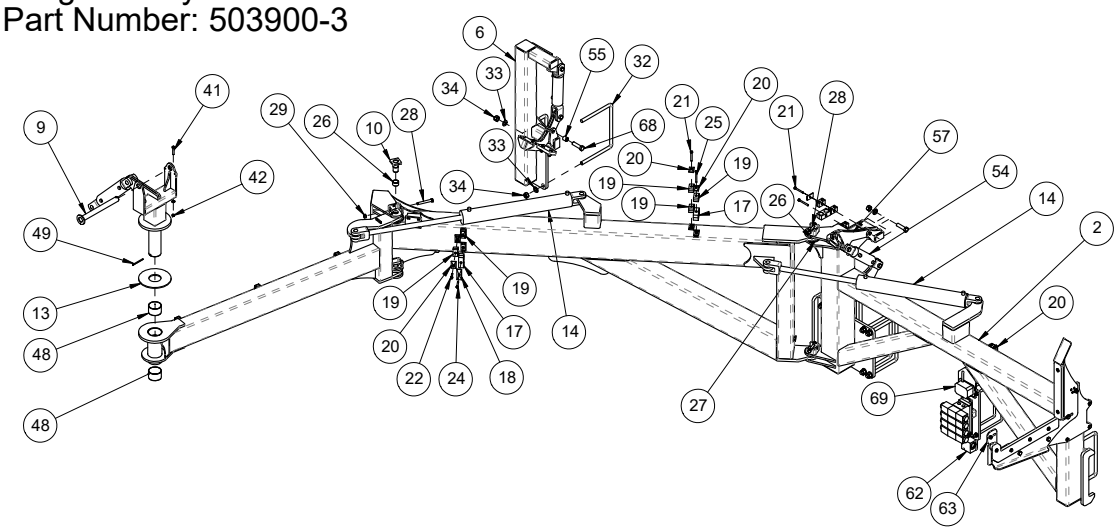

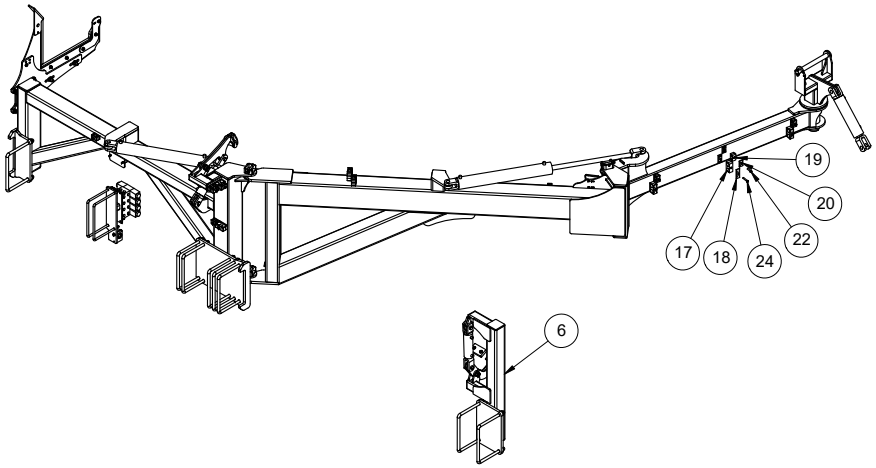

Long Conveyor - 780/820 Nova

Item	Qty.	Part No.	Description
1	1	529800	CONVEYOR, CONVEYALL - TCP1628
2	1	503910-3	ASSY, MAIN MOUNT - LONG CONVEYOR
3	1	503920-1	ASSY, MAIN ARM MOUNT
4	1	503930	ASSY, SECD ARM - LONG CONVEYOR MNT
5	1	503935	ASSY, PIVOT MOUNT - SMT FILL CON
6	1	503940	ASSY, MOUNT POST - CONVEYOR LATCH - BLK
7	1	501361-1	PLATE, 3/8 IN - BTM BUMPER MNT - CONVEYOR - BLK
8	1	503950-2	ASSY, CONTROL VALVE MOUNT
9	1	501215-2	ASSY, CONVEYOR TILT PIN
10	4	503967	ASSY, PIVOT PIN - GREASED
11	1	501114-6	PLATE, FRMD 1/4 IN - BTM BUMPER HOLDER - CONVEYOR - BLK
12	1	258506	MANIFOLD, HYD - 4 VALVE D03 - CONVEYOR CONTROL
13	1	501178	PAD, WEAR 1/4 IN - UHMW - CONVEYOR PIVOT
14	2	258510	CYL, HYD 3 X 24 IN - WING LIFT
15	1	258550	CYL, HYD 2 1/2 X 8 IN
16	5	501225-1	PLATE, FRMD 12 GA - 3/4 IN HYD HOSE CLAMP
17	7	258394	HOSE CLAMP - 2 HALVES - 3/4" HOSE - 428,5 / 28,5 PAH
18	5	258396	HOSE CLAMP - COVER PLATE - GD4DW3
19	13	258398	HOSE CLAMP - 2 HALVES - 1/4" HOSE
20	11	258399	HOSE CLAMP - COVER PLATE - 2D
21	2	250084	BOLT, HEX 5/16 X 2 1/2 UNC GR5 PL
22	7	250099	BOLT, HEX 5/16 X 1 3/4 UNC GR5 PL
23	10	250658	SCREW, TEK - 1/4 X 1 IN
24	5	250073	BOLT, HEX 5/16 X 2 UNC GR5 PL
25	4	250128	BOLT, HEX 5/16 X 3 IN UNC GR5 PL
26	4	250601	BUSH, 1 1/2OD X 1 1/4ID X 7/8 IN - CONNEX
27	2	400234-1	WASHER, TRIP 1/4 IN - UHMW
28	4	250152	BOLT, HEX 1/2 X 3 3/4 IN UNC GR5 PL
29	4	250504	NUT, LOCK - 1/2 UNC - STOVER - PL
30	14	250555	WASHER, FLAT - 1/2 IN - GR8 - PL
31	13	250450	NUT, HEX 1/2 UNC GR5 PL
32	8	250232	BOLT, U-SQ - 3/4 UNC X 12 ID X 10 IN - 2 IN THD - GR8 PL
33	18	250552	WASHER, FLAT 3/4IN GR8 PL
34	18	250451	NUT, HEX 3/4 UNC GR5 PL
35	7	250001	BOLT, HEX 1/2 X 1 1/2 IN GR5 PL
36	1	250048	BOLT, HEX 1/2 X 2 IN GR5 PL
37	4	250019	BOLT, HEX 3/8 X 1 1/4 IN GR5 PL
38	19	250557	WASHER, FLAT - 3/8 IN GR8 PL
39	10	250453	NUT, HEX - 3/8 UNC PL
40	1	250013	BOLT, HEX 1/2 X 1 1/4 IN GR5 PL
41	1	250039	BOLT, HEX 3/8 X 2 IN GR5 PL
42	1	250503	NUT, LOCK - 3/8 UNC - STOVER - PL
43	2	250234	BOLT, U-SQ - 1/2 UNC X 12 ID X 8 IN - 2 IN THD - GR5 PL
44	2	250047	BOLT, HEX 5/8 X 2 UNC GR5 PL
45	2	250550	WASHER, FLAT 5/8 IN GR8 PL
46	2	250455	NUT, HEX 5/8 UNC GR5 PL
47	4	250093	BOLT, HEX 3/8 X 1 3/4 IN GR5 PL
48	2	250628	BUSH, SLEEVE - PLASTIC - 3ID X 3 3/16OD X 2 IN
49	1	250621	PIN, COILED SPRING - 1/4 X 3 1/2 IN - PL
50	2	250633	SCREW, MACHINE 10-32 X 1 IN - PLATED
51	2	250634	NUT, MACHINE 10-32 - PLATED
52	1	503960	ASSY, LOCK CLAMP - CONVEYOR LATCH
53	1	258551	CYL, HYD 2 X 4 IN - FILL AUGER
54	1	258551	CYL, HYD 2 X 4 IN - FILL AUGER
55	2	250689	BUSH, 1 IN O.D. 3/4 IN I.D. - IGUS - JSI-1216-16
56	1	503970-1	ASSY, MAIN LATCH CLAMP - CONVEYOR - BLK
57	1	503980-1	ASSY, MAIN LATCH HOOK - LONG CONVEYOR - YEL
58	1	259853	BUMPER, 3/4 IN UHMW - BOTTOM - CONVEYOR
59	1	259854	BUMPER, 3/4 IN UHMW - SIDE - CONVEYOR
60	1	501224	PLATE, FRMD 1/4 IN - BUMPER GUIDE - CONVEYOR - BLK
61	1	250101	BOLT, CARRIAGE - 3/8 X 1 1/4 IN UNC GR5 PL
62	1	258509	VALVE, CONVEYOR BELT ON/OFF CONTROL
63	1	501238	PLATE, BOLT 1/4 IN - ROAD TRANSPORT MNT - BLK
64	1	501239	PLATE, FRMD 1/4 IN - ROAD TRANSPORT LOCK - BLK
65	2	250036	BOLT, HEX 3/8 X 1 IN GR5 PL
66	4	250558	WASHER, FLAT - 5/16 IN - GR8 PL
67	2	250460	NUT, HEX - 5/16 UNC PL
68	2	250004	BOLT, HEX 3/4 X 2 3/4 UNC GR5 PL
69	1	280010	KAR-TECH REMOTE SYSTEM, 10 BUTTON
70	1	503964	UHMW, STOPPER PAD

Long Conveyor - 780/820 Nova
Part Number: 503900-3

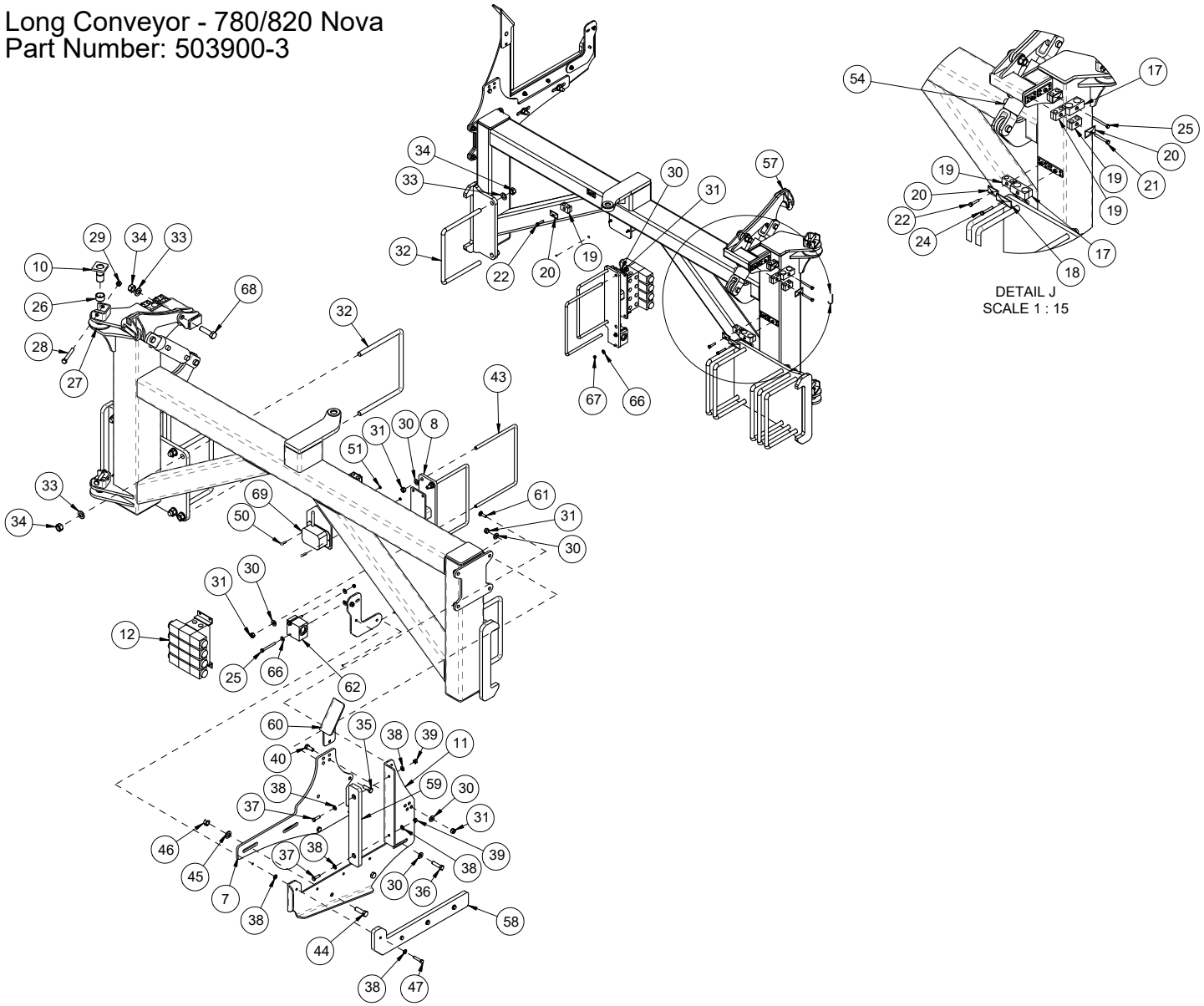

Long Conveyor Latch - 780-820 Nova

Item	Qty.	Part No.	Description	Item	Qty.	Part No.	Description
1	1	503940	ASSY, MOUNT POST - CONVEYOR LATCH - BLK				
2	2	250232	BOLT, U-SQ - 3/4 UNC X 12 ID X 10 IN - 2 IN THD - GR8 PL				
3	5	250552	WASHER, FLAT 3/4IN GR8 PL				
4	5	250451	NUT, HEX 3/4 UNC GR5 PL				
5	1	503960	ASSY, LOCK CLAMP - CONVEYOR LATCH				
6	1	258551	CYL, HYD 2 X 4 IN - FILL AUGER				
7	1	250689	BUSH, 1 IN O.D. 3/4 IN I.D. - IGUS - JSI-1216-16				
8	1	250004	BOLT, HEX 3/4 X 2 3/4 UNC GR5 PL				
9	2	250557	WASHER, FLAT - 3/8 IN GR8 PL				
10	2	250453	NUT, HEX - 3/8 UNC PL				
11	1	503964	UHMW, STOPPER PAD				
12	2	250019	BOLT, HEX 3/8 X 1 1/4 IN GR5 PL				

Long Conveyor Latch - 780/820 Nova
Part Number: 503900-3

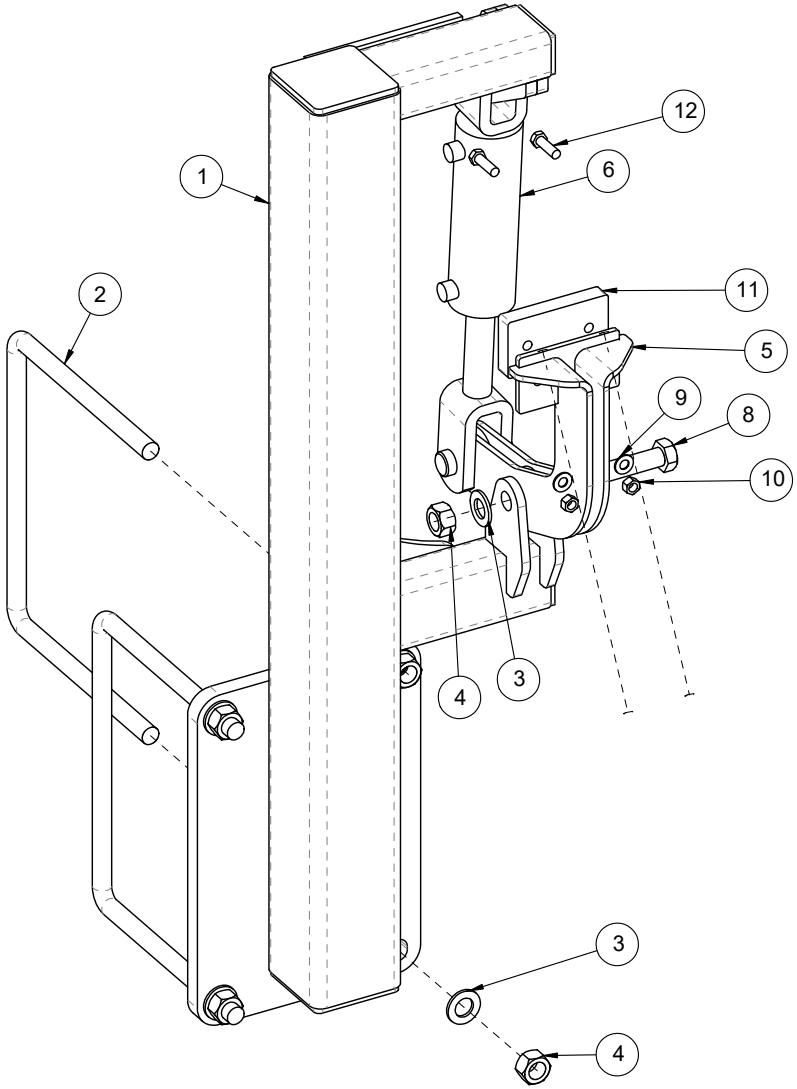

Short Conveyor 520/560/630 Nova

Item	Qty.	Part No.	Description
1	1	259810	CONVEYOR, CONVEYALL - TCP1625 - BLK
2	1	501710-1	ASSY, MAIN MOUNT - SHORT CONVEYOR - SMART FILL - BLK
3	1	502925-1	ASSY, MAIN ARM - SHORT CONVEYOR MNT - SMART FILL - BLK
4	1	502930	ASSY, SECOND ARM - SHORT CONVEYOR MNT - NOVA - BLK
5	1	502935	ASSY, PIVOT MOUNT - SHORT CONVEYOR - BLK
6	1	502940	ASSY, MOUNT POST - SHORT CONVEYOR LATCH - SMART FILL - BLK
7	1	501361-1	PLATE, 3/8 IN - BTM BUMPER MNT - CONVEYOR - BLK
8	1	501215-2	ASSY, CONVEYOR TILT PIN
9	4	503967	ASSY, PIVOT PIN - GREASED
10	1	501114-6	PLATE, FRMD 1/4 IN - BTM BUMPER HOLDER - CONVEYOR - BLK
11	1	258506	MANIFOLD, HYD - 4 VALVE D03 - CONVEYOR CONTROL
12	1	259854	BUMPER, 3/4 IN UHMW - SIDE - CONVEYOR
13	1	259853	BUMPER, 3/4 IN UHMW - BOTTOM - CONVEYOR
14	1	501178	PAD, WEAR 1/4 IN - UHMW - CONVEYOR PIVOT
15	2	258510	CYL, HYD 3 X 24 IN - WING LIFT
16	1	258550	CYL, HYD 2 1/2 X 8 IN
17	5	258394	HOSE CLAMP - 2 HALVES - 3/4" HOSE - 428,5 / 28,5 PAH
18	3	258396	HOSE CLAMP - COVER PLATE - GD4DW3
19	11	258398	HOSE CLAMP - 2 HALVES - 1/4" HOSE
20	9	258399	HOSE CLAMP - COVER PLATE - 2D
21	3	250073	BOLT, HEX 5/16 X 2 UNC GR5 PL
22	5	250099	BOLT, HEX 5/16 X 1 3/4 UNC GR5 PL
23	2	250084	BOLT, HEX 5/16 X 2 1/2 UNC GR5 PL
24	2	250128	BOLT, HEX 5/16 X 3 IN UNC GR5 PL
25	5	501225-1	PLATE, FRMD 12 GA - 3/4 IN HYD HOSE CLAMP
26	10	250658	SCREW, TEK - 1/4 X 1 IN
27	4	250601	BUSH, 1 1/2OD X 1 1/4ID X 7/8 IN - CONNEX
28	2	400234-1	WASHER, TRIP 1/4 IN - UHMW
29	1	250503	NUT, LOCK - 3/8 UNC - STOVER - PL
30	4	250152	BOLT, HEX 1/2 X 3 3/4 IN UNC GR5 PL
31	4	250504	NUT, LOCK - 1/2 UNC - STOVER - PL
32	1	250039	BOLT, HEX 3/8 X 2 IN GR5 PL
33	21	250557	WASHER, FLAT - 3/8 IN GR8 PL
34	7	250232	BOLT, U-SQ - 3/4 UNC X 12 ID X 10 IN - 2 IN THD - GR8 PL
35	18	250451	NUT, HEX 3/4 UNC GR5 PL
36	18	250552	WASHER, FLAT 3/4IN GR8 PL
37	4	250093	BOLT, HEX 3/8 X 1 3/4 IN GR5 PL
38	12	250453	NUT, HEX - 3/8 UNC PL
39	2	250047	BOLT, HEX 5/8 X 2 UNC GR5 PL
40	2	250550	WASHER, FLAT 5/8 IN GR8 PL
41	2	250455	NUT, HEX 5/8 UNC GR5 PL
42	16	250555	WASHER, FLAT - 1/2 IN - GR8 - PL
43	15	250450	NUT, HEX 1/2 UNC GR5 PL
44	11	250001	BOLT, HEX 1/2 X 1 1/2 IN GR5 PL
45	1	250048	BOLT, HEX 1/2 X 2 IN GR5 PL
46	1	250013	BOLT, HEX 1/2 X 1 1/4 IN GR5 PL
47	4	250019	BOLT, HEX 3/8 X 1 1/4 IN GR5 PL
48	4	250038	BOLT, HEX 5/16 X 1 1/4 IN GR5 PL
49	4	250460	NUT, HEX - 5/16 UNC PL
50	4	250558	WASHER, FLAT - 5/16 IN - GR8 PL
51	1	250621	PIN, COILED SPRING - 1/4 X 3 1/2 IN - PL
52	2	250628	BUSH, SLEEVE - PLASTIC - 3ID X 3 3/16OD X 2 IN
53	1	501239	PLATE, FRMD 1/4 IN - ROAD TRANSPORT LOCK - BLK
54	1	501238	PLATE, BOLT 1/4 IN - ROAD TRANSPORT MNT - BLK
55	2	250036	BOLT, HEX 3/8 X 1 IN GR5 PL
56	1	501224	PLATE, FRMD 1/4 IN - BUMPER GUIDE - CONVEYOR - BLK
57	2	250101	BOLT, CARRIAGE - 3/8 X 1 1/4 IN UNC GR5 PL
58	1	502950	ASSY, MAIN LATCH CLAMP - CONVEYOR - SMART FILL - BLK
59	1	502960	ASSY, MAIN LATCH HOOK - SHORT CONVEYOR - SMART FILL - YEL
60	2	258551	CYL, HYD 2 X 4 IN - FILL AUGER
61	1	503960	ASSY, LOCK CLAMP - CONVEYOR LATCH
62	2	250003	BOLT, HEX 3/4 X 2 1/2 UNC GR5 PL
63	2	250004	BOLT, HEX 3/4 X 2 3/4 UNC GR5 PL
64	1	502962	PLATE, 3/8 IN VALVE MOUNT - BLK
65	1	250208	BOLT, U-SQ - 1/2 UNC X 4 ID X 5 IN - 2 IN THD - GR8 PL
66	1	502596	ASSY, BOLT CONNECTION - SHORT CONVEYOR - SMART FILL - BLK
67	1	280010	KAR-TECH REMOTE SYSTEM, 10 BUTTON
68	2	250633	SCREW, MACHINE 10-32 X 1 IN - PLATED
69	2	250634	NUT, MACHINE 10-32 - PLATED

Short Conveyor - 520/560/630 Nova
Part Number: 502900-3

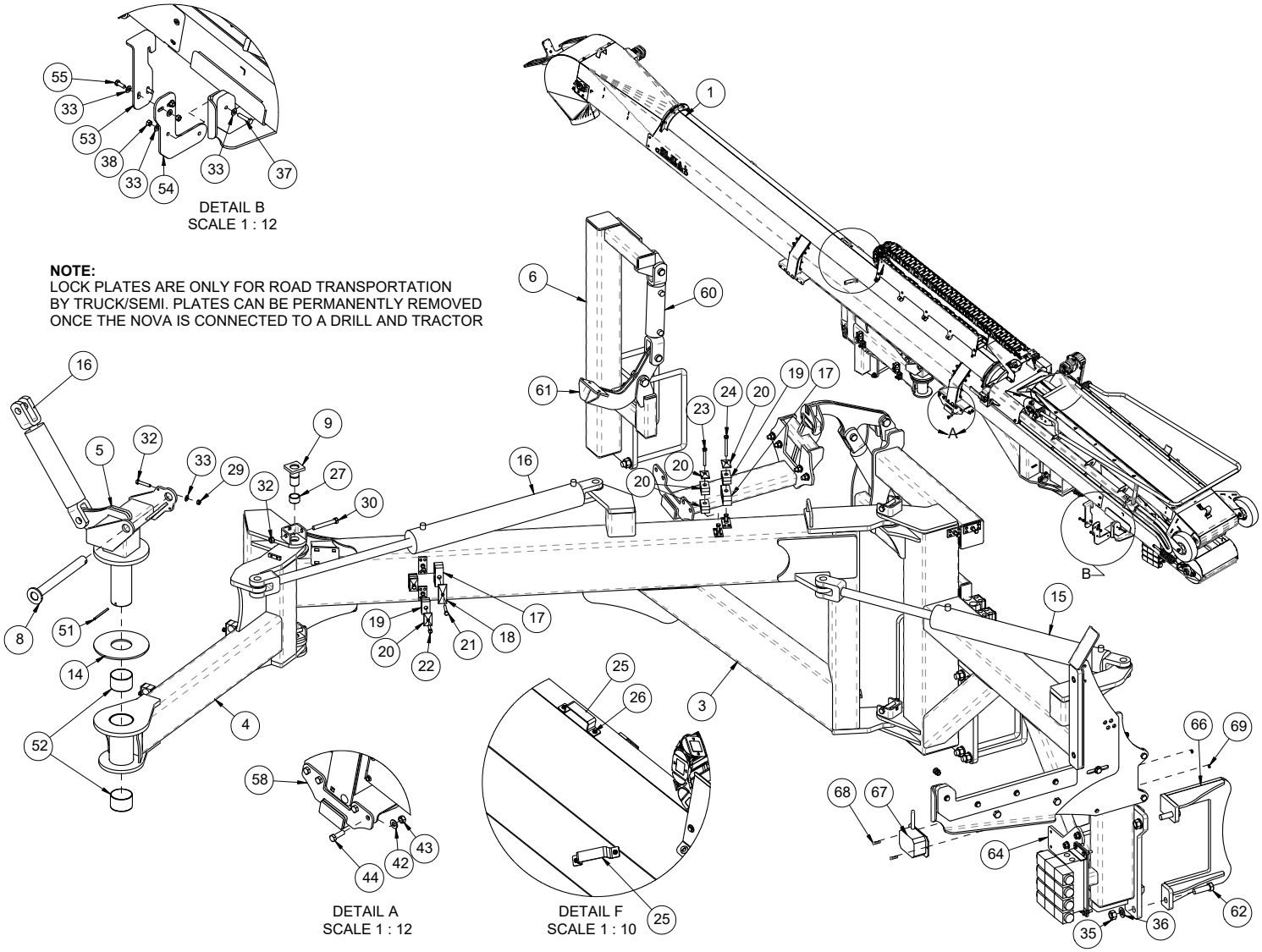

Short Conveyor 520/560/630 Nova

Item	Qty.	Part No.	Description
1	1	259810	CONVEYOR, CONVEYALL - TCP1625 - BLK
2	1	501710-1	ASSY, MAIN MOUNT - SHORT CONVEYOR - SMART FILL - BLK
3	1	502925-1	ASSY, MAIN ARM - SHORT CONVEYOR MNT - SMART FILL - BLK
4	1	502930	ASSY, SECOND ARM - SHORT CONVEYOR MNT - NOVA - BLK
5	1	502935	ASSY, PIVOT MOUNT - SHORT CONVEYOR - BLK
6	1	502940	ASSY, MOUNT POST - SHORT CONVEYOR LATCH - SMART FILL - BLK
7	1	501361-1	PLATE, 3/8 IN - BTM BUMPER MNT - CONVEYOR - BLK
8	1	501215-2	ASSY, CONVEYOR TILT PIN
9	4	503967	ASSY, PIVOT PIN - GREASED
10	1	501114-6	PLATE, FRMD 1/4 IN - BTM BUMPER HOLDER - CONVEYOR - BLK
11	1	258506	MANIFOLD, HYD - 4 VALVE D03 - CONVEYOR CONTROL
12	1	259854	BUMPER, 3/4 IN UHMW - SIDE - CONVEYOR
13	1	259853	BUMPER, 3/4 IN UHMW - BOTTOM - CONVEYOR
14	1	501178	PAD, WEAR 1/4 IN - UHMW - CONVEYOR PIVOT
15	2	258510	CYL, HYD 3 X 24 IN - WING LIFT
16	1	258550	CYL, HYD 2 1/2 X 8 IN
17	5	258394	HOSE CLAMP - 2 HALVES - 3/4" HOSE - 428,5 / 28,5 PAH
18	3	258396	HOSE CLAMP - COVER PLATE - GD4DW3
19	11	258398	HOSE CLAMP - 2 HALVES - 1/4" HOSE
20	9	258399	HOSE CLAMP - COVER PLATE - 2D
21	3	250073	BOLT, HEX 5/16 X 2 UNC GR5 PL
22	5	250099	BOLT, HEX 5/16 X 1 3/4 UNC GR5 PL
23	2	250084	BOLT, HEX 5/16 X 2 1/2 UNC GR5 PL
24	2	250128	BOLT, HEX 5/16 X 3 IN UNC GR5 PL
25	5	501225-1	PLATE, FRMD 12 GA - 3/4 IN HYD HOSE CLAMP
26	10	250658	SCREW, TEK - 1/4 X 1 IN
27	4	250601	BUSH, 1 1/2OD X 1 1/4ID X 7/8 IN - CONNEX
28	2	400234-1	WASHER, TRIP 1/4 IN - UHMW
29	1	250503	NUT, LOCK - 3/8 UNC - STOVER - PL
30	4	250152	BOLT, HEX 1/2 X 3 3/4 IN UNC GR5 PL
31	4	250504	NUT, LOCK - 1/2 UNC - STOVER - PL
32	1	250039	BOLT, HEX 3/8 X 2 IN GR5 PL
33	21	250557	WASHER, FLAT - 3/8 IN GR8 PL
34	7	250232	BOLT, U-SQ - 3/4 UNC X 12 ID X 10 IN - 2 IN THD - GR8 PL
35	18	250451	NUT, HEX 3/4 UNC GR5 PL
36	18	250552	WASHER, FLAT 3/4IN GR8 PL
37	4	250093	BOLT, HEX 3/8 X 1 3/4 IN GR5 PL
38	12	250453	NUT, HEX - 3/8 UNC PL
39	2	250047	BOLT, HEX 5/8 X 2 UNC GR5 PL
40	2	250550	WASHER, FLAT 5/8 IN GR8 PL
41	2	250455	NUT, HEX 5/8 UNC GR5 PL
42	16	250555	WASHER, FLAT - 1/2 IN - GR8 - PL
43	15	250450	NUT, HEX 1/2 UNC GR5 PL
44	11	250001	BOLT, HEX 1/2 X 1 1/2 IN GR5 PL
45	1	250048	BOLT, HEX 1/2 X 2 IN GR5 PL
46	1	250013	BOLT, HEX 1/2 X 1 1/4 IN GR5 PL
47	4	250019	BOLT, HEX 3/8 X 1 1/4 IN GR5 PL
48	4	250038	BOLT, HEX 5/16 X 1 1/4 IN GR5 PL
49	4	250460	NUT, HEX - 5/16 UNC PL
50	4	250558	WASHER, FLAT - 5/16 IN - GR8 PL
51	1	250621	PIN, COILED SPRING - 1/4 X 3 1/2 IN - PL
52	2	250628	BUSH, SLEEVE - PLASTIC - 3ID X 3 3/16OD X 2 IN
53	1	501239	PLATE, FRMD 1/4 IN - ROAD TRANSPORT LOCK - BLK
54	1	501238	PLATE, BOLT 1/4 IN - ROAD TRANSPORT MNT - BLK
55	2	250036	BOLT, HEX 3/8 X 1 IN GR5 PL
56	1	501224	PLATE, FRMD 1/4 IN - BUMPER GUIDE - CONVEYOR - BLK
57	2	250101	BOLT, CARRIAGE - 3/8 X 1 1/4 IN UNC GR5 PL
58	1	502950	ASSY, MAIN LATCH CLAMP - CONVEYOR - SMART FILL - BLK
59	1	502960	ASSY, MAIN LATCH HOOK - SHORT CONVEYOR - SMART FILL - YEL
60	2	258551	CYL, HYD 2 X 4 IN - FILL AUGER
61	1	503960	ASSY, LOCK CLAMP - CONVEYOR LATCH
62	2	250003	BOLT, HEX 3/4 X 2 1/2 UNC GR5 PL
63	2	250004	BOLT, HEX 3/4 X 2 3/4 UNC GR5 PL
64	1	502962	PLATE, 3/8 IN VALVE MOUNT - BLK
65	1	250208	BOLT, U-SQ - 1/2 UNC X 4 ID X 5 IN - 2 IN THD - GR8 PL
66	1	502596	ASSY, BOLT CONNECTION - SHORT CONVEYOR - SMART FILL - BLK
67	1	280010	KAR-TECH REMOTE SYSTEM, 10 BUTTON
68	2	250633	SCREW, MACHINE 10-32 X 1 IN - PLATED
69	2	250634	NUT, MACHINE 10-32 - PLATED

Short Conveyor - 520/560/630 Nova
Part Number: 502900-3

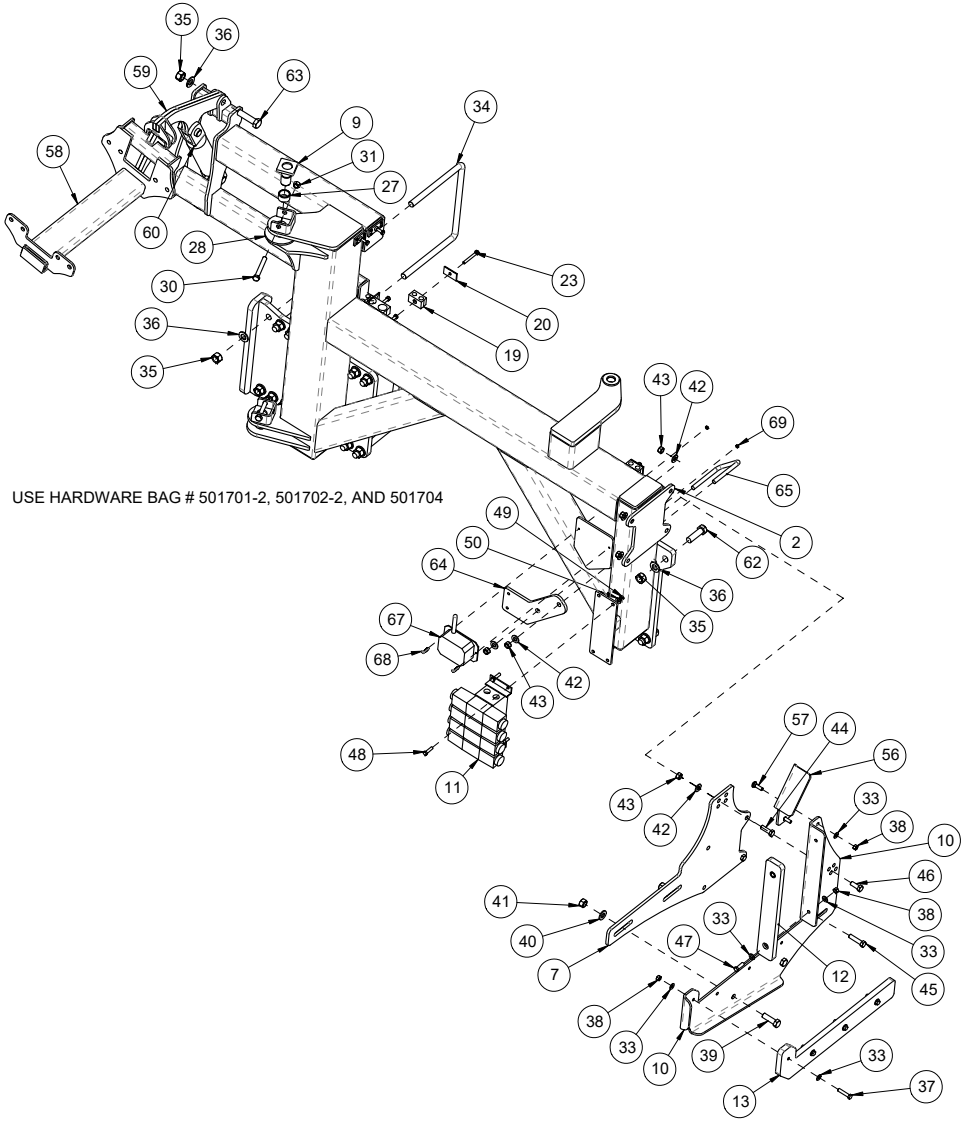

Short Conveyor Latch 520/560/630 Nova

Item	Qty.	Part No.	Description	Item	Qty.	Part No.	Description
1	1	502940	ASSY, MOUNT POST - SHORT CONVEYOR LATCH - SMART FILL - BLK				
2	2	250232	BOLT, U-SQ - 3/4 UNC X 12 ID X 10 IN - 2 IN THD - GR8 PL				
3	5	250451	NUT, HEX 3/4 UNC GR5 PL				
4	5	250552	WASHER, FLAT 3/4IN GR8 PL				
5	1	503960	ASSY, LOCK CLAMP - CONVEYOR LATCH				
6	1	258551	CYL, HYD 2 X 4 IN - FILL AUGER				
7	1	250004	BOLT, HEX 3/4 X 2 3/4 UNC GR5 PL				
8	2	250557	WASHER, FLAT - 3/8 IN GR8 PL				
9	2	250453	NUT, HEX - 3/8 UNC PL				
10	2	250019	BOLT, HEX 3/8 X 1 1/4 IN GR5 PL				
11	1	503964	UHMW, STOPPER PAD				

Short Conveyor Latch - 520/560/630 Nova
Part Number: 502900-3

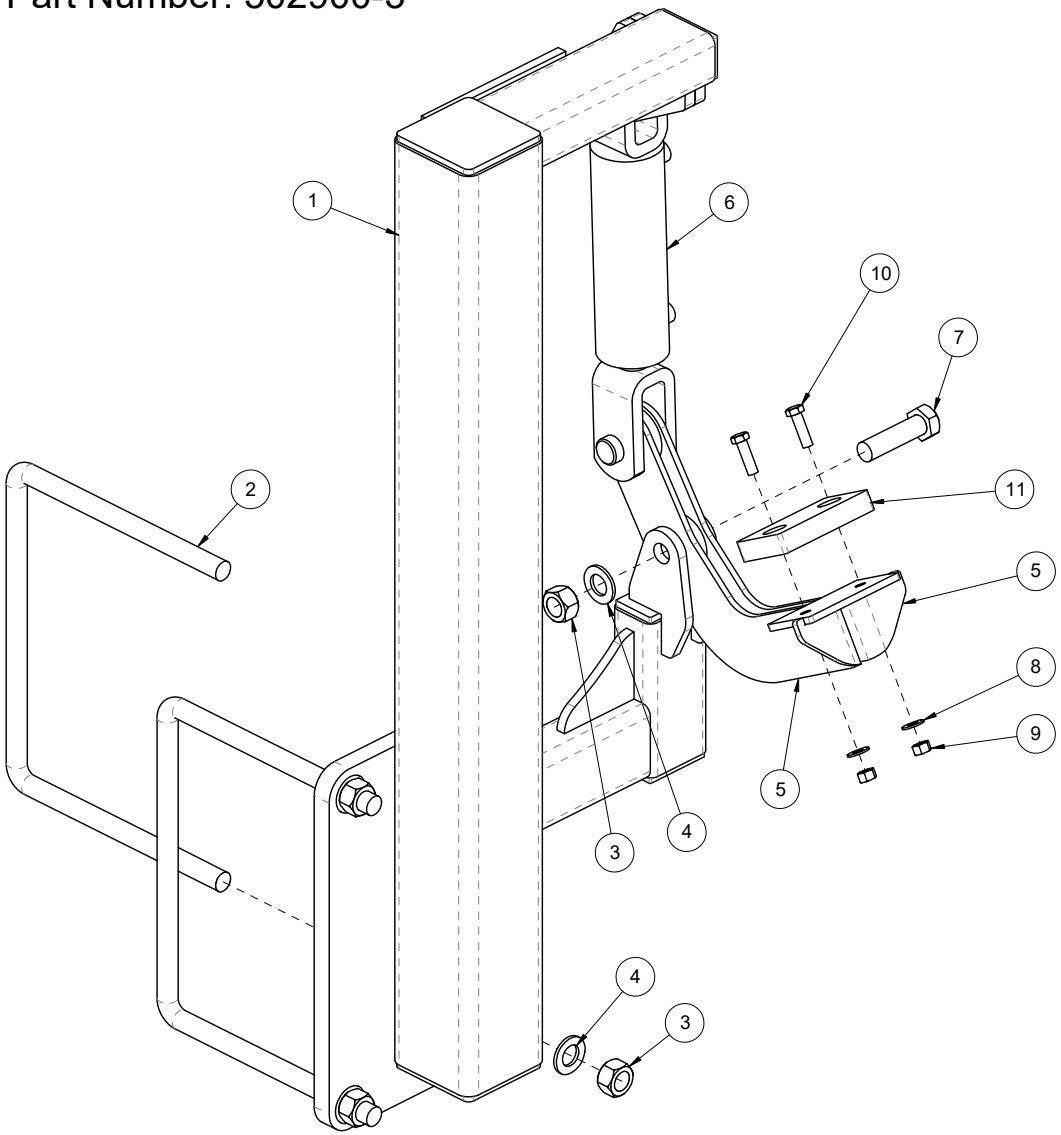

Liquid Nova Pump/Valves

Item	Qty.	Part No.	Description	Item	Qty.	Part No.	Description
1	1	501865	ASSY, FILL PUMP/VALVE MOUNT-LIQUID NOVA TANK-BLK				
2	1	501821	SHEET, FRMD 14 GA - FILL PUMP SHIELD - NOVA				
3	1	256226	PUMP, CENTRIFUGAL - HYPRO - 9303S-HM4C				
4	2	260042	BANJO, 3" FLANGED TEE				
5	1	260043	BANJO, 3" FLANGE X 3" MALE ADAPTER - BALL VALVE				
6	4	260030	BANJO, 2" X 2" FP FLANGE BALL VALVE				
7	1	260033	BANJO, 2" FP FLANGED "Y" STRAINER-50 MESH				
8	2	260026	BANJO, 2"FULL PT.FLANGE X 2"HB90 ELBOW				
9	3	260044	BANJO, 3" X 2" FP REDUCER FLANGE				
10	2	260046	BANJO, 3" FP FLANGE X 3" MPT				
11	1	260200	BANJO, 3IN FILL PUMP - 6 HP HONDA				
12	2	260028	BANJO, 2" FP FLANG X 2" HB				
13	1	260038	BANJO, 2" FP FLANGE 90D ELBOW				
14	1	260031	BANJO, 2" FP FLANGE TEE				
15	1	260762	VALVE, PWM - 10 GPM - RAVEN - HIGH FLOW				
16	1	260034	BANJO, 2" STD PT FLANGE X 1 1/2" MALE THREAD				
17	1	260023	BANJO, 2" STD PT FLANGE X 1 1/4" MALE THREAD				
18	1	260000	BANJO, 2" STD PT FLANGE X 1-1/2" HB90 ELBOW				
19	1	260050	BANJO, 2" STD FLANGE COUPLING - M200CPG				
20	1	260035	BANJO, 2"STD.PT.FLANGE X 2"HB90 ELBOW				
21	1	501862	PLATE, CLAMP - 1/4 IN - LIQUID PLUMBING - BLK				
22	1	260045	BANJO, 3" CAP				
23	2	250071	BOLT, HEX 3/8 X 1 1/2 IN GR5 PL				
24	8	250557	WASHER, FLAT - 3/8 IN GR8 PL				
25	8	250453	NUT, HEX - 3/8 UNC PL				
26	2	250571	BOLT, HEX 1/4 X 2 1/2 IN GR5 PL				
27	5	250559	WASHER, FLAT - 1/4 IN PL				
28	5	250458	NUT, HEX - 1/4 UNC PL				
29	3	250573	BOLT, HEX - 1/4 X 4 1/2 UNC - GR5 - PL				
30	2	250234	BOLT, U-SQ - 1/2 UNC X 12 ID X 8 IN - 2 IN THD - GR5 PL				
31	4	250555	WASHER, FLAT - 1/2 IN - GR8 - PL				
32	4	250450	NUT, HEX 1/2 UNC GR5 PL				
33	4	250040	BOLT, HEX 3/8 X 2IN GR5 PL				
34	2	250036	BOLT, HEX 3/8 X 1 IN GR5 PL				

Liquid Nova Pump/Valves

Part Number: 501860

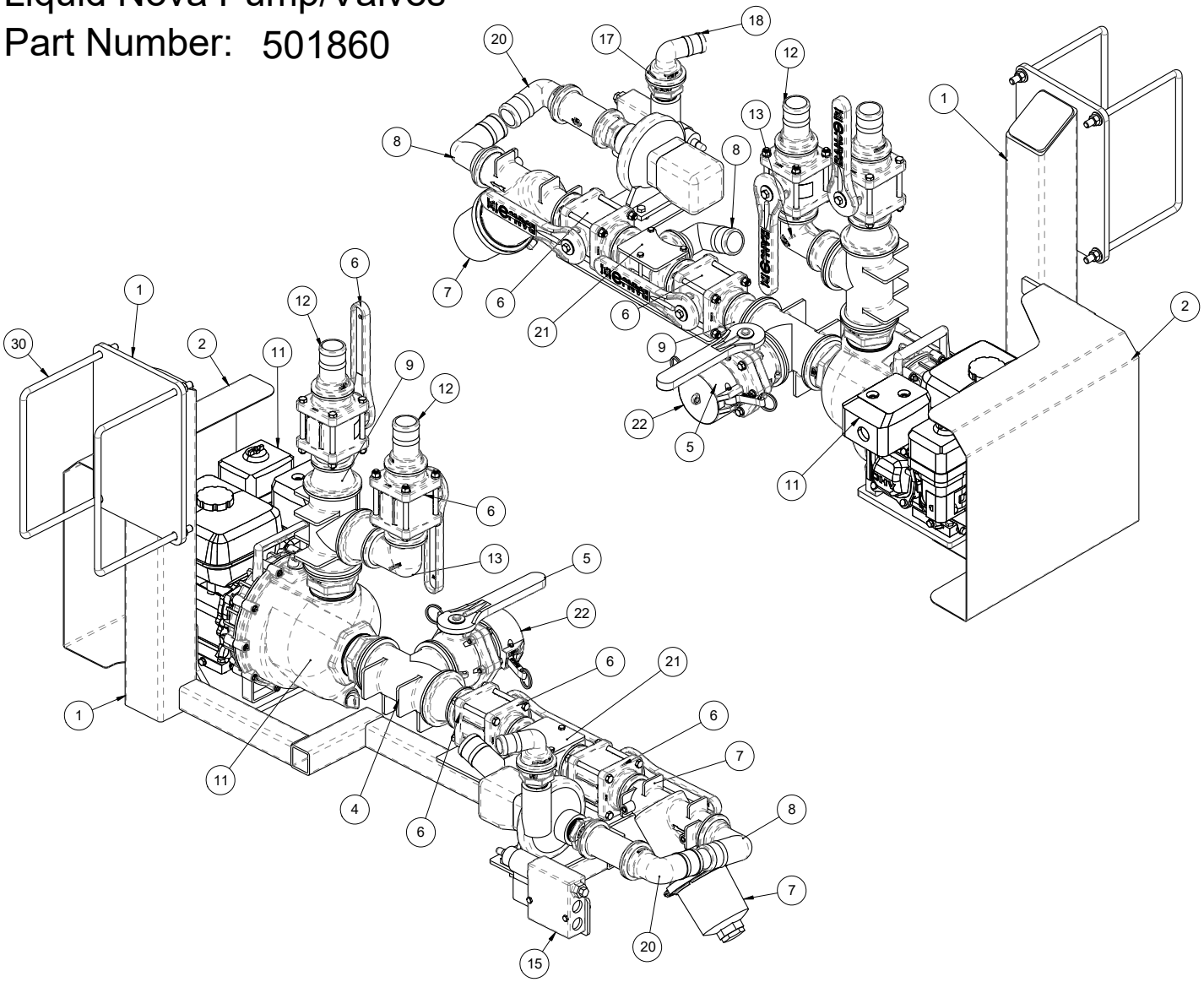

Liquid Nova Pump/Valves

Item	Qty.	Part No.	Description	Item	Qty.	Part No.	Description
1	1	501865	ASSY, FILL PUMP/VALVE MOUNT-LIQUID NOVA TANK-BLK				
2	1	501821	SHEET, FRMD 14 GA - FILL PUMP SHIELD - NOVA				
3	1	256226	PUMP, CENTRIFUGAL - HYPRO - 9303S-HM4C				
4	2	260042	BANJO, 3" FLANGED TEE				
5	1	260043	BANJO, 3" FLANGE X 3" MALE ADAPTER - BALL VALVE				
6	4	260030	BANJO, 2" X 2" FP FLANGE BALL VALVE				
7	1	260033	BANJO, 2" FP FLANGED "Y" STRAINER-50 MESH				
8	2	260026	BANJO, 2"FULL PT.FLANGE X 2"HB90 ELBOW				
9	3	260044	BANJO, 3" X 2" FP REDUCER FLANGE				
10	2	260046	BANJO, 3" FP FLANGE X 3" MPT				
11	1	260200	BANJO, 3IN FILL PUMP - 6 HP HONDA				
12	2	260028	BANJO, 2" FP FLANG X 2" HB				
13	1	260038	BANJO, 2" FP FLANGE 90D ELBOW				
14	1	260031	BANJO, 2" FP FLANGE TEE				
15	1	260762	VALVE, PWM - 10 GPM - RAVEN - HIGH FLOW				
16	1	260034	BANJO, 2" STD PT FLANGE X 1 1/2" MALE THREAD				
17	1	260023	BANJO, 2" STD PT FLANGE X 1 1/4" MALE THREAD				
18	1	260000	BANJO, 2" STD PT FLANGE X 1-1/2" HB90 ELBOW				
19	1	260050	BANJO, 2" STD FLANGE COUPLING - M200CPG				
20	1	260035	BANJO, 2"STD.PT.FLANGE X 2"HB90 ELBOW				
21	1	501862	PLATE, CLAMP - 1/4 IN - LIQUID PLUMBING - BLK				
22	1	260045	BANJO, 3" CAP				
23	2	250071	BOLT, HEX 3/8 X 1 1/2 IN GR5 PL				
24	8	250557	WASHER, FLAT - 3/8 IN GR8 PL				
25	8	250453	NUT, HEX - 3/8 UNC PL				
26	2	250571	BOLT, HEX 1/4 X 2 1/2 IN GR5 PL				
27	5	250559	WASHER, FLAT - 1/4 IN PL				
28	5	250458	NUT, HEX - 1/4 UNC PL				
29	3	250573	BOLT, HEX - 1/4 X 4 1/2 UNC - GR5 - PL				
30	2	250234	BOLT, U-SQ - 1/2 UNC X 12 ID X 8 IN - 2 IN THD - GR5 PL				
31	4	250555	WASHER, FLAT - 1/2 IN - GR8 - PL				
32	4	250450	NUT, HEX 1/2 UNC GR5 PL				
33	4	250040	BOLT, HEX 3/8 X 2IN GR5 PL				
34	2	250036	BOLT, HEX 3/8 X 1 IN GR5 PL				

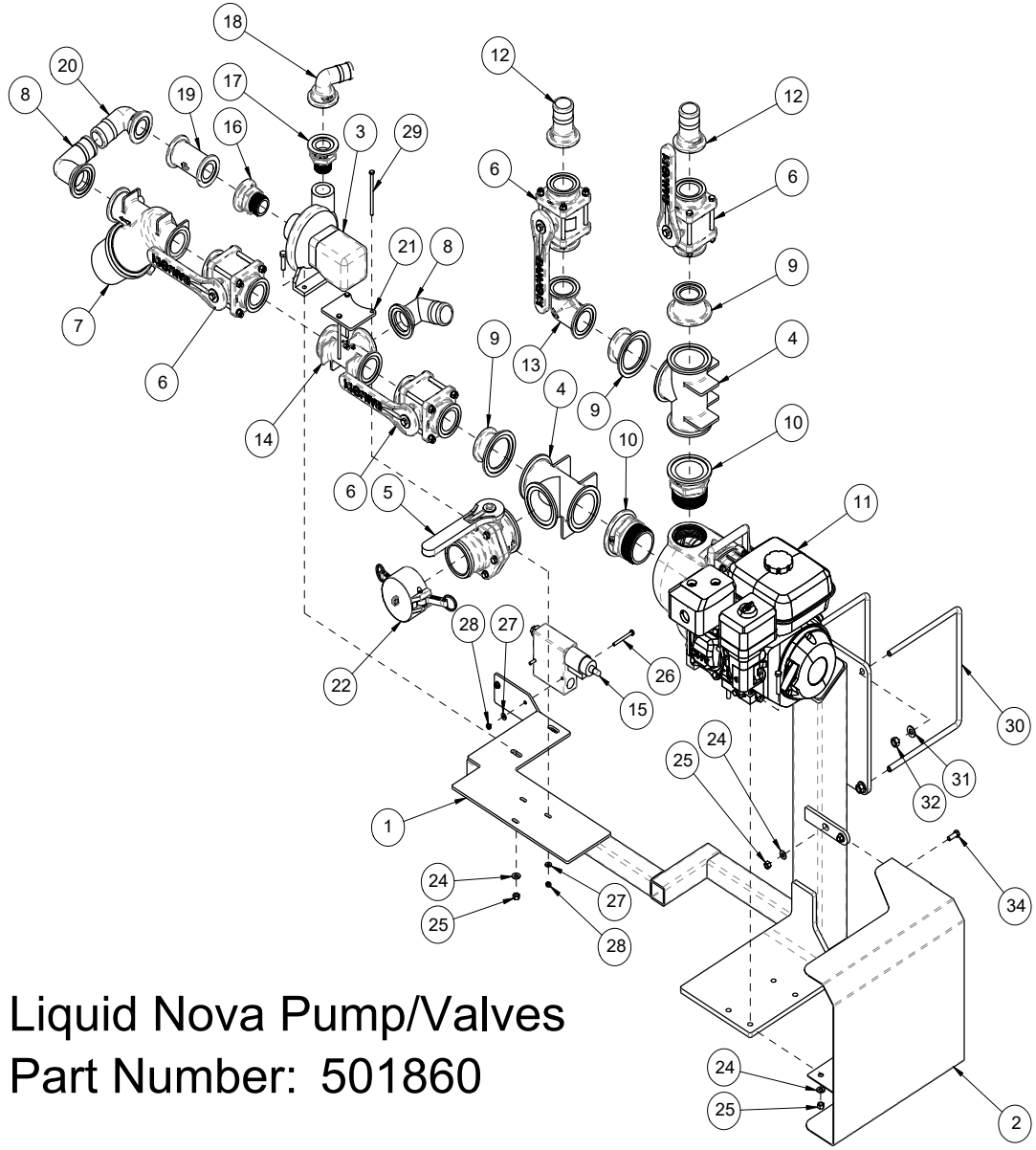

Liquid Nova Pump/Valves
Part Number: 501860

Liquid Fertilizer Plumbing Schematic

Item	Qty.	Part No.	Description	Item	Qty.	Part No.	Description
1	24	256506	HOSE - 1 1/4 IN - SPIRAL BRAIDED				
2	48	256507	HOSE - 1 1/4 IN - SPIRAL BRAIDED				
3	3	260026	BANJO, 2"FULL PT.FLANGE X 2"HB90 ELBOW				
4	3	260021	BANJO, 2"FP FLANGE BOLTED BOT. TANK FITTING				
5	1	260030	BANJO, 2" X 2" FP FLANGE BALL VALVE				
6	1	260025	BANJO, 1 1/2" MALE ADAPTOR X 11/2" HB				

Liquid Fertilizer Plumbing Schematic
Part Number: 501850-1

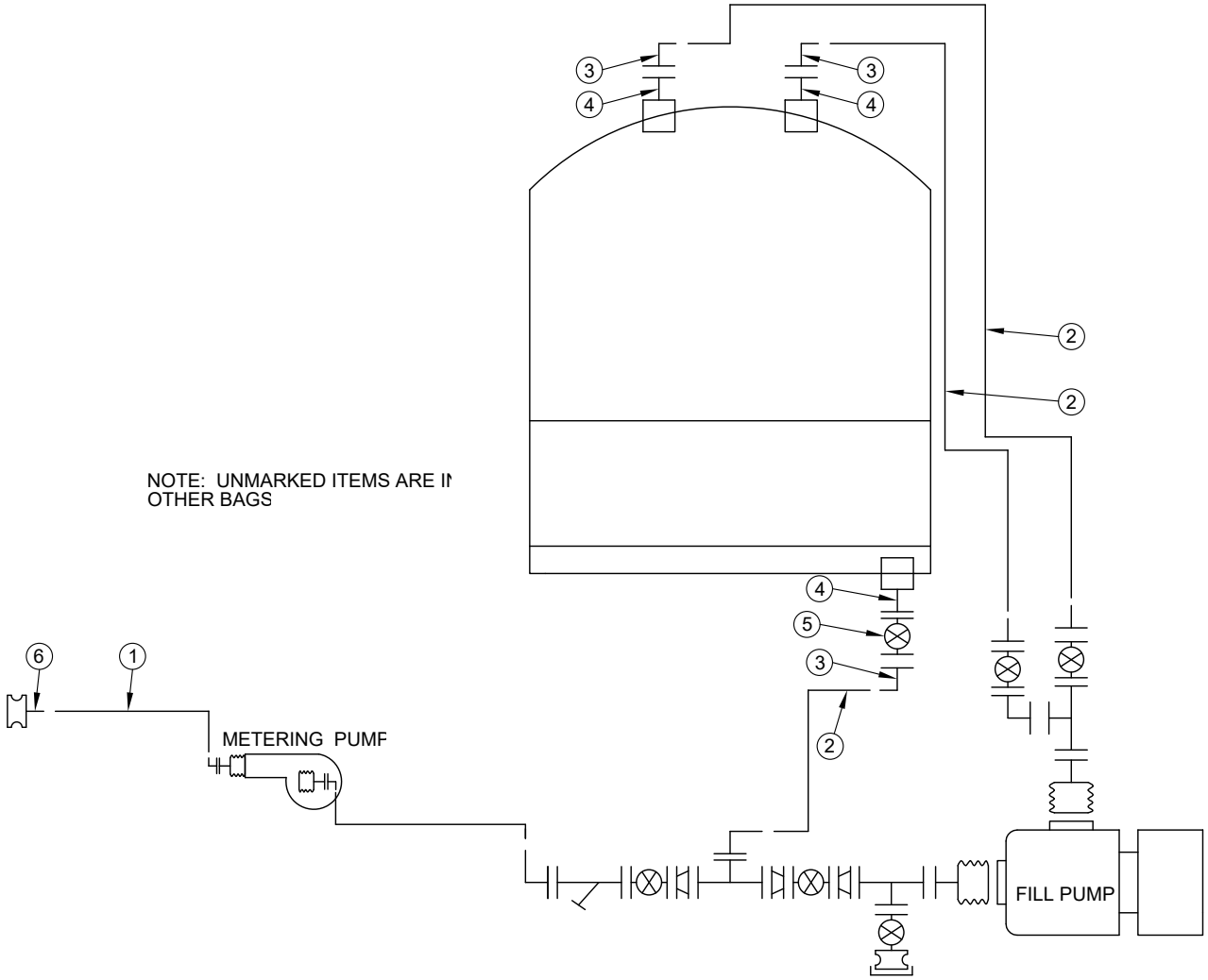

Top Up Air Schematic - 520 Nova Dual Shoot

Item	Qty.	Part No.	Description	Item	Qty.	Part No.	Description
1	2	260123	BANJO, COUPLER - CAP - 1 1/2"				
2	2	260122	BANJO, COUPLER - 90D - FEMALE ADAPTER - 1 1/2" HB				
3	4	260121	BANJO, COUPLER - MALE ADAPTER - 1 1/2" MPT				
4	2	260120	BANJO, NIPPLE - 1 1/2 MPT - SHORT				
5	2	260119	BANJO, TEE - 1 1/2 FPT X 1 1/2 FPT X 1 1/2 FPT				
6	2	260118	BANJO, BULKHEAD - 1 1/2" - POLY				
7	4	260104	BANJO, 1 1/2" MALE THD. X 1 1/2" HB 90				
8	2	260101	BANJO, 1 1/2" POLY PIPE ELBOW 90				
9	50	256506	HOSE - 1 1/4 IN - SPIRAL BRAIDED				
10	8	256614	CLAMP, GEAR - S/S - 1 1/4 IN - HAS20				

Top Up Air Schematic - 520 Nova Dual Shoot
Part Number: 500946

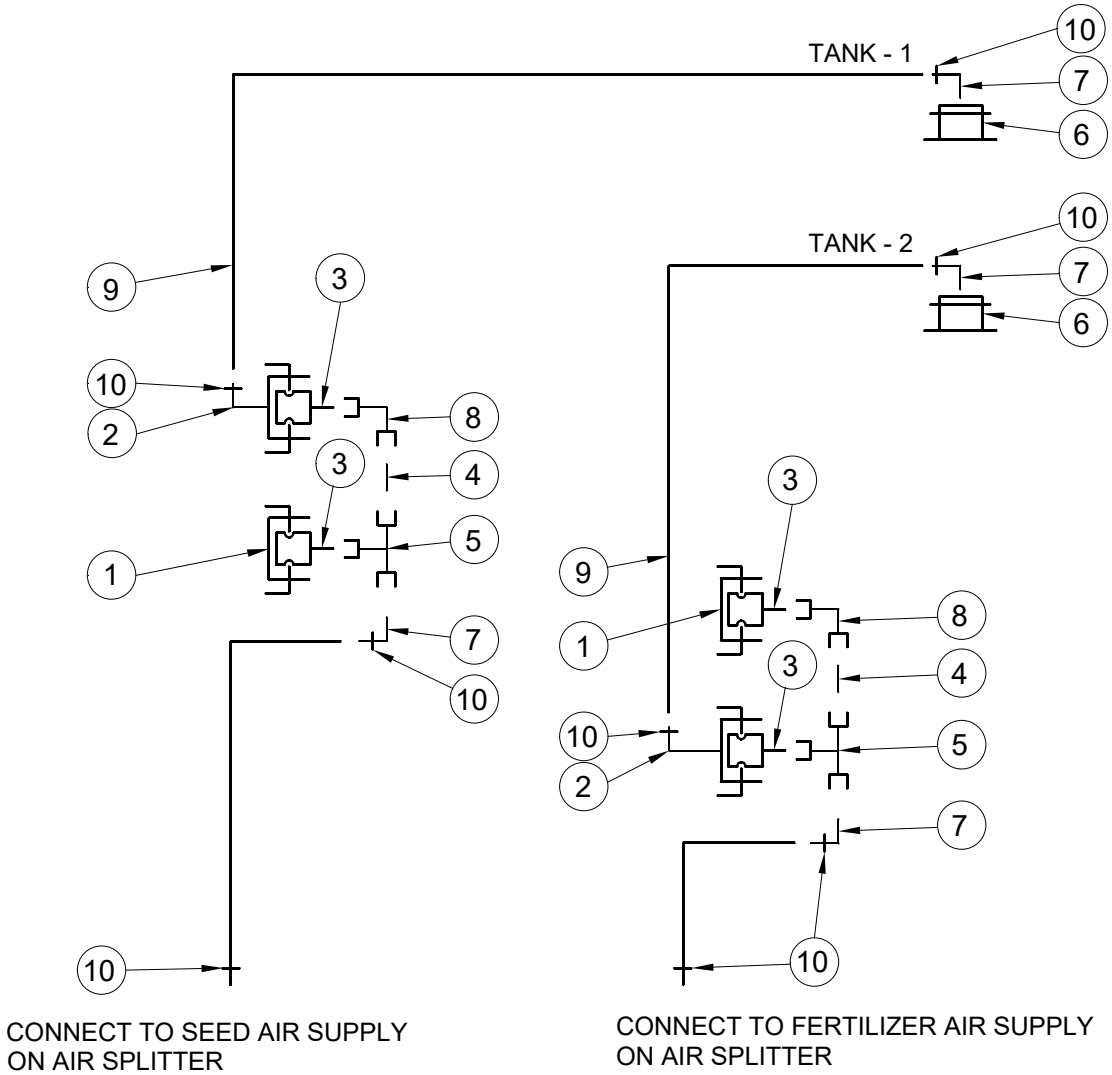

Top Up Air Schematic - 520 Nova Single Shoot

Item	Qty.	Part No.	Description	Item	Qty.	Part No.	Description
1	6	256614	CLAMP, GEAR - S/S - 1 1/4 IN - HAS20				
2	30	256506	HOSE - 1 1/4 IN - SPIRAL BRAIDED				
3	1	260101	BANJO, 1 1/2" POLY PIPE ELBOW 90				
4	1	260120	BANJO, NIPPLE - 1 1/2 MPT - SHORT				
5	1	260119	BANJO, TEE - 1 1/2 FPT X 1 1/2 FPT X 1 1/2 FPT				
6	2	260118	BANJO, BULKHEAD - 1 1/2" - POLY				
7	5	260104	BANJO, 1 1/2" MALE THD. X 1 1/2" HB 90				

Top Up Air Schematic - 520 Nova Single Shoot

Part Number: 500947

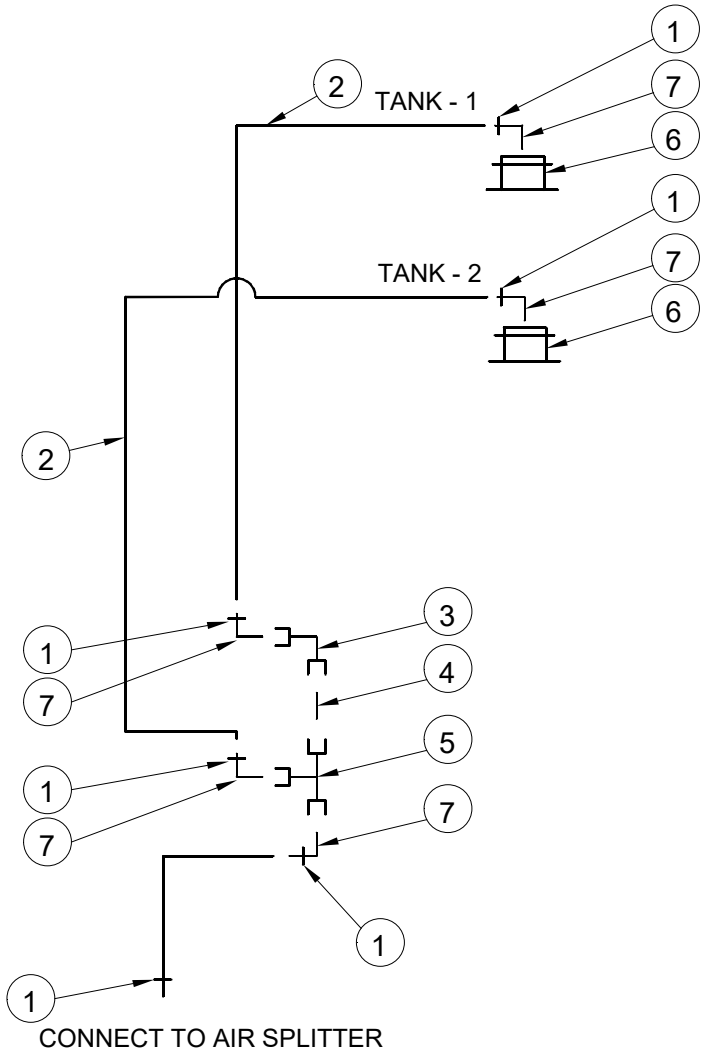

Top Up Air Schematic - 560 Nova Dual Shoot

Item	Qty.	Part No.	Description	Item	Qty.	Part No.	Description
1	3	260123	BANJO, COUPLER - CAP - 1 1/2"				
2	3	260122	BANJO, COUPLER - 90D - FEMALE ADAPTER - 1 1/2" HB				
3	6	260121	BANJO, COUPLER - MALE ADAPTER - 1 1/2" MPT				
4	4	260120	BANJO, NIPPLE - 1 1/2 MPT - SHORT				
5	4	260119	BANJO, TEE - 1 1/2 FPT X 1 1/2 FPT X 1 1/2 FPT				
6	2	260118	BANJO, BULKHEAD - 1 1/2" - POLY				
7	4	260104	BANJO, 1 1/2" MALE THD. X 1 1/2" HB 90				
8	2	260101	BANJO, 1 1/2" POLY PIPE ELBOW 90				
9	60	256506	HOSE - 1 1/4 IN - SPIRAL BRAIDED				
10	10	256614	CLAMP, GEAR - S/S - 1 1/4 IN - HAS20				

Part Number:500948-1

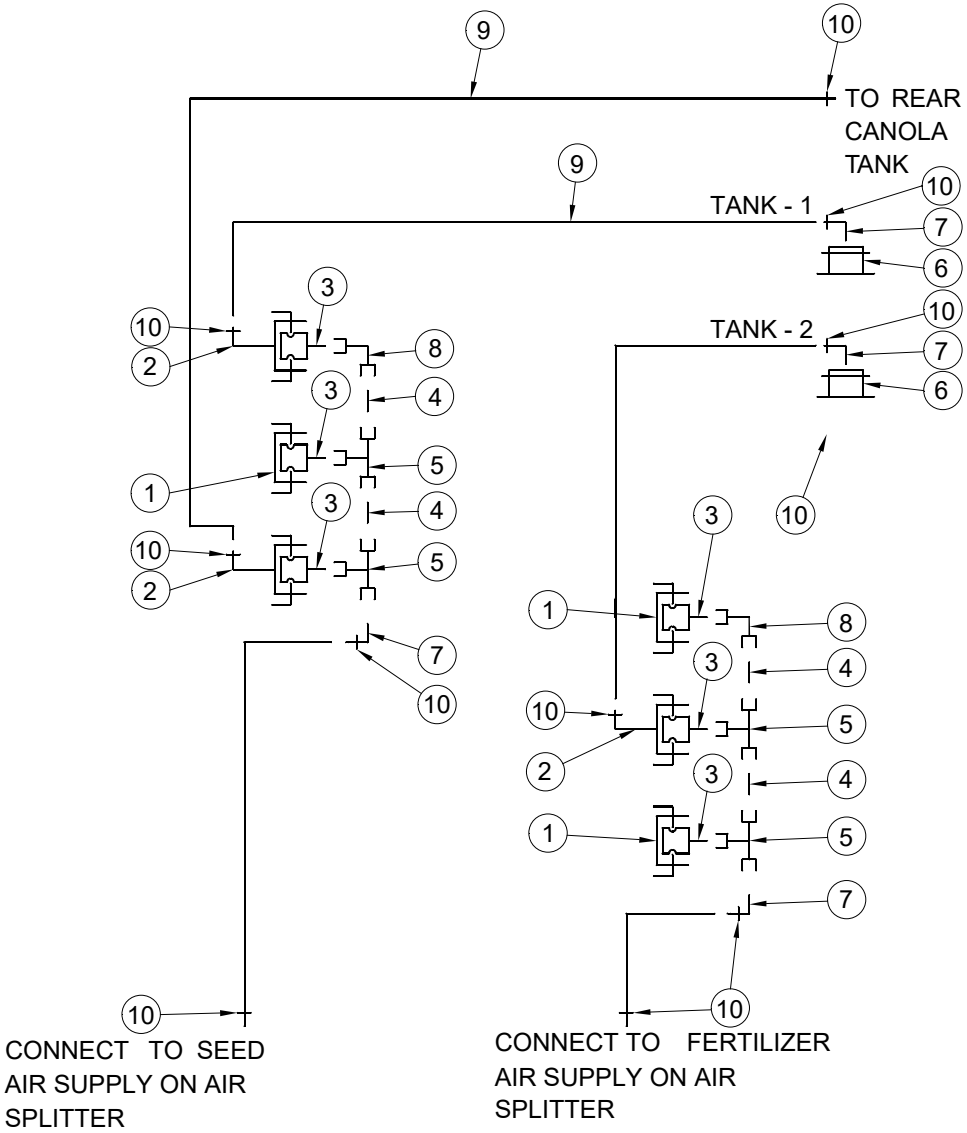

Top Up Air Schematic - 630 TBT Nova Single Shoot

Item	Qty.	Part No.	Description	Item	Qty.	Part No.	Description
1	8	256614	CLAMP, GEAR - S/S - 1 1/4 IN - HAS20				
2	90	256506	HOSE - 1 1/4 IN - SPIRAL BRAIDED				
3	1	260101	BANJO, 1 1/2" POLY PIPE ELBOW 90				
4	2	260120	BANJO, NIPPLE - 1 1/2 MPT - SHORT				
5	2	260119	BANJO, TEE - 1 1/2 FPT X 1 1/2 FPT X 1 1/2 FPT				
6	2	260118	BANJO, BULKHEAD - 1 1/2" - POLY				
7	6	260104	BANJO, 1 1/2" MALE THD. X 1 1/2" HB 90				

Top Up Air Schematic - 630 Tow Between Nova Single Shoot
Part Number: 503487

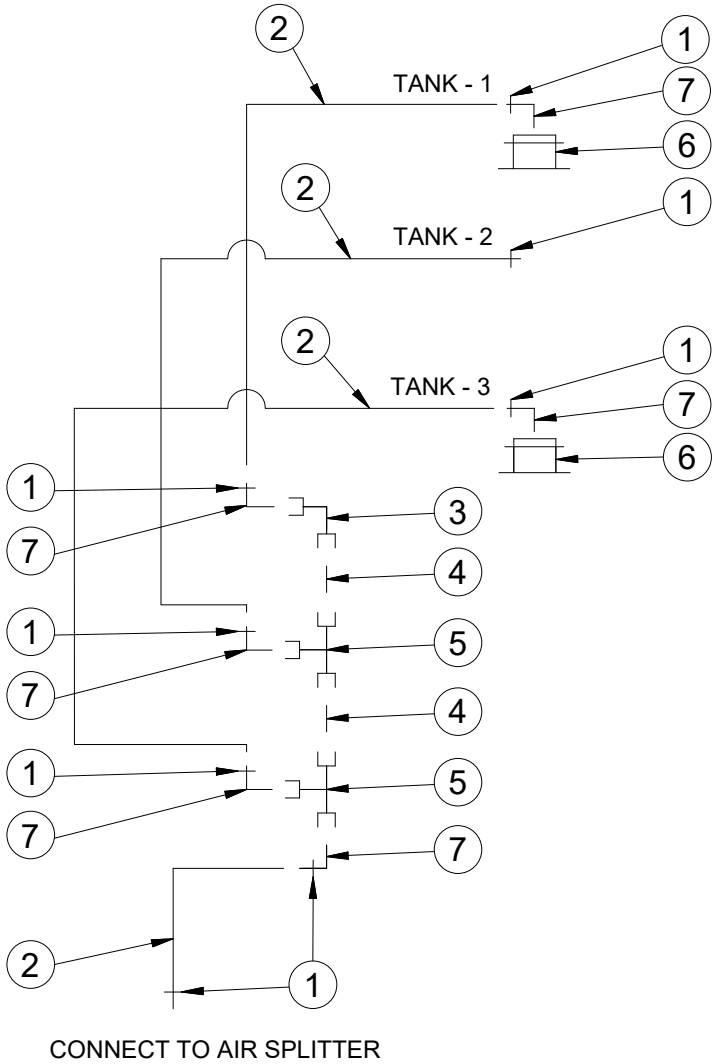

Top Up Air Schematic - 630 TBH Nova Single Shoot

Item	Qty.	Part No.	Description	Item	Qty.	Part No.	Description
1	8	256614	CLAMP, GEAR - S/S - 1 1/4 IN - HAS20				
2	90	256506	HOSE - 1 1/4 IN - SPIRAL BRAIDED				
3	1	260101	BANJO, 1 1/2" POLY PIPE ELBOW 90				
4	2	260120	BANJO, NIPPLE - 1 1/2 MPT - SHORT				
5	2	260119	BANJO, TEE - 1 1/2 FPT X 1 1/2 FPT X 1 1/2 FPT				
6	2	260118	BANJO, BULKHEAD - 1 1/2" - POLY				
7	6	260104	BANJO, 1 1/2" MALE THD. X 1 1/2" HB 90				

Top Up Air Schematic - 630 Tow Behind Nova Single Shoot

Part Number: 503489

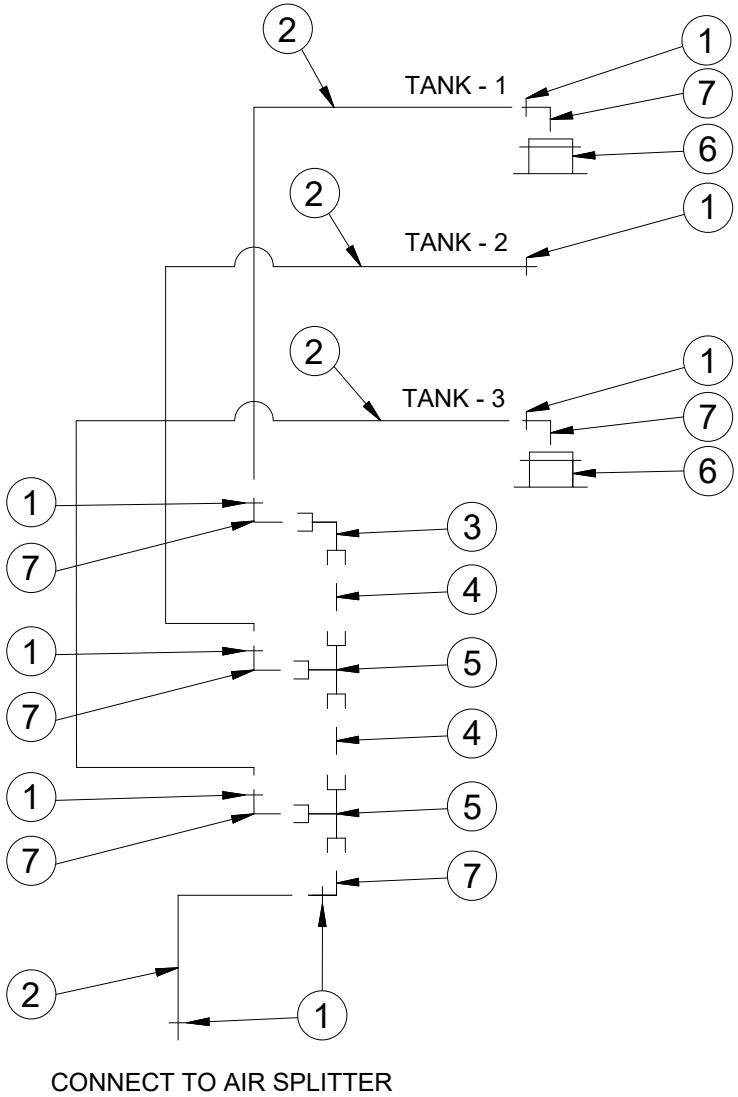

Top Up Air Schematic - 780 Nova Dual Shoot

Item	Qty.	Part No.	Description	Item	Qty.	Part No.	Description
1	3	260123	BANJO, COUPLER - CAP - 1 1/2"				
2	3	260122	BANJO, COUPLER - 90D - FEMALE ADAPTER - 1 1/2" HB				
3	6	260121	BANJO, COUPLER - MALE ADAPTER - 1 1/2" MPT				
4	4	260120	BANJO, NIPPLE - 1 1/2 MPT - SHORT				
5	4	260119	BANJO, TEE - 1 1/2 FPT X 1 1/2 FPT X 1 1/2 FPT				
6	3	260118	BANJO, BULKHEAD - 1 1/2" - POLY				
7	5	260104	BANJO, 1 1/2" MALE THD. X 1 1/2" HB 90				
8	2	260101	BANJO, 1 1/2" POLY PIPE ELBOW 90				
9	100	256506	HOSE - 1 1/4 IN - SPIRAL BRAIDED				
10	10	256614	CLAMP, GEAR - S/S - 1 1/4 IN - HAS20				

Top Up Air Schematic - 780 Nova Dual Shoot
Part Number: 500940

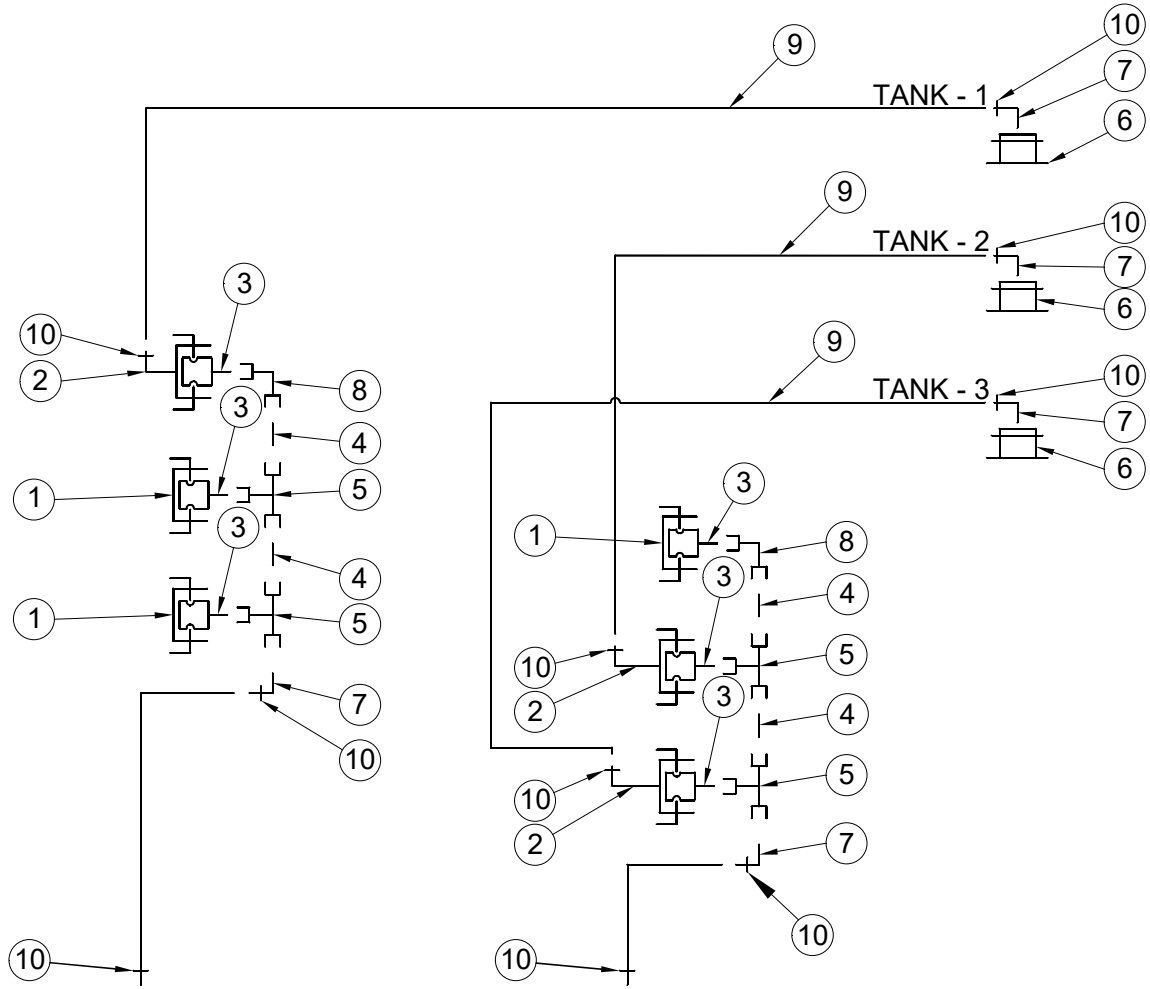

Top Up Air Schematic - 780 Nova Single Shoot

Item	Qty.	Part No.	Description	Item	Qty.	Part No.	Description
1	8	256614	CLAMP, GEAR - S/S - 1 1/4 IN - HAS20				
2	100	256506	HOSE - 1 1/4 IN - SPIRAL BRAIDED				
3	1	260101	BANJO, 1 1/2" POLY PIPE ELBOW 90				
4	2	260120	BANJO, NIPPLE - 1 1/2 MPT - SHORT				
5	2	260119	BANJO, TEE - 1 1/2 FPT X 1 1/2 FPT X 1 1/2 FPT				
6	3	260118	BANJO, BULKHEAD - 1 1/2" - POLY				
7	7	260104	BANJO, 1 1/2" MALE THD. X 1 1/2" HB 90				

Top Up Air Schematic - 780 Nova Single Shoot
Part Number: 500941

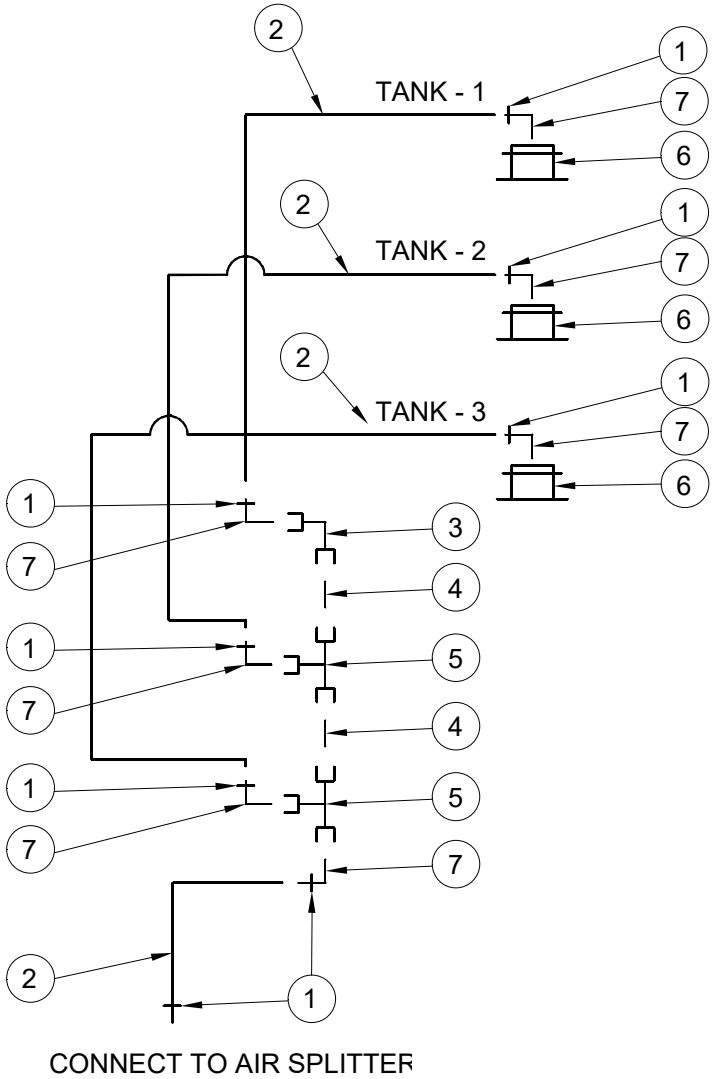

Top Up Air Schematic - 820 Nova Dual Shoot

Item	Qty.	Part No.	Description	Item	Qty.	Part No.	Description
1	4	260123	BANJO, COUPLER - CAP - 1 1/2"				
2	4	260122	BANJO, COUPLER - 90D - FEMALE ADAPTER - 1 1/2" HB				
3	8	260121	BANJO, COUPLER - MALE ADAPTER - 1 1/2" MPT				
4	6	260120	BANJO, NIPPLE - 1 1/2 MPT - SHORT				
5	6	260119	BANJO, TEE - 1 1/2 FPT X 1 1/2 FPT X 1 1/2 FPT				
6	3	260118	BANJO, BULKHEAD - 1 1/2" - POLY				
7	5	260104	BANJO, 1 1/2" MALE THD. X 1 1/2" HB 90				
8	2	260101	BANJO, 1 1/2" POLY PIPE ELBOW 90				
9	110	256506	HOSE - 1 1/4 IN - SPIRAL BRAIDED				
10	12	256614	CLAMP, GEAR - S/S - 1 1/4 IN - HAS20				

Top Up Air Schematic - 820 Nova Dual Shoot
Part Number: 500943-1

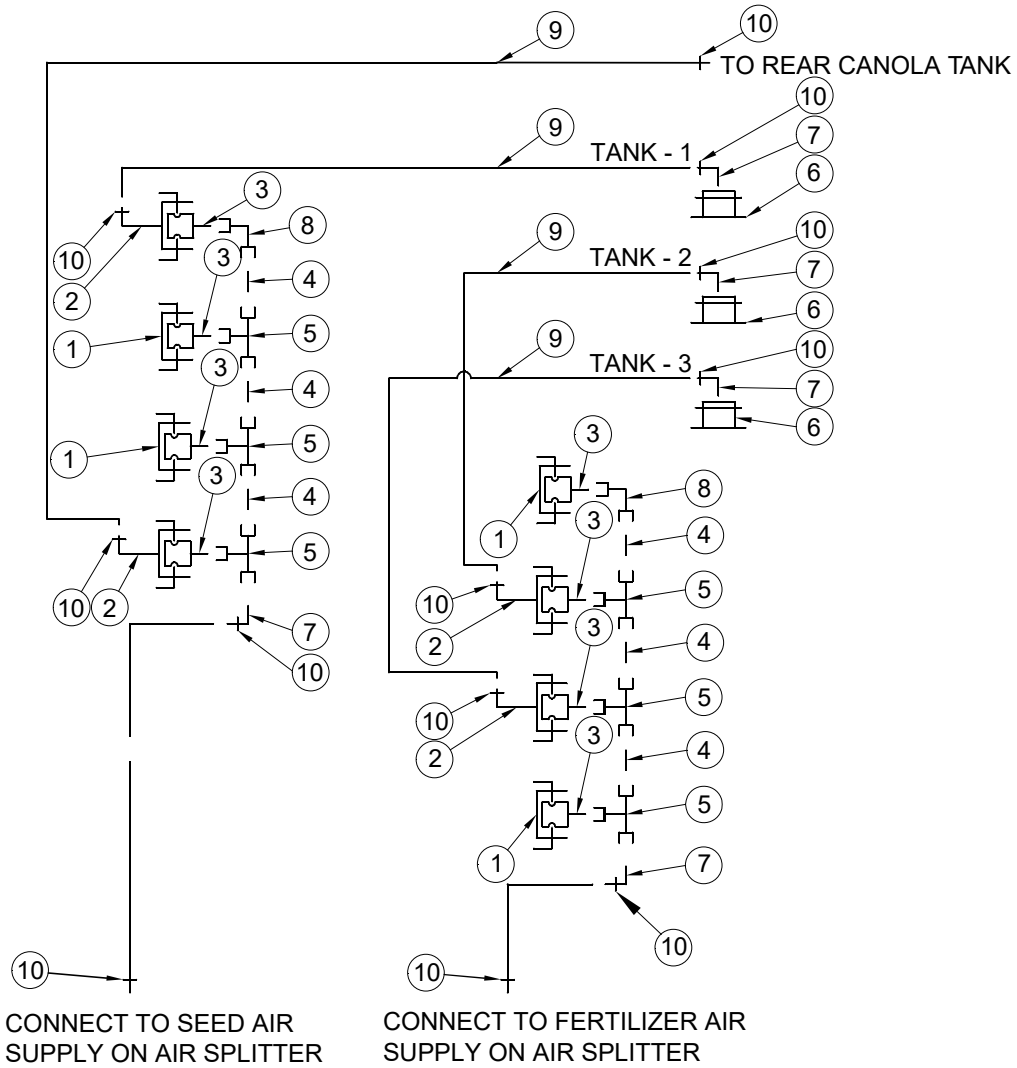

Compressed Air System

Item	Qty.	Part No.	Description
1	1	402137-1	ASSY, COMPRESSOR MOUNT - PACBRAKE - BLK
2	1	402118-3	PLATE, FRMD 10 GA IN - COVER - COMPRESSOR RELAY
3	1	402115-8	PLATE, FRMD 1/4 IN - AIR TANK MOUNT - ZONE COMMAND
4	8	250036	BOLT, HEX 3/8 X 1 IN GR5 PL
5	2	250106	BOLT, CARRIAGE - 5/16 X 3/4 IN UNC GR5 PL
6	2	250403	NUT, FLANGE - 5/16 UNC PL
7	12	250453	NUT, HEX - 3/8 UNC PL
8	16	250557	WASHER, FLAT - 3/8 IN GR8 PL
9	2	250213	BOLT, U-SQ - 1/2 UNC X 6ID X 5 1/2 IN - 2 IN THD - GR5 PL
10	4	250555	WASHER, FLAT - 1/2 IN - GR8 - PL
11	4	250450	NUT, HEX 1/2 UNC GR5 PL
12	6	250033	BOLT, HEX 1/4 X 1 IN GR5 PL
13	10	250559	WASHER, FLAT - 1/4 IN PL
14	4	250458	NUT, HEX - 1/4 UNC PL
15	1	257112	COMPRESSOR, KIT - 12VDC - PACBRAKE #HP10626
16	1	257109	FILTER, COMPRESSOR INTAKE - HOUSING W/FILTER
17	1	260570	ADAPTOR, BRASS - REDUCER - 3/8 MPT X 1/2 FPT
18	1	260571	ADAPTOR, BRASS - 1/2 MPT X 3/4 HB
19	1	256527	HOSE, RUBBER 3/4 IN (200 PSI)
20	1	260490	SCREEN, PRE-FILTER, COMPRESSOR INTAKE
21	1	260520	CONNECTOR, 3/8 NPT M X 3/8 PUSH ON - AIR
22	1	260535	ADAPTOR, BRASS - CROSS - 3/8 MPT - FEMALE
23	1	260574	FILTER, PARTICULATE - 14F15BB
24	1	260573	DRYER, AIR - DESICCANT - WILKERSON - X06-02-000
25	1	402132	SHEET, FRMD 10 GA - MOUNT PLATE - FRT - BLK
26	1	402129	SHEET, FRMD 10 GA - MOUNT PLATE - REAR - BLK
27	1	260503	REGULATOR/FILTER, AIR - PARKER - ZONE COMMAND
28	1	260551	GAUGE, AIR - 1/8 NPT M - 0 - 160 PSI
29	1	260516	CONNECTOR - 1/4 NPT M X 3/8 PUSH ON - AIR
30	4	260576	ADAPTOR, BRASS - NIPPLE - 1/4 NPT
31	1	260575	FILTER, COALESCING - 10F15ED
32	1	260526	ADAPTOR, BRASS - HEX NIPPLE - 3/8 MPT x 1/4 MPT
33	2	250573	BOLT, HEX - 1/4 X 4 1/2 UNC - GR5 - PL
34	4	250507	NUT, LOCK - 1/4 UNC - STOVER - PL
35	1	257108	TANK, AIR - 5 GAL
36	1	260513	AUTOMATIC DRIP LEG DRAIN - 1/4 IN - 06D1NA - PARKER
37	1	402159	PLATE, FRMD 1/4 IN - MOUNT - AIR TANK - BLK
38	2	250251	BOLT, U-SQ - 3/8 UNC X 8 ID X 5 1/2 IN - 2 IN THD - GR8 PL
39	1	260504	VALVE, RELIEF - AIR - PARKER
40	1	257106	PRESSURE SWITCH - 85/105 PSI ON/OFF - 1/8 NPT - VIAIR #90101

Compressed Air System
Part No. 408779-9

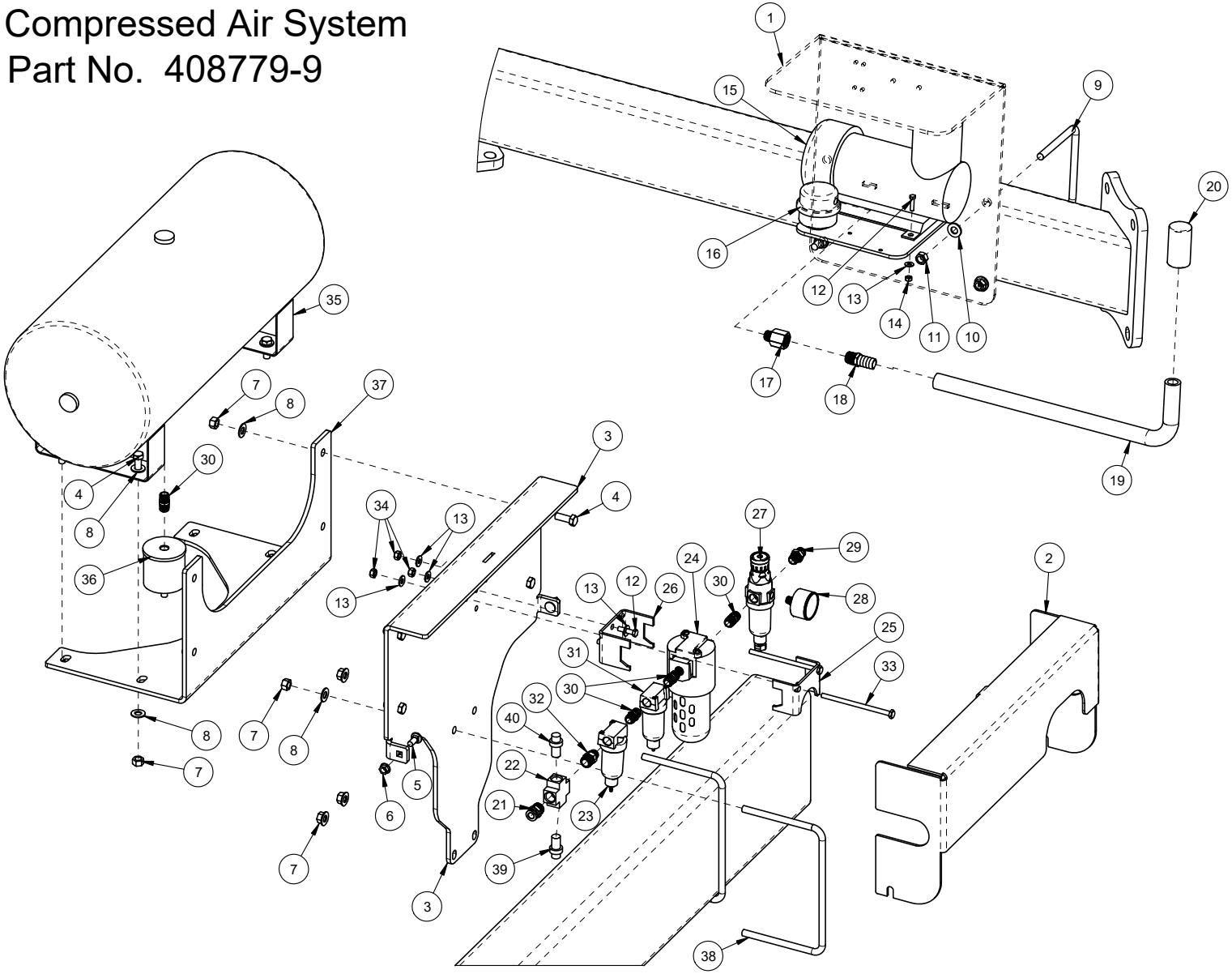

Meter Drive Hydraulic Schematic - Nova - 2 Tanks

Item	Qty.	Part No.	Description	Item	Qty.	Part No.	Description
1	2	258367-2	HOSE, 1/2-2WB X 240LOA - 08JIC F-SW X 08JIC F-SW				
2	1	258154	HOSE, 3/8-2WB X 31 LOA - 06 JIC F-SW X 08 JIC F-SW				
3	2	258141	HOSE, 3/8-2WB X 30 1/2 LOA - 06 JIC F-SW X 06 JIC F-SW				
4	1	258430	HOSE, 3/8-2WB X 151 LOA - 06 JIC F-SW X 08 JIC F-SW				
5	1	258443	HOSE, 3/8-2WB X 68 LOA - 06 JIC F-SW X 08 JIC F-SW				
6	1	258642	HOSE, 3/8-2WB X 118 LOA - 08 JIC F-SW X 06 JIC F-SW				
7	6	258051	CONNECTOR, 06 ORB M X 06 JIC M				
8	2	221570	TEE, GAUGE - 06 JIC F-SW X 06 JIC M X 04 ORB F - RUN				
9	2	258053	CONNECTOR, 08 ORB M X 06 JIC M				
10	2	258028	TEE, 08 JIC M X M X M				
11	2	258057	CONNECTOR, 1/2 NPT M X 08 JIC M				
12	1	258070	COUPLER, MALE - PIONEER - 1/2 NPT F				
13	1	258071	COUPLER, MALE - NON-VALVED - 1/2 NPT F				
14	2	258041	PLUG, 06 ORB M				
15	1	258385	CONNECTOR, 06 ORB M X 08 JIC M				
16	1	257993	CONNECTOR, 06 ORB M X 08 JIC F-SW				
A	2	258092	GAUGE, PRESSURE - SPG-63-1500-S-U - GLYCERINE FILLED				
B	2	260718	VALVE, PWM - OMNISEED - C/W MANIFOLD - RAVEN				
C	2	260717	MOTOR, HYD - OMNISEED - 7/8 HEX - RAVEN				
D	1	258611	FILTER, INLINE-ARROW 9152V-25 VITON SEAL-06 ORB				

Meter Drive Hydraulic Schematic - Nova - 2 Tanks
Part Number: 401228-8

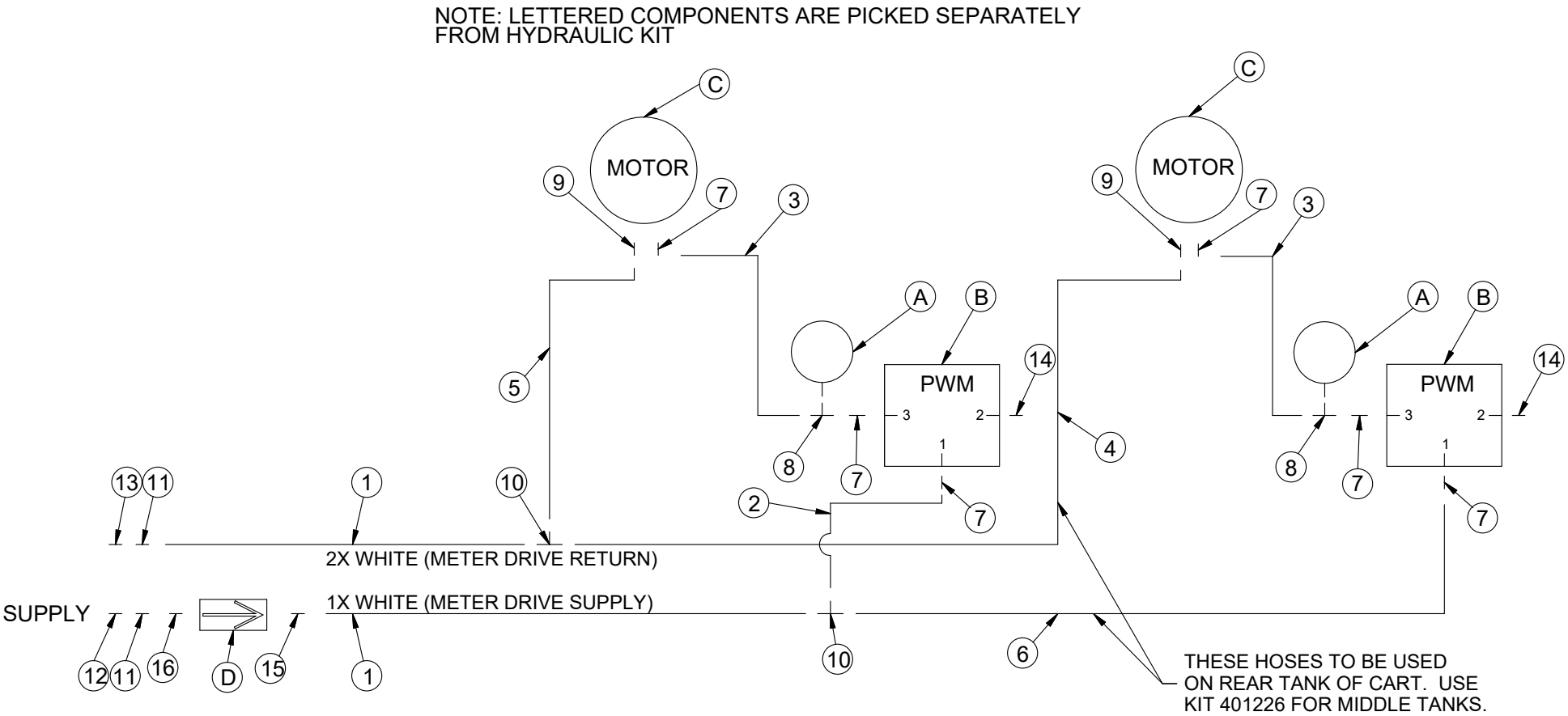

Meter Drive Hydraulic Schematic - Nova - 3 Tanks

Item	Qty.	Part No.	Description	Item	Qty.	Part No.	Description
1	9	258051	CONNECTOR, 06 ORB M X 06 JIC M				
2	4	258028	TEE, 08 JIC M X M X M				
3	1	258076	COUPLER, MALE - PIONEER - 08 ORB F				
4	2	258005	EL, 90D - 06 JIC M X 06 JIC F-SW				
5	2	258053	CONNECTOR, 08 ORB M X 06 JIC M				
6	3	221570	TEE, GAUGE - 06 JIC F-SW X 06 JIC M X 04 ORB F - RUN				
7	3	258038	CONNECTOR, 06 JIC F-SW X 1/4 NPT F				
8	6	258002	EL, 90D - 06 JIC M X 06 ORB M				
9	2	258443	HOSE, 3/8-2WB X 68 LOA - 06 JIC F-SW X 08 JIC F-SW				
10	3	258041	PLUG, 06 ORB M				
11	1	258420-3	HOSE, 3/8-2WB X 99 LOA - 08 JIC F-SW X 08 JIC F-SW				
12	3	258141	HOSE, 3/8-2WB X 30 1/2 LOA - 06 JIC F-SW X 06 JIC F-SW				
13	2	258154	HOSE, 3/8-2WB X 31 LOA - 06 JIC F-SW X 08 JIC F-SW				
14	1	258050	CONNECTOR, 08 ORB M X 08 JIC M				
15	2	258137	HOSE, 1/2-2WB X 48LOA - 08JIC F-SW X 08JIC F-SW				
16	2	258367-2	HOSE, 1/2-2WB X 240LOA - 08JIC F-SW X 08JIC F-SW				
17	1	258057	CONNECTOR, 1/2 NPT M X 08 JIC M				
18	1	258071	COUPLER, MALE - NON-VALVED - 1/2 NPT F				
19	2	258385	CONNECTOR, 06 ORB M X 08 JIC M				
20	1	258000	EL, 90D - 08 JIC M X 08 JIC F-SW				
21	1	258050	CONNECTOR, 08 ORB M X 08 JIC M				
22	1	258249	HOSE, 1/2-2WB X 12LOA - 06JIC F-SW X 06JIC F-SW				
23	1	257993	CONNECTOR, 06 ORB M X 08 JIC F-SW				
A	3	258094	GAUGE, PRESSURE - SPG-1500P 1/4 NPT				
B	3	260717	MOTOR, HYD - OMNISEED - 7/8 HEX - RAVEN				
C	3	260874	VALVE, PWM - OMNISEED - C/W MANIFOLD - MAN. O/R				
D	1	258611	FILTER, INLINE-ARROW 9152V-25 VITON SEAL-06 ORB				
-	0	401249-5	CTN, HYD - METER DRIVE - TOW BEHIND NOVA - 3 TANKS				

Meter Drive Hydraulic Schematic - Nova - 3 Tanks
Part Number: 401249-5

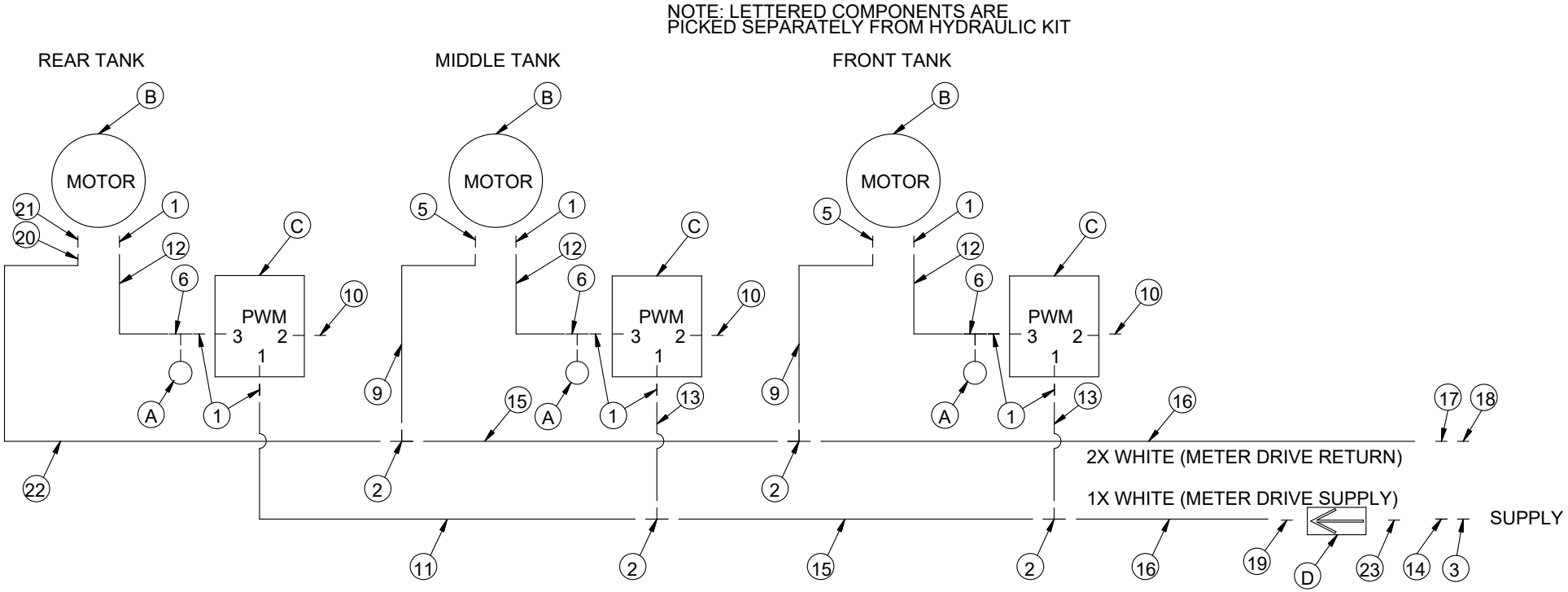

Meter Drive Hydraulic Schematic - Nova - 260L - 1 Tank

Item	Qty.	Part No.	Description	Item	Qty.	Part No.	Description
1	2	258347	HOSE, 1/2-2WB X 252LOA - 08JIC F-SW X 08JIC F-SW				
2	1	258154	HOSE, 3/8-2WB X 31 LOA - 06 JIC F-SW X 08 JIC F-SW				
3	1	258141	HOSE, 3/8-2WB X 30 1/2 LOA - 06 JIC F-SW X 06 JIC F-SW				
5	1	258443	HOSE, 3/8-2WB X 68 LOA - 06 JIC F-SW X 08 JIC F-SW				
7	3	258051	CONNECTOR, 06 ORB M X 06 JIC M				
9	1	258053	CONNECTOR, 08 ORB M X 06 JIC M				
10	2	257979	EL, 90D - 08 JIC M X M				
11	2	258057	CONNECTOR, 1/2 NPT M X 08 JIC M				
12	1	258070	COUPLER, MALE - PIONEER - 1/2 NPT F				
13	1	258071	COUPLER, MALE - NON-VALVED - 1/2 NPT F				
14	1	258041	PLUG, 06 ORB M				
16	1	221570	TEE, GAUGE - 06 JIC F-SW X 06 JIC M X 04 ORB F - RUN				
17	1	258385	CONNECTOR, 06 ORB M X 08 JIC M				
18	1	257993	CONNECTOR, 06 ORB M X 08 JIC F-SW				
A	1	258092	GAUGE, PRESSURE - SPG-63-1500-S-U - GLYCERINE FILLED				
B	1	260718	VALVE, PWM - OMNISEED - C/W MANIFOLD - RAVEN				
C	1	260717	MOTOR, HYD - OMNISEED - 7/8 HEX - RAVEN				
D	1	258611	FILTER, INLINE-ARROW 9152V-25 VITON SEAL-06 ORB				

Part Number: 401260-3

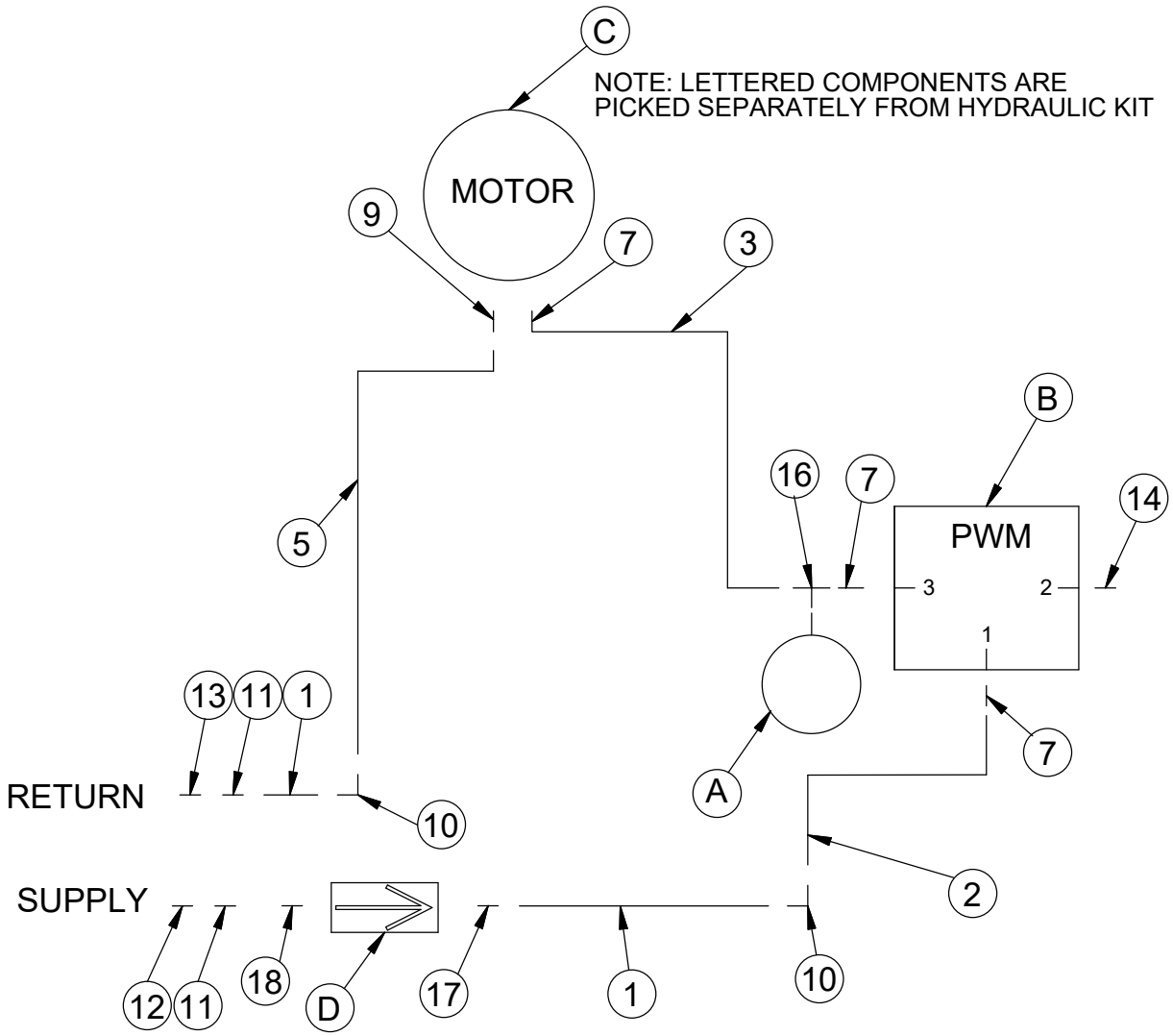

Meter Drive Hydraulic Schematic - Nova - 260L - 1 Tank

Meter Drive Hydraulic Schematic Nova T/B - 2 Tanks

Item	Qty.	Part No.	Description	Item	Qty.	Part No.	Description
1	6	258051	CONNECTOR, 06 ORB M X 06 JIC M				
2	2	258028	TEE, 08 JIC M X M X M				
3	1	258076	COUPLER, MALE - PIONEER - 08 ORB F				
5	2	258053	CONNECTOR, 08 ORB M X 06 JIC M				
6	2	221570	TEE, GAUGE - 06 JIC F-SW X 06 JIC M X 04 ORB F - RUN				
9	2	258443	HOSE, 3/8-2WB X 68 LOA - 06 JIC F-SW X 08 JIC F-SW				
10	2	258041	PLUG, 06 ORB M				
11	1	258446	HOSE, 1/2-2WB X 90LOA - 08 JIC F-SW X 08 JIC F-SW				
12	2	258141	HOSE, 3/8-2WB X 30 1/2 LOA - 06 JIC F-SW X 06 JIC F-SW				
13	2	258511	HOSE, 1/2-2WB X 95 LOA - 08 JIC F-SW X 08 JIC F-SW				
14	1	258154	HOSE, 3/8-2WB X 31 LOA - 06 JIC F-SW X 08 JIC F-SW				
15	1	258430	HOSE, 3/8-2WB X 151 LOA - 06 JIC F-SW X 08 JIC F-SW				
16	1	258057	CONNECTOR, 1/2 NPT M X 08 JIC M				
17	1	258050	CONNECTOR, 08 ORB M X 08 JIC M				
18	1	258385	CONNECTOR, 06 ORB M X 08 JIC M				
19	1	258020	TEE, 08 JIC F-SW X 08 JIC M X 08 JIC M - RUN				
20	1	257993	CONNECTOR, 06 ORB M X 08 JIC F-SW				
21	1	258073	COUPLER, FEMALE - NON-VALVED - 1/2 NPT F				
22	1	258075	PLUG, DUST - STRAIGHT THROUGH				
A	2	258092	GAUGE, PRESSURE - SPG-63-1500-S-U - GLYCERINE FILLED				
B	2	260717	MOTOR, HYD - OMNISEED - 7/8 HEX - RAVEN				
C	2	260718	VALVE, PWM - OMNISEED - C/W MANIFOLD - RAVEN				
D	1	258611	FILTER, INLINE-ARROW 9152V-25 VITON SEAL-06 ORB				
E	2	257999	VALVE, CHECK - INLINE - 08 JIC M X F - VONBERG				

Meter Drive Hydraulic Schematic Nova T/B - 2 Tanks
Part Number: 401276-1

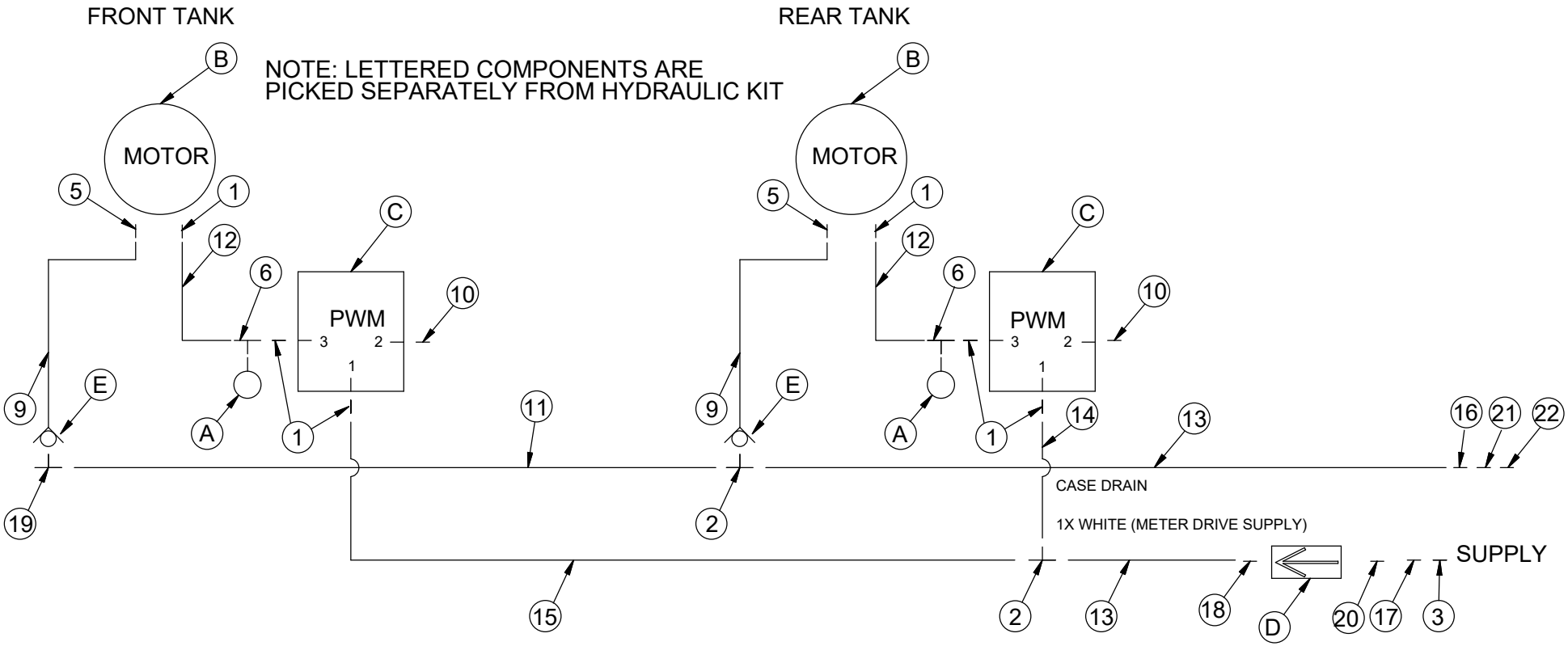

Meter Drive Hydraulic Schematic T/B Nova + 1 Tank

Item	Qty.	Part No.	Description	Item	Qty.	Part No.	Description
1	1	258020	TEE, 08 JIC F-SW X 08 JIC M X 08 JIC M - RUN				
2	2	258028	TEE, 08 JIC M X M X M				
3	3	258051	CONNECTOR, 06 ORB M X 06 JIC M				
5	2	258053	CONNECTOR, 08 ORB M X 06 JIC M				
6	2	221570	TEE, GAUGE - 06 JIC F-SW X 06 JIC M X 04 ORB F - RUN				
9	2	258443	HOSE, 3/8-2WB X 68 LOA - 06 JIC F-SW X 08 JIC F-SW				
10	2	258041	PLUG, 06 ORB M				
11	2	258446	HOSE, 1/2-2WB X 90LOA - 08 JIC F-SW X 08 JIC F-SW				
12	2	258141	HOSE, 3/8-2WB X 30 1/2 LOA - 06 JIC F-SW X 06 JIC F-SW				
13	1	258154	HOSE, 3/8-2WB X 31 LOA - 06 JIC F-SW X 08 JIC F-SW				
A	2	258092	GAUGE, PRESSURE - SPG-63-1500-S-U - GLYCERINE FILLED				
B	2	260717	MOTOR, HYD - OMNISEED - 7/8 HEX - RAVEN				
C	2	260718	VALVE, PWM - OMNISEED - C/W MANIFOLD - RAVEN				
D	1	258611	FILTER, INLINE-ARROW 9152V-25 VITON SEAL-06 ORB				
E	2	257999	VALVE, CHECK - INLINE - 08 JIC M X F - VONBERG				

Part Number: 401277-1

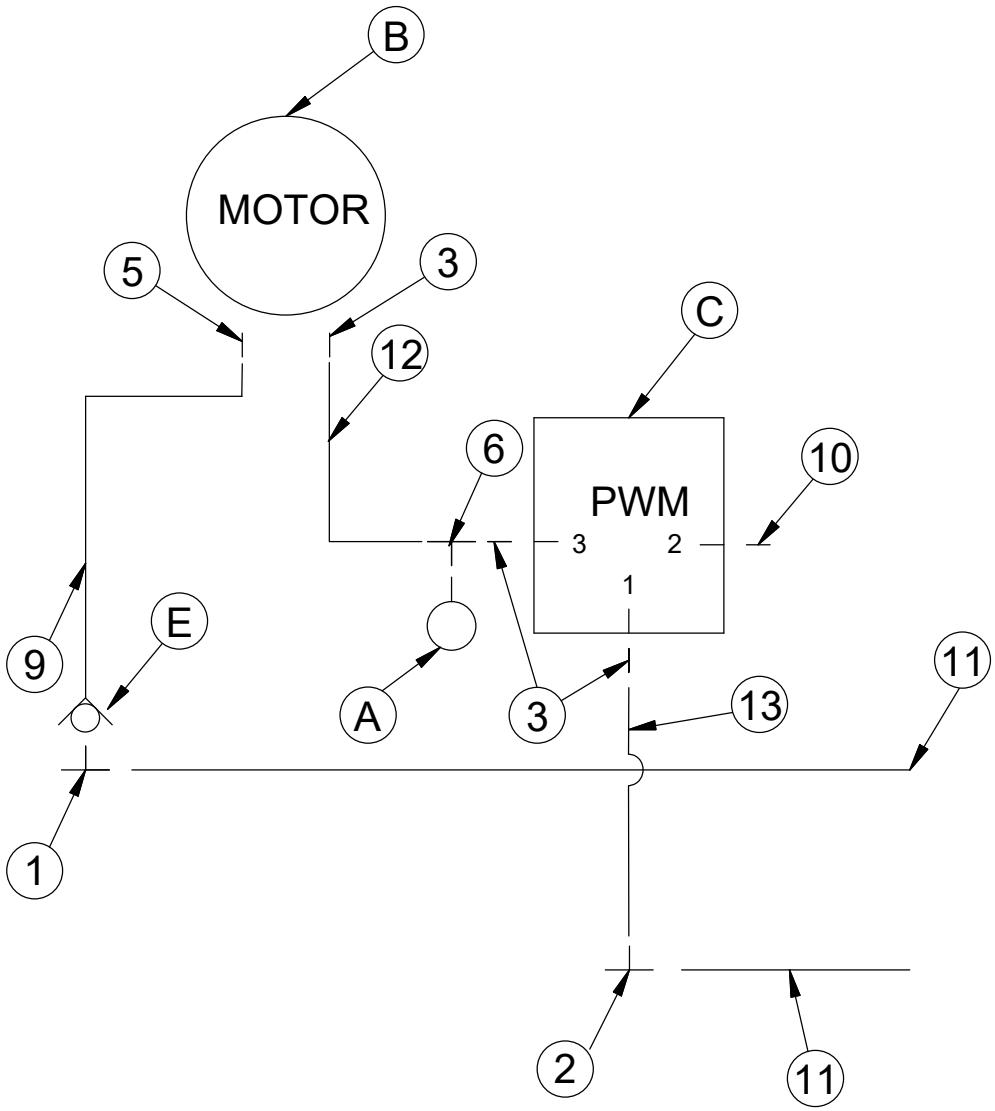

Meter Drive Hydraulic Schematic T/B Nova + 1 Tank

Meter Drive Hydraulic Schematic Nova + 1 Tank

Item	Qty.	Part No.	Description	Item	Qty.	Part No.	Description
1	2	258446	HOSE, 1/2-2WB X 90LOA - 08 JIC F-SW X 08 JIC F-SW				
2	1	258154	HOSE, 3/8-2WB X 31 LOA - 06 JIC F-SW X 08 JIC F-SW				
3	1	258141	HOSE, 3/8-2WB X 30 1/2 LOA - 06 JIC F-SW X 06 JIC F-SW				
4	1	258443	HOSE, 3/8-2WB X 68 LOA - 06 JIC F-SW X 08 JIC F-SW				
5	1	221570	TEE, GAUGE - 06 JIC F-SW X 06 JIC M X 04 ORB F - RUN				
6	3	258051	CONNECTOR, 06 ORB M X 06 JIC M				
7	1	258041	PLUG, 06 ORB M				
8	1	258053	CONNECTOR, 08 ORB M X 06 JIC M				
9	2	258028	TEE, 08 JIC M X M X M				
A	1	258092	GAUGE, PRESSURE - SPG-63-1500-S-U - GLYCERINE FILLED				
B	1	260717	MOTOR, HYD - OMNISEED - 7/8 HEX - RAVEN				
C	1	260718	VALVE, PWM - OMNISEED - C/W MANIFOLD - RAVEN				

Meter Drive Hydraulic Schematic + 1 Tank
Part Number: 401226-4

NOTE: LETTERED COMPONENTS ARE
PICKED SEPARATELY FROM HYDRAULIC KIT

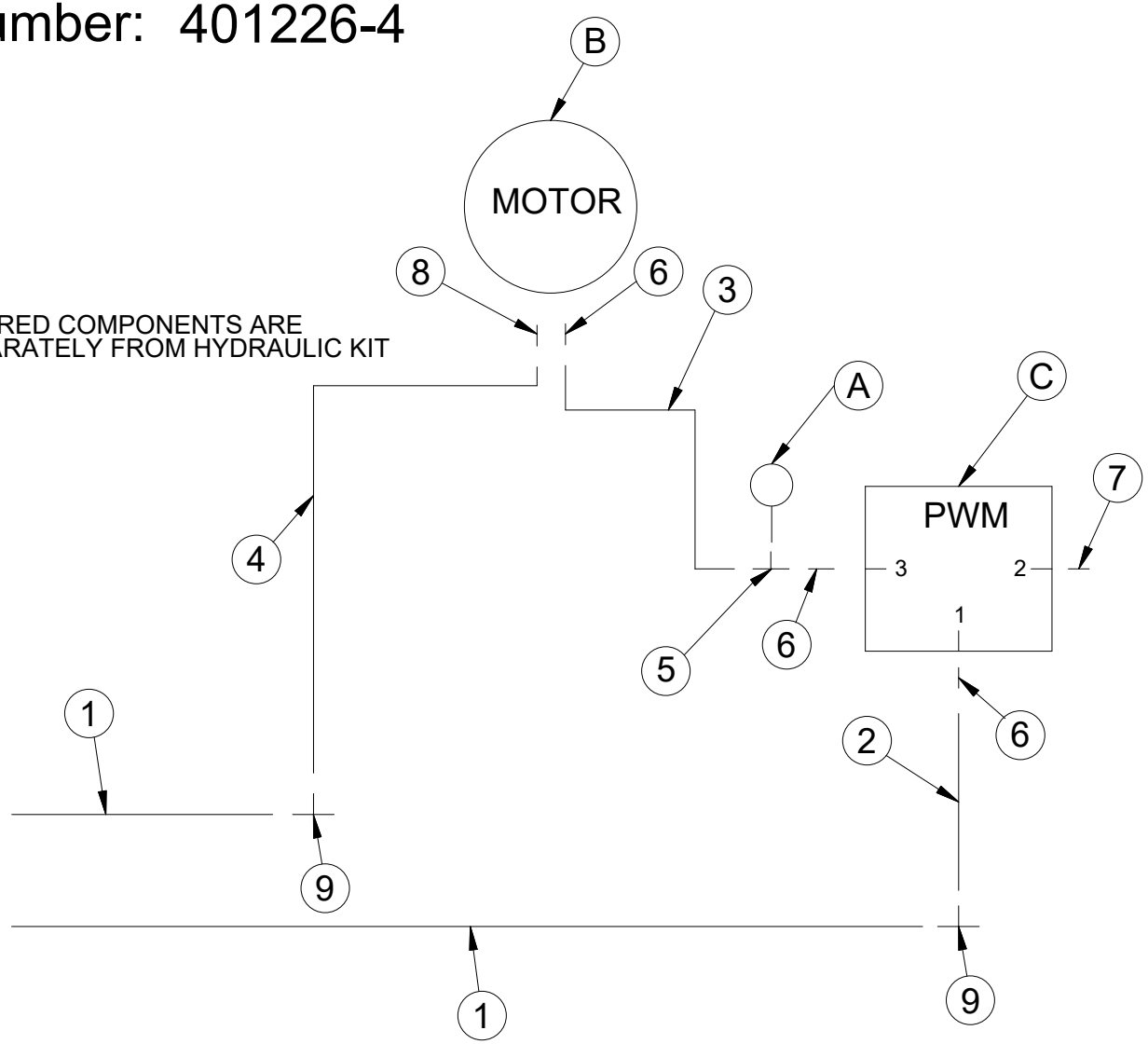

Meter Drive Hydraulic Schematic T/B Nova - 3 Tanks

Item	Qty.	Part No.	Description	Item	Qty.	Part No.	Description
1	9	258051	CONNECTOR, 06 ORB M X 06 JIC M				
2	4	258028	TEE, 08 JIC M X M X M				
3	1	258076	COUPLER, MALE - PIONEER - 08 ORB F				
5	3	258053	CONNECTOR, 08 ORB M X 06 JIC M				
6	3	221570	TEE, GAUGE - 06 JIC F-SW X 06 JIC M X 04 ORB F - RUN				
9	3	258443	HOSE, 3/8-2WB X 68 LOA - 06 JIC F-SW X 08 JIC F-SW				
10	3	258041	PLUG, 06 ORB M				
11	2	258442	HOSE, 3/8-2WB X 68LOA - 08 JIC F-SW X 08 JIC F-SW				
12	3	258141	HOSE, 3/8-2WB X 30 1/2 LOA - 06 JIC F-SW X 06 JIC F-SW				
13	1	401077-2	ASSY, HOSE - 1/2-2WB X 76 LOA - C/W FITTINGS				
14	2	258154	HOSE, 3/8-2WB X 31 LOA - 06 JIC F-SW X 08 JIC F-SW				
15	1	258137	HOSE, 1/2-2WB X 48LOA - 08JIC F-SW X 08JIC F-SW				
16	2	258441	HOSE, 1/2-2WB X 76 LOA - 08 JIC F-SW X 08 JIC F-SW				
17	1	258050	CONNECTOR, 08 ORB M X 08 JIC M				
18	1	258385	CONNECTOR, 06 ORB M X 08 JIC M				
19	1	258020	TEE, 08 JIC F-SW X 08 JIC M X 08 JIC M - RUN				
21	1	257993	CONNECTOR, 06 ORB M X 08 JIC F-SW				
A	2	258092	GAUGE, PRESSURE - SPG-63-1500-S-U - GLYCERINE FILLED				
B	2	260717	MOTOR, HYD - OMNISEED - 7/8 HEX - RAVEN				
C	2	260718	VALVE, PWM - OMNISEED - C/W MANIFOLD - RAVEN				
D	1	258611	FILTER, INLINE-ARROW 9152V-25 VITON SEAL-06 ORB				
E	3	257999	VALVE, CHECK - INLINE - 08 JIC M X F - VONBERG				

Meter Drive Hydraulic Schematic T/B Nova - 3 Tanks
Part Number: 401246-6

NOTE: LETTERED COMPONENTS ARE PICKED SEPARATELY FROM HYDRAULIC KIT

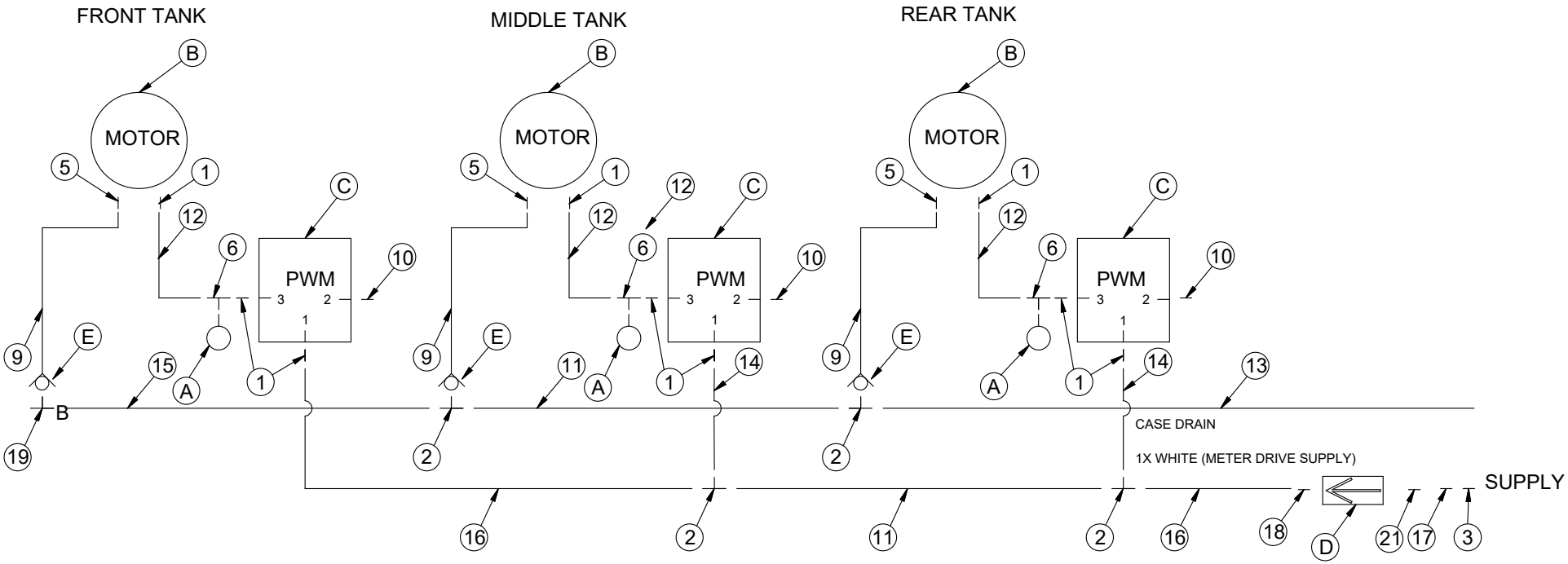

Hydraulic Lids Schematic - Single Shoot

Item	Qty.	Part No.	Description	Item	Qty.	Part No.	Description
1	2	258569	HOSE, 3/8-2WB X 90LOA - 08JIC F-SW X 06JIC F-SW				
2	2	257998	CONNECTOR, 10 ORB M X 12 JIC M				
3	2	258457	HOSE, 3/8-2WB X 203LOA - 06JIC F-SW X 06JIC F-SW				
4	1	258107	HOSE, 3/8-2WB X 87LOA - 06JIC F-SW X 06JIC F-SW				
5	1	258191	HOSE, 3/8-2WB X 75LOA - 06JIC F-SW X 06JIC F-SW				
6	1	258165	HOSE, 3/8-2WB X 96LOA - 06 JIC F-SW X 06 JIC F-SW				
7	8	258005	EL, 90D - 06 JIC M X 06 JIC F-SW				
8	2	258053	CONNECTOR, 08 ORB M X 06 JIC M				
9	3	258024	TEE, 06 JIC M X 06 JIC M X 06 JIC M				
10	1	257986	CONNECTOR, 06 JIC M X 06 JIC F - .020 ORIFICE				
11	1	258026	TEE, 06 JIC M X 06 JIC M X 06 JIC F-SW - BRANCH				
12	1	258124	HOSE, 3/8-2WB X 79 LOA - 06JIC F-SW X 06 JIC F-SW				
A	1	258089	VALVE, CHECK - INLINE - 06 JIC M X F - VONBERG				

Hydraulic Lids Schematic - Single Shoot
Part Number: 401229-4

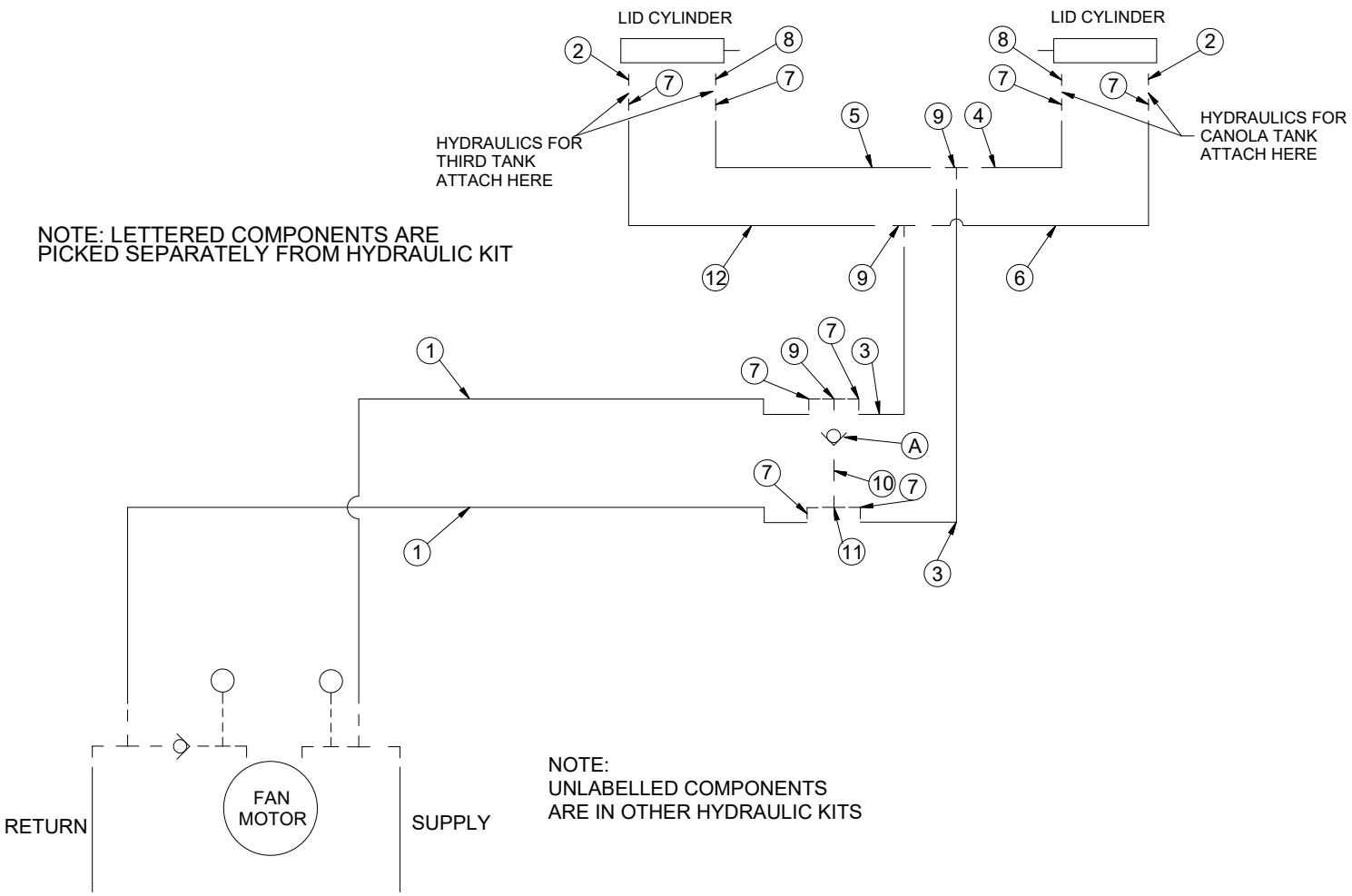

Hydraulic Lids Schematic - Dual Shoot

Item	Qty.	Part No.	Description	Item	Qty.	Part No.	Description
1	4	258569	HOSE, 3/8-2WB X 90LOA - 08JIC F-SW X 06JIC F-SW				
2	2	258457	HOSE, 3/8-2WB X 203LOA - 06JIC F-SW X 06JIC F-SW				
3	1	258107	HOSE, 3/8-2WB X 87LOA - 06JIC F-SW X 06JIC F-SW				
4	8	258053	CONNECTOR, 08 ORB M X 06 JIC M				
5	10	258005	EL, 90D - 06 JIC M X 06 JIC F-SW				
6	2	258024	TEE, 06 JIC M X 06 JIC M X 06 JIC M				
7	2	257998	CONNECTOR, 10 ORB M X 12 JIC M				
8	1	258165	HOSE, 3/8-2WB X 96LOA - 06 JIC F-SW X 06 JIC F-SW				
9	1	258191	HOSE, 3/8-2WB X 75LOA - 06JIC F-SW X 06JIC F-SW				
10	1	258124	HOSE, 3/8-2WB X 79 LOA - 06JIC F-SW X 06 JIC F-SW				
A	1	258214	MANIFOLD, HYD - AUTO LID PRESSURE SELECTOR- JEM				

Hydraulic Lids Schematic - Dual Shoot
Part Number: 401230-9

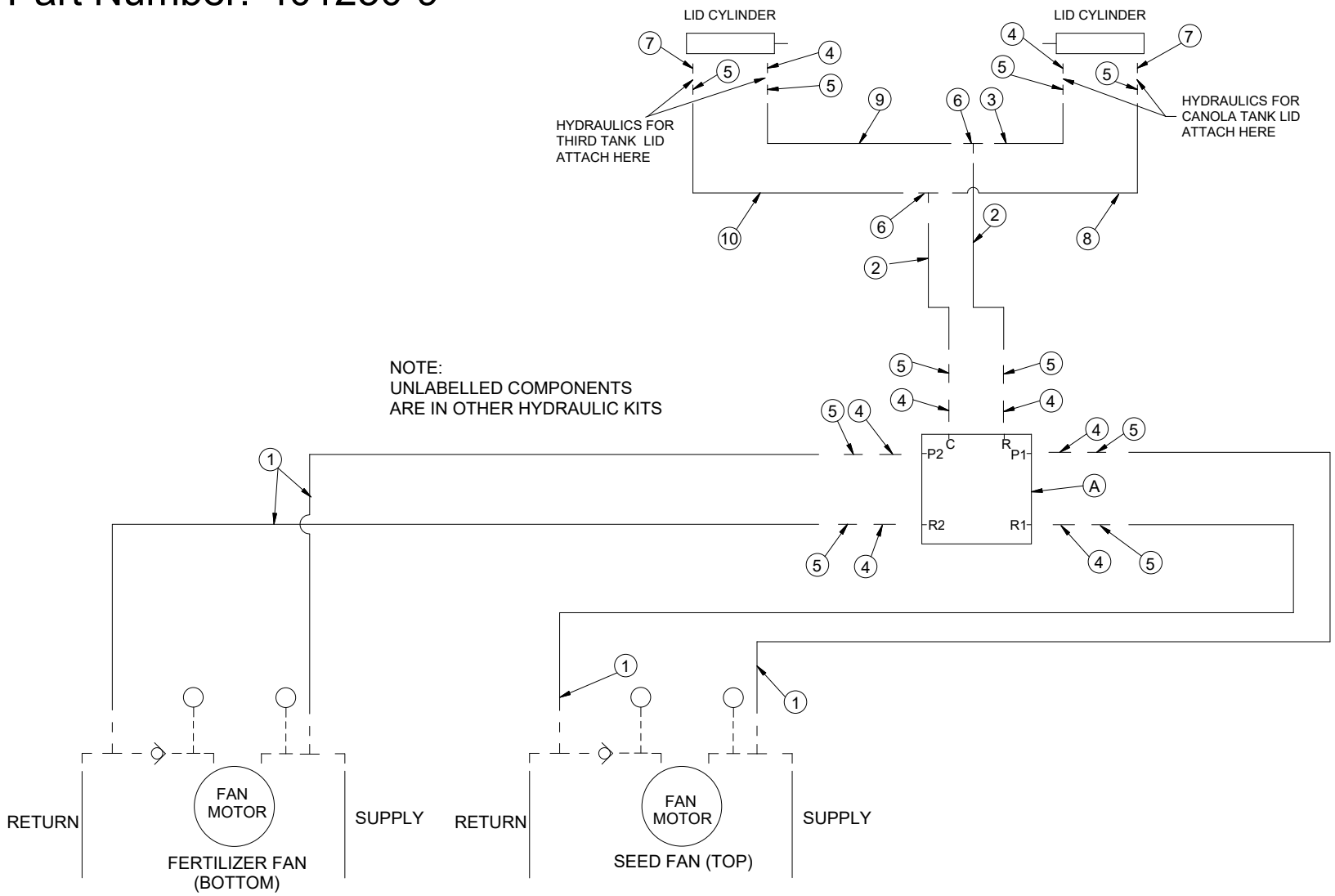

Hydraulic Lids Schematic + 1 Tank

Item	Qty.	Part No.	Description	Item	Qty.	Part No.	Description
1	2	258114	HOSE, 3/8-2WB X 107LOA - 06JIC F-SW X 06JIC F-SW				
2	1	258053	CONNECTOR, 08 ORB M X 06 JIC M				
3	1	257998	CONNECTOR, 10 ORB M X 12 JIC M				
4	2	258024	TEE, 06 JIC M X 06 JIC M X 06 JIC M				
5	2	258005	EL, 90D - 06 JIC M X 06 JIC F-SW				
6	2	258228	HOSE, 3/8-2WB X 20 LOA - 06 JIC F-SW X 06 JIC F-SW				

Hydraulic Lids Schematic + 1 Tank
Part Number: 401231-4

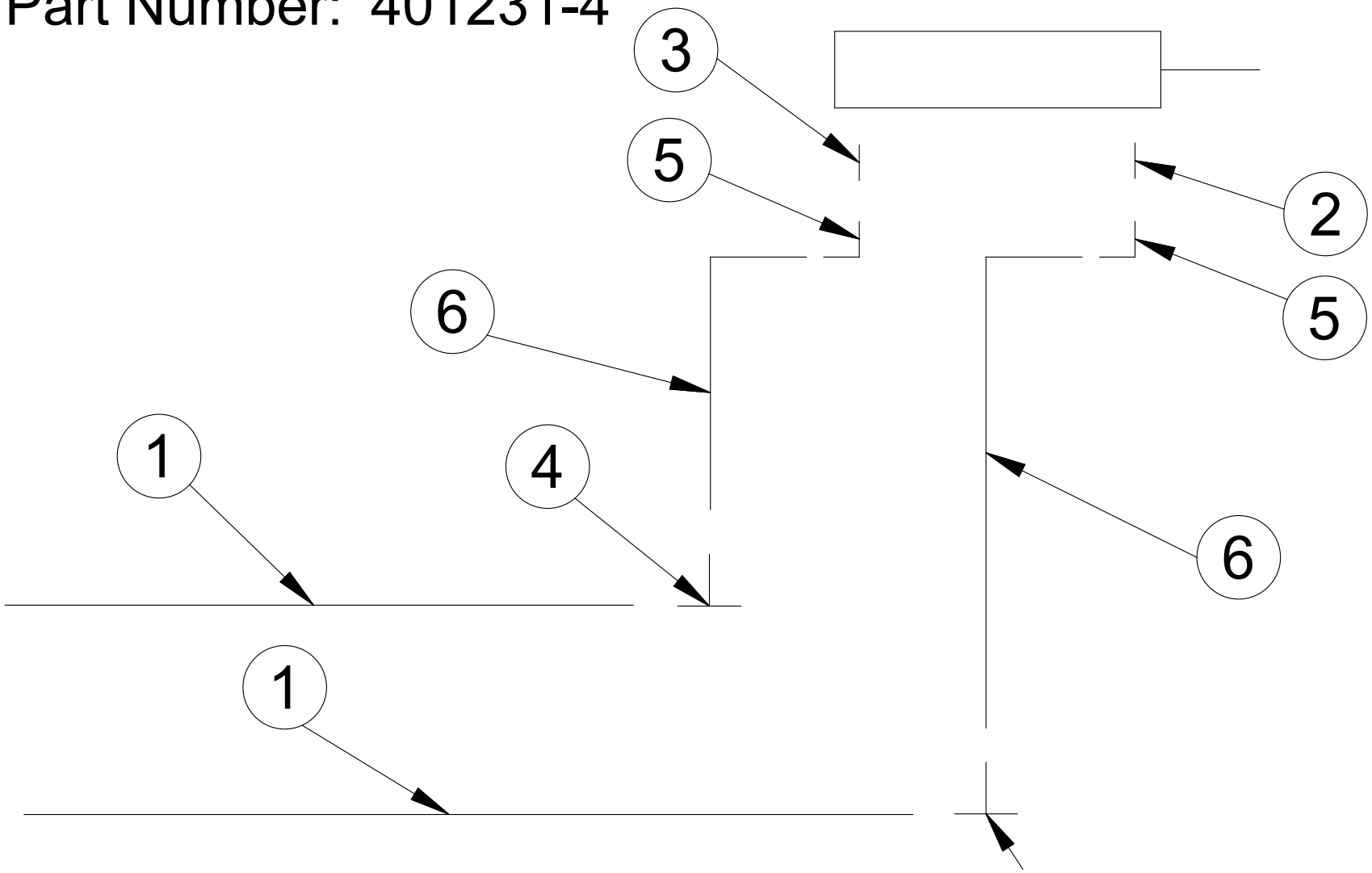

Hydraulic Lids Schematic - Canola Tank

Item	Qty.	Part No.	Description	Item	Qty.	Part No.	Description
1	2	258189	HOSE, 3/8-2WB X 66 LOA - 06 JIC F-SW X 06 JIC F-SW				
2	2	258228	HOSE, 3/8-2WB X 20 LOA - 06 JIC F-SW X 06 JIC F-SW				
3	1	257998	CONNECTOR, 10 ORB M X 12 JIC M				
4	2	258005	EL, 90D - 06 JIC M X 06 JIC F-SW				
5	2	256026	TEE, 06 JIC M X 06 JIC M X 06 JIC F-SW - BRANCH				
6	1	258053	CONNECTOR, 08 ORB M X 06 JIC M				

Hydraulic Lids Schematic - Canola Tank
Part Number: 401240-3

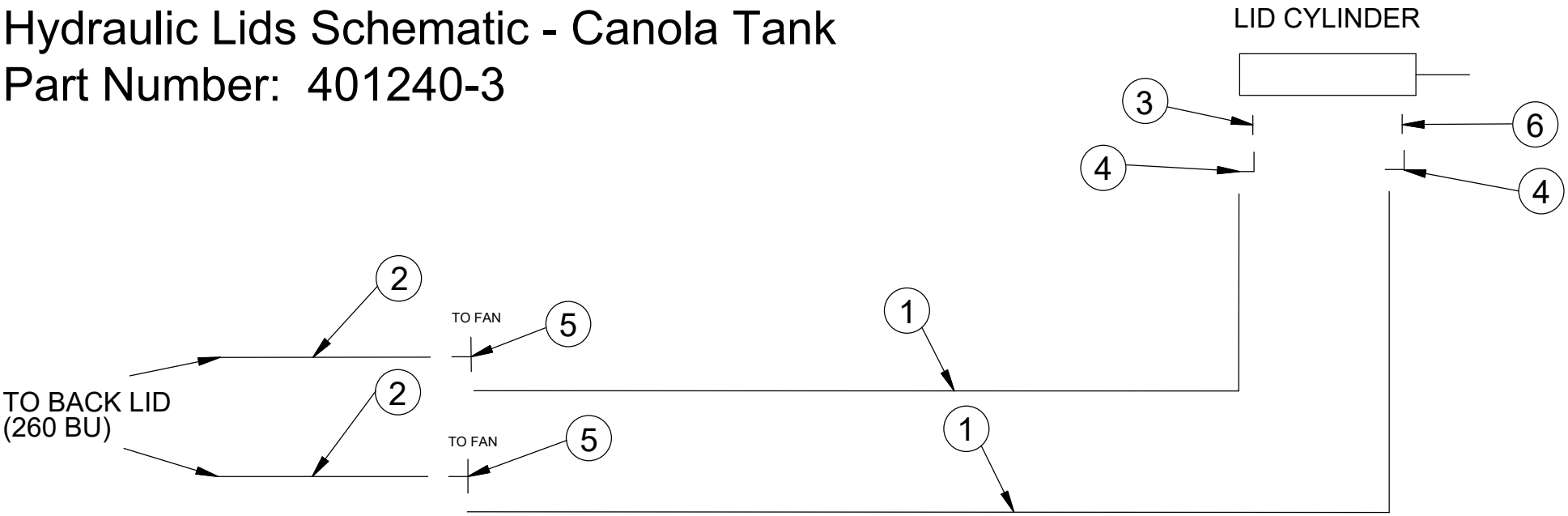

Hydraulic Lids Schematic - 110 BU Tank - T/B Nova

Item	Qty.	Part No.	Description	Item	Qty.	Part No.	Description
1	2	258285	HOSE, 3/8-2WB X 42 LOA - 06 JIC F-SW X 06 JIC F-SW				
2	4	258024	TEE, 06 JIC M X 06 JIC M X 06 JIC M				
3	2	258005	EL, 90D - 06 JIC M X 06 JIC F-SW				
4	2	257998	CONNECTOR, 10 ORB M X 12 JIC M				
5	2	258053	CONNECTOR, 08 ORB M X 06 JIC M				
6	4	258111	HOSE, 3/8-2WB X 16 1/2LOA - 06JIC F-SW X 06JIC F-SW				
7	2	258134	HOSE, 3/8-2WB X 54 LOA - 06JIC F-SW X 06JIC F-SW				

Hydraulic Lids Schematic - 110 BU Tank - T/B Nova
Part Number: 401242

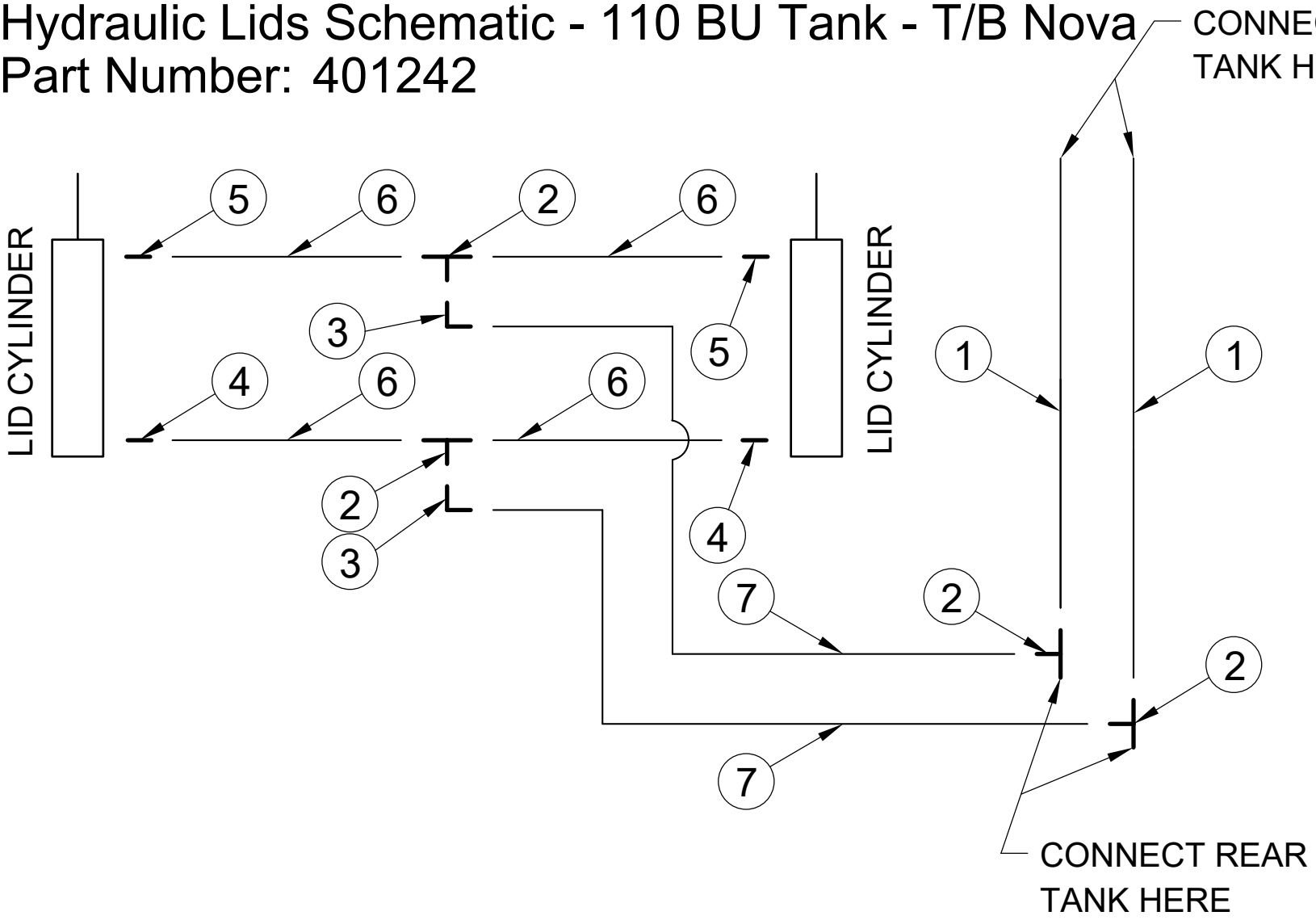

Dual Fans Hydraulic Schematic

Item	Qty.	Part No.	Description	Item	Qty.	Part No.	Description
1	4	258246-1	HOSE, 3/4-2WB X 488LOA - 12 JIC F-SW X 12 ORB M				
1	4	258275-1	HOSE, 3/4-2WB X 575LOA - 12 JIC F-SW X 12 ORB M				
1	4	258343-1	HOSE, 3/4-2WB X 623LOA - 12 JIC F-SW X 12 ORB M				
1	4	258344-1	HOSE, 3/4-2WB X 536LOA - 12 JIC F-SW X 12 ORB M				
2	1	258247	HOSE, 1/2-2WB X 452LOA-06 JIC F-SW X 06 JIC F-SW				
2	1	258278	HOSE, 1/2-2WB X 539LOA-06 JIC F-SW X 1/2 NPT M				
2	1	258345	HOSE, 1/2-2WB X 58LOA-06 JIC F-SW X 06 JIC F-SW				
2	1	258346	HOSE, 1/2-2WB X 500LOA-06 JIC F-SW X 06 JIC F-SW				
3	2	258279	HOSE, CASE DRAIN - G102R-06X 36LOA-06 JIC F-SW				
4	2	258005	EL, 90D - 06 JIC M X 06 JIC F-SW				
5	1	258048	CONNECTOR, 1/2 NPT M X 06 JIC M				
6	1	258073	COUPLER, FEMALE - NON-VALVED - 1/2 NPT F				
7	1	258024	TEE, 06 JIC M X 06 JIC M X 06 JIC M				
8	4	258084	CONNECTOR - 12 JIC F-SW X 08 JIC M				
9	2	258002	EL, 90D - 06 JIC M X 06 ORB M				
10	4	258003	EL, 90D - 12 JIC M X 10 ORB M				
11	4	258033	TEE, 12 JIC F-SW X 12 JIC M X 12 JIC M - RUN				
12	4	257987	EL, 90D - 12 JIC M X 12 JIC F-SW				
13	2	258052	CONNECTOR, 12 ORBM X 12 JIC M				
14	2	257996	CONNECTOR, 12 ORB M X 12 JIC F-SW				
15	4	258652	TEE, 12 JIC F-SW X 12 JIC M X 12 JIC M X 04 ORB F				
A	2	258089	VALVE, CHECK - INLINE - 06 JIC M X F - VONBERG				
B	4	257970	COUPLER, MALE - STUCCHI - 12 ORB F				
C	2	258092	GAUGE, PRESSURE - SPG-63-1500-S-U - GLYCERINE FILLED				
D	2	258093	GAUGE, PRESSURE - SPG-63-3000-S-U - GLYCERINE				
E	2	258087	VALVE, CHECK - 12 ORB F				

Dual Fans Hydraulic Schematic

Part Number: 401237-6 - 780 Nova
401253-2 - 820 Nova
401239-4 - 520 Nova
401251-2 - 560 Nova

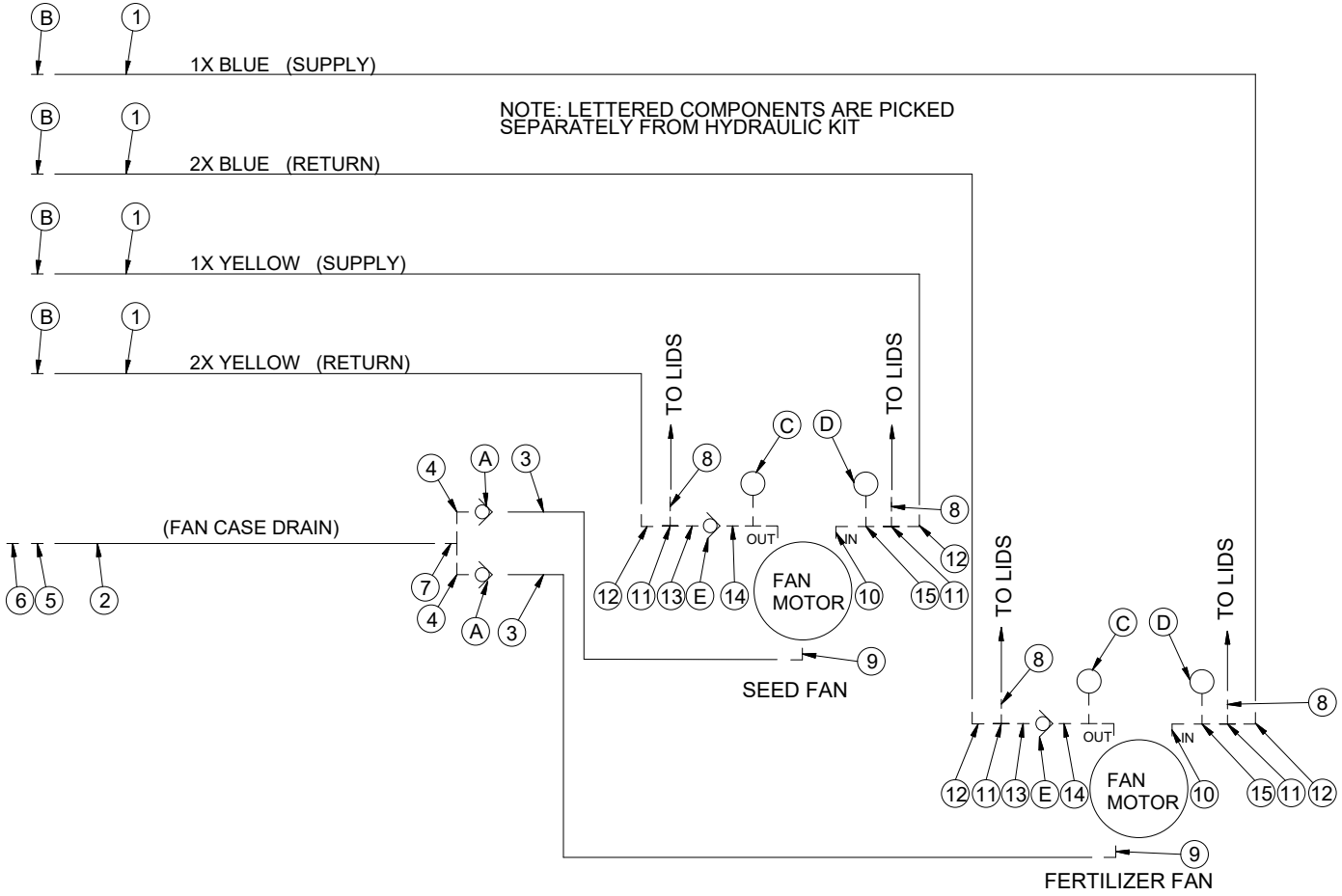

Single Fan Hydraulic Schematic

Item	Qty.	Part No.	Description	Item	Qty.	Part No.	Description
1	2	258246-1	HOSE, 3/4-2WB X 488LOA - 12 JIC F-SW X 12 ORB M				
1	2	258275-1	HOSE, 3/4-2WB X 575LOA - 12 JIC F-SW X 12 ORB M				
1	2	258343-1	HOSE, 3/4-2WB X 623LOA - 12 JIC F-SW X 12 ORB M				
1	2	258344-1	HOSE, 3/4-2WB X 536LOA - 12 JIC F-SW X 12 ORB M				
2	1	258247	HOSE, 1/2-2WB X 452LOA-06 JIC F-SW X 06 JIC F-SW				
2	1	258278	HOSE, 1/2-2WB X 539LOA-06 JIC F-SW X 1/2 NPT M				
2	1	258345	HOSE, 1/2-2WB X 58LOA-06 JIC F-SW X 06 JIC F-SW				
2	1	258346	HOSE, 1/2-2WB X 500LOA-06 JIC F-SW X 06 JIC F-SW				
3	1	258279	HOSE, CASE DRAIN - G102R-06X 36LOA-06 JIC F-SW				
4	1	258048	CONNECTOR, 1/2 NPT M X 06 JIC M				
5	1	258073	COUPLER, FEMALE - NON-VALVED - 1/2 NPT F				
6	1	258063	UNION, 06 JIC M X 06 JIC M				
7	1	258002	EL, 90D - 06 JIC M X 06 ORB M				
8	2	258003	EL, 90D - 12 JIC M X 10 ORB M				
9	2	258033	TEE, 12 JIC F-SW X 12 JIC M X 12 JIC M - RUN				
10	2	258084	CONNECTOR - 12 JIC F-SW X 08 JIC M				
11	2	257987	EL, 90D - 12 JIC M X 12 JIC F-SW				
12	1	258052	CONNECTOR, 12 ORBM X 12 JIC M				
13	1	257996	CONNECTOR, 12 ORB M X 12 JIC F-SW				
14	2	258652	TEE, 12 JIC F-SW X 12 JIC M X 12 JIC M X 04 ORB F				
A	2	257970	COUPLER, MALE - STUCCHI - 12 ORB F				
B	1	258089	VALVE, CHECK - INLINE - 06 JIC M X F - VONBERG				
C	1	258094	GAUGE, PRESSURE - SPG-1500P 1/4 NPT				
D	1	258095	GAUGE, PRESSURE - SPG-3000P 1/4 NPT				
E	1	258087	VALVE, CHECK - 12 ORB F				

SEED MASTER™

Hydraulic Schematic Single Fan

Part Number: 401236-5 - 780 Nova
401252-2 - 820 Nova
401238-4 - 520 Nova
401250-2 - 560 Nova

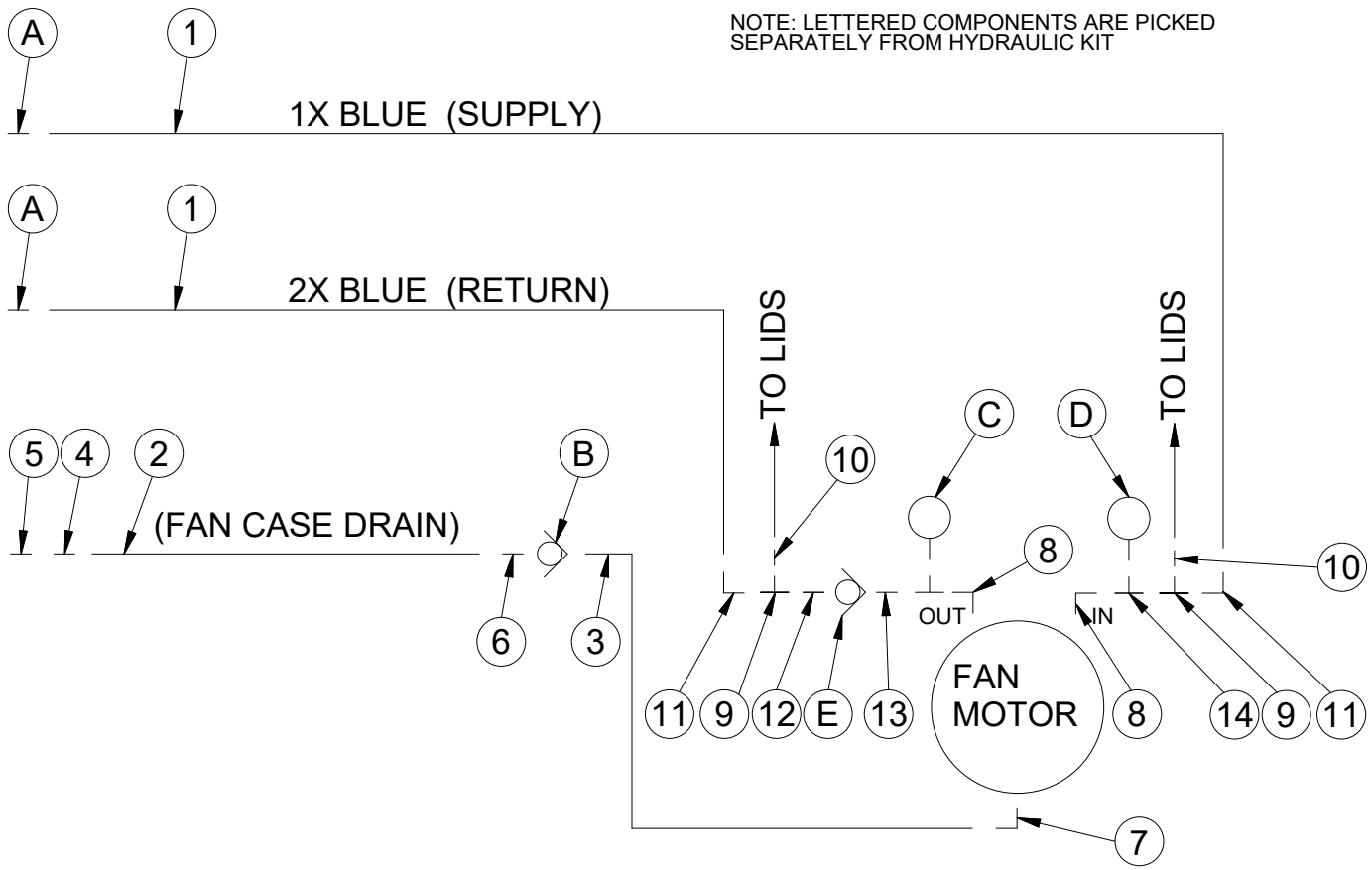

Dual Fans Hydraulic Schematic - T/B Nova

Item	Qty.	Part No.	Description	Item	Qty.	Part No.	Description
D	2	258087	VALVE, CHECK - 12 ORB F				
A	2	258089	VALVE, CHECK - INLINE - 06 JIC M X F - VONBERG				
B	2	258092	GAUGE, PRESSURE - SPG-63-1500-S-U - GLYCERINE FILLED				
C	2	258093	GAUGE, PRESSURE - SPG-63-3000-S-U - GLYCERINE				
1	2	401078	ASSY, HOSE - 3/4-2WB X 288 LOA - C/W FITTINGS				
2	1	258116	HOSE, 3/8-2WB X 58 LOA - 06JIC F-SW X 06 JIC F-SW				
3	2	258279	HOSE, CASE DRAIN - G102R-06X 36LOA-06 JIC F-SW				
4	2	258005	EL, 90D - 06 JIC M X 06 JIC F-SW				
5	1	258024	TEE, 06 JIC M X 06 JIC M X 06 JIC M				
6	1	258049	CONNECTOR, 08 JIC F X 06 JIC M				
7	2	258002	EL, 90D - 06 JIC M X 06 ORB M				
8	4	258003	EL, 90D - 12 JIC M X 10 ORB M				
9	1	258028	TEE, 08 JIC M X M X M				
10	1	401270	ASSY, HOSE - 1/2-2WB X 236LOA - C/W FITTINGS				
11	4	258084	CONNECTOR - 12 JIC F-SW X 08 JIC M				
12	4	257987	EL, 90D - 12 JIC M X 12 JIC F-SW				
13	4	258652	TEE, 12 JIC F-SW X 12 JIC M X 12 JIC M X 04 ORB F				
14	2	257996	CONNECTOR, 12 ORB M X 12 JIC F-SW				
15	2	258052	CONNECTOR, 12 ORBM X 12 JIC M				
16	2	401074	ASSY, HOSE - 3/4-2WB X 328 LOA - C/W FITTINGS				
17	4	258033	TEE, 12 JIC F-SW X 12 JIC M X 12 JIC M - RUN				

Dual Fans Hydraulic Schematic - T/B Nova

Part Number: 401244-4

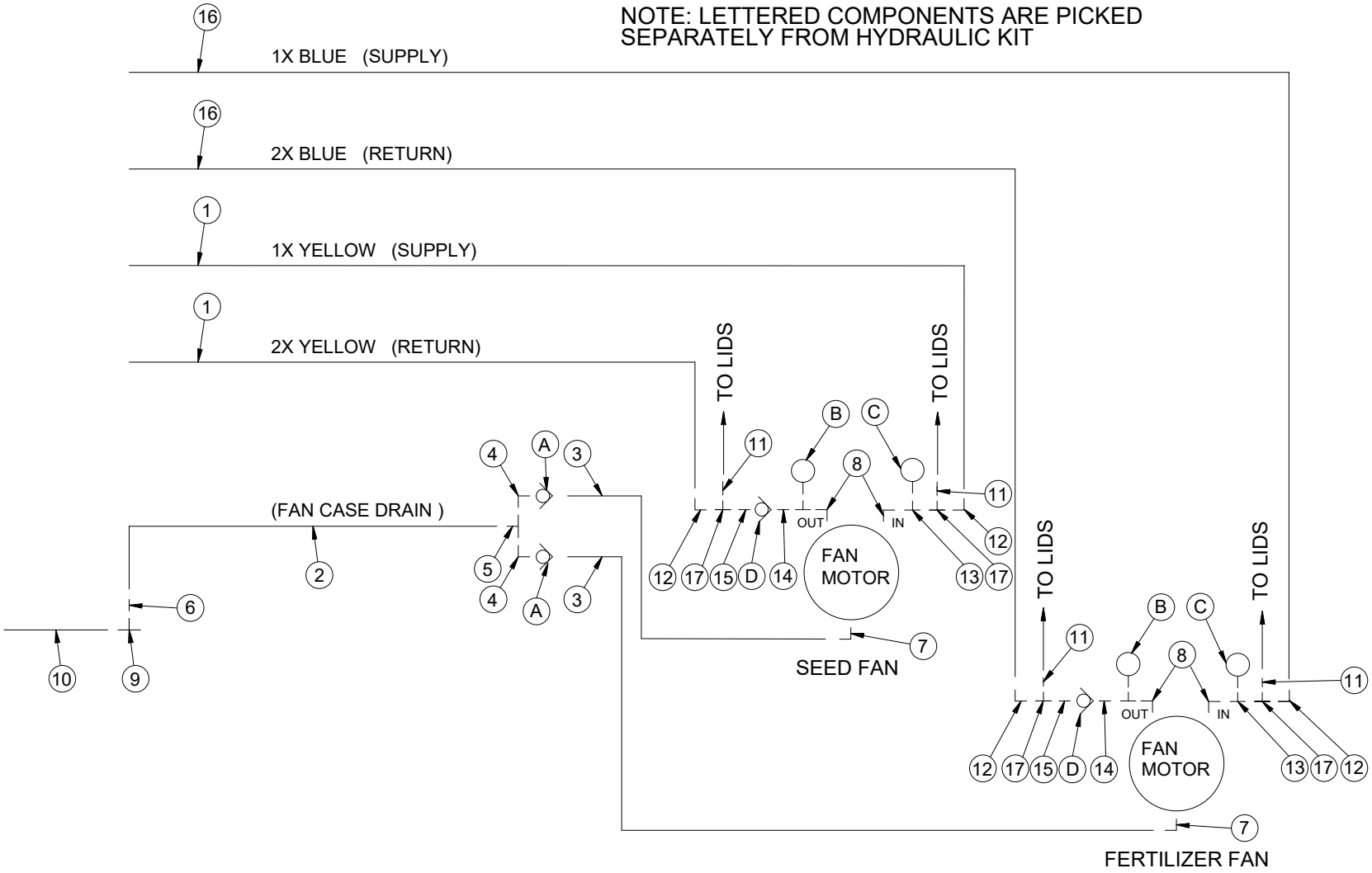

Single Fan Hydraulic Schematic - T/B Nova

Item	Qty.	Part No.	Description	Item	Qty.	Part No.	Description
D	1	258087	VALVE, CHECK - 12 ORB F				
A	1	258089	VALVE, CHECK - INLINE - 06 JIC M X F - VONBERG				
B	1	258092	GAUGE, PRESSURE - SPG-63-1500-S-U - GLYCERINE FILLED				
C	1	258093	GAUGE, PRESSURE - SPG-63-3000-S-U - GLYCERINE				
1	2	401078	ASSY, HOSE - 3/4-2WB X 288 LOA - C/W FITTINGS				
2	1	258116	HOSE, 3/8-2WB X 58 LOA - 06JIC F-SW X 06 JIC F-SW				
3	1	258279	HOSE, CASE DRAIN - G102R-06X 36LOA-06 JIC F-SW				
4	1	258049	CONNECTOR, 08 JIC F X 06 JIC M				
5	1	258028	TEE, 08 JIC M X M X M				
6	1	258063	UNION, 06 JIC M X 06 JIC M				
7	1	258002	EL, 90D - 06 JIC M X 06 ORB M				
8	2	258003	EL, 90D - 12 JIC M X 10 ORB M				
9	2	258084	CONNECTOR - 12 JIC F-SW X 08 JIC M				
10	1	401270	ASSY, HOSE - 1/2-2WB X 236LOA - C/W FITTINGS				
11	2	257987	EL, 90D - 12 JIC M X 12 JIC F-SW				
12	1	258052	CONNECTOR, 12 ORBM X 12 JIC M				
13	1	257996	CONNECTOR, 12 ORB M X 12 JIC F-SW				
14	2	258033	TEE, 12 JIC F-SW X 12 JIC M X 12 JIC M - RUN				
15	2	258652	TEE, 12 JIC F-SW X 12 JIC M X 12 JIC M X 04 ORB F				

Single Fan Hydraulic Schematic - T/B Nova

Part Number: 401245-4

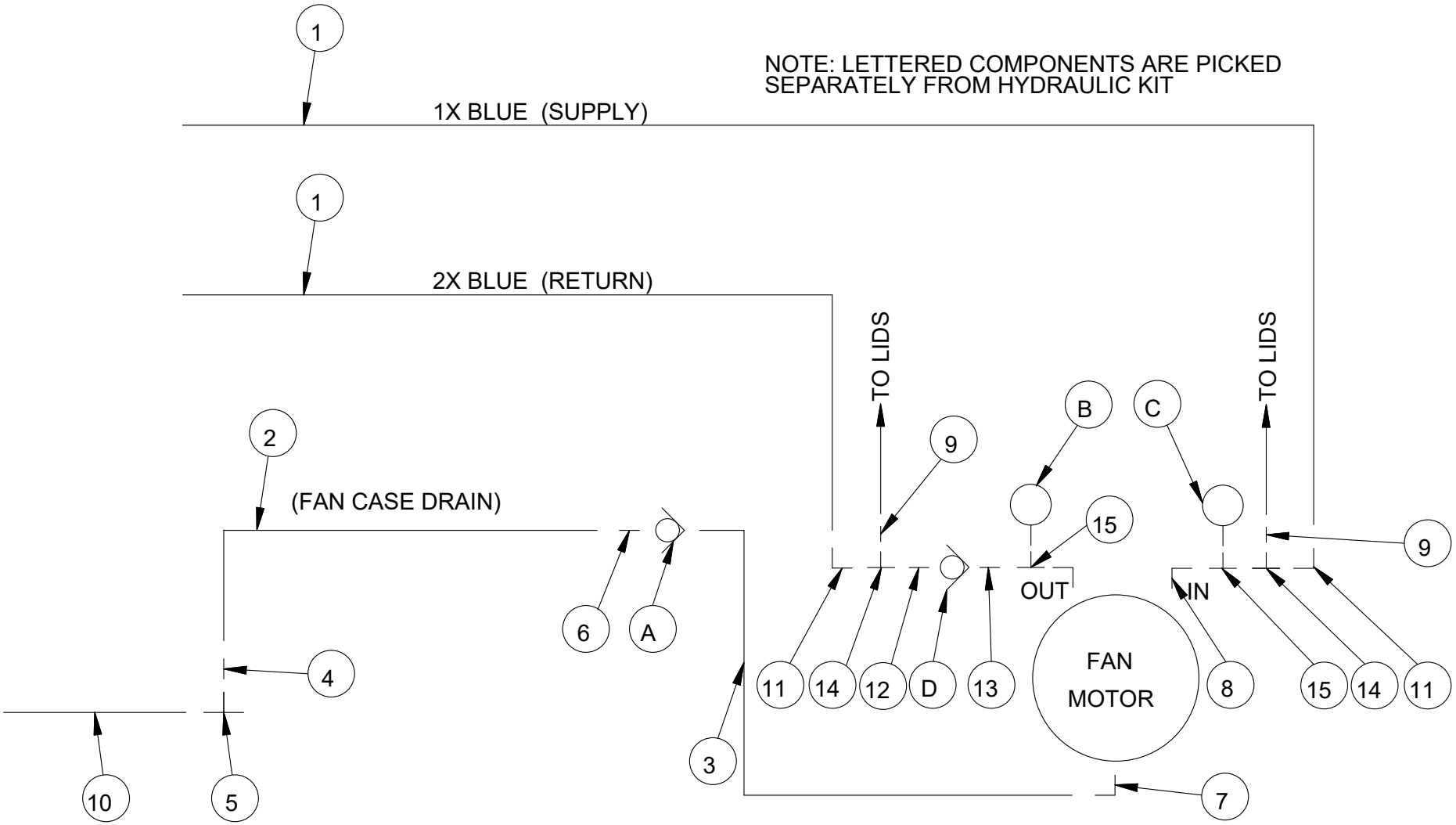

Long Conveyor Hydraulic Schematic 780/820 Nova

Item	Qty.	Part No.	Description
1	2	258287-1	HOSE, 3/4-2WB X 244 LOA - 12 JIC F-SW X 12 JIC-F-SW
2	1	258288-3	HOSE, 3/4-2WB X 228 LOA - 12 JIC F-SW X 12 JIC-F-SW
3	1	258574	HOSE, 3/4-2WB X 52 LOA - 12 JIC F-SW X 12 JIC-F-SW
4	1	258376	HOSE, 3/4-2WB X 24 LOA - 12 JIC M X 12 JIC- F- SW
5	1	258573-1	HOSE, 3/4-2WB X 270 LOA - 12 JIC F-SW X 12 JIC-F-SW
6	1	258296-2	HOSE, 1/4-2WB X 210 LOA - 06 JIC F-SW X 06 JIC F- SW
7	2	258571	HOSE, 1/4-2WB X 210 LOA - 06 JIC M X 06 JIC F-SW
8	1	258570	HOSE, 3/4-2WB X 226 LOA - 12 JIC M X 12 JIC- F- SW
9	1	258427	HOSE, 3/4-112-12 X 402 LOA - 12 JIC F-SW X 12 JIC- F- SW
10	1	258576	HOSE, 3/4-112-12 X 210 LOA - 12 JIC F-SW X 12 JIC- F- SW
11	2	258377-1	HOSE, 1/4-2WB X 45 LOA - 06 JIC F-SW X 06 JIC F- SW
12	1	258423	HOSE, 1/4-2WB X 54 LOA - 06 JIC F-SW X 06 JIC F- SW
13	1	258424	HOSE, 1/4-2WB X 79 LOA - 06 JIC F-SW X 06 JIC F- SW
14	1	258572-1	HOSE, 1/4-2WB X 150 LOA - 06 JIC F-SW X 06 JIC F- SW
15	1	258575-1	HOSE, 1/4-2WB X 174 LOA - 06 JIC F-SW X 06 JIC F- SW
16	4	258378-1	HOSE, 1/4-2WB X 272 LOA - 06 JIC F-SW X 06 JIC F- SW
17	1	258425	HOSE, 1/4-2WB X 30 LOA - 06 JIC M X 06 JIC- F- SW
18	1	258428	HOSE, 1/4-2WB X 23 LOA - 06 JIC M X 06 JIC- F- SW
19	3	257989	CONNECTOR, 12 JIC F X 06 JIC M
20	3	257992	CONNECTOR, 10 ORB M X 06 JIC M
21	2	257996	CONNECTOR, 12 ORB M X 12 JIC F-SW
22	6	258002	EL, 90D - 06 JIC M X 06 ORB M
23	8	258005	EL, 90D - 06 JIC M X 06 JIC F-SW
24	1	258012	EL, 90D - 12 JIC M X 12 ORB M
25	3	258018	TEE, 12 JIC M X 12 JIC M X 12 JIC M
26	2	257986	CONNECTOR, 06 JIC M X 06 JIC F - .020 ORIFICE
27	2	258033	TEE, 12 JIC F-SW X 12 JIC M X 12 JIC M - RUN
28	3	258052	CONNECTOR, 12 ORBM X 12 JIC M
29	6	258053	CONNECTOR, 08 ORB M X 06 JIC M
30	1	258004	EL, 90D - 06 JIC M X 04 ORB M
31	1	258058	CONNECTOR, 10 ORB M X 08 JIC M
32	3	258049	CONNECTOR, 08 JIC F X 06 JIC M
33	4	257976	CONNECTOR, 06 JIC M X 06 JIC F - .031 ORIFICE
34	4	257988	CONNECTOR, 10 ORB M X 12 JIC M
35	7	257987	EL, 90D - 12 JIC M X 12 JIC F-SW
A	2	258380	SWIVEL, 12 JIC M X 12 JIC F
B	4	258381	SWIVEL, 06 JIC M X 06 JIC F
C	1	258506	MANIFOLD, HYD - 4 VALVE D03 - CONVEYOR CONTROL
D	2	258501	VALVE, CHECK-POPPET - 1908F-08-0.098" - VONBERG
E	1	257350	VALVE, BALL - 12 ORB F X 12 ORB F - C/W HANDLE
F	1	258087	VALVE, CHECK - 12 ORB F
G	2	258510	CYL, HYD 3 X 24 IN - WING LIFT
H	1	258550	CYL, HYD 2 1/2 X 8 IN
I	1	258509	VALVE, CONVEYOR BELT ON/OFF CONTROL

Long Conveyor Hydraulic Schematic 780/820 Nova
Part Number: 401081-4

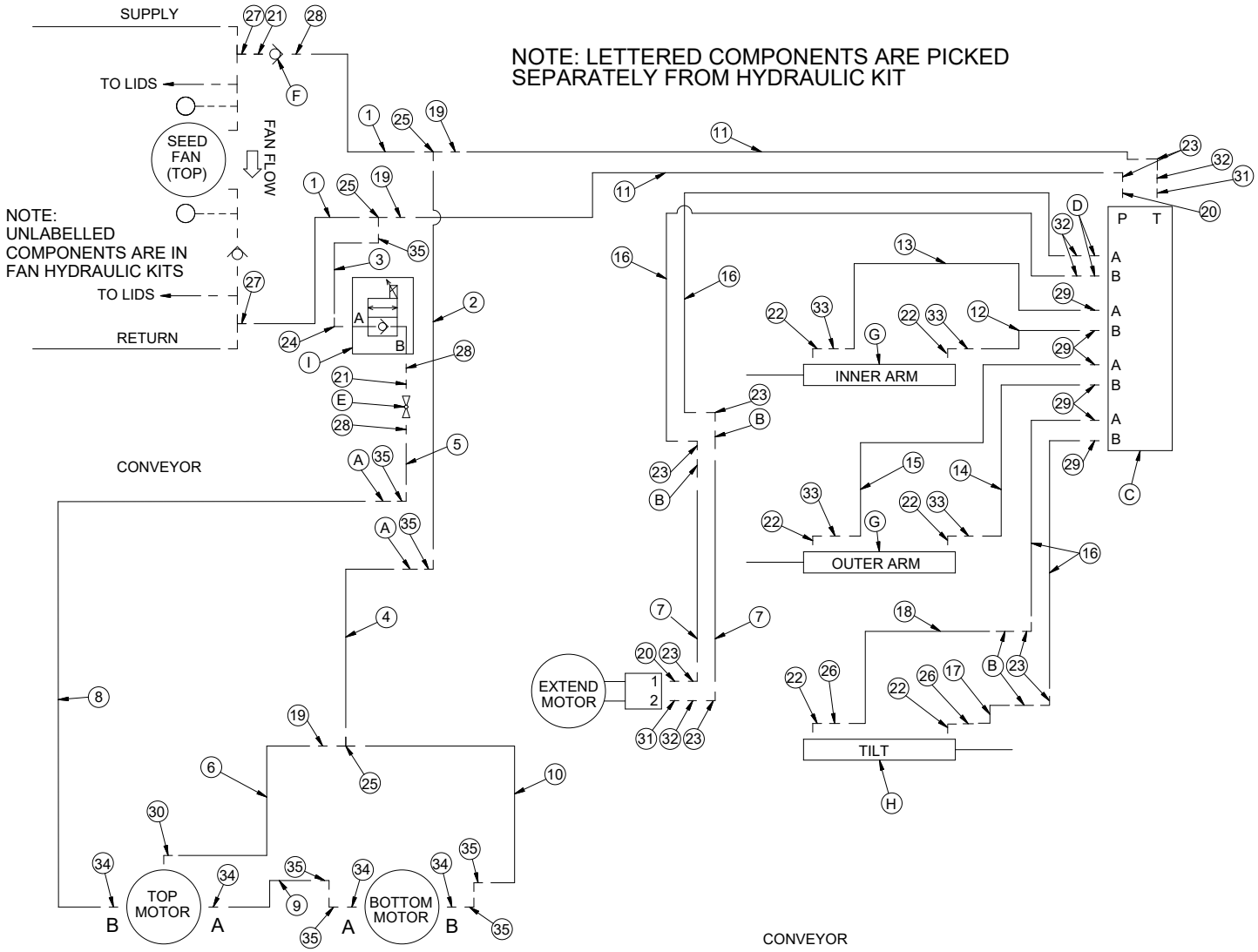

Short Conveyor Hydraulic Schematic 520/560/630 Nova

Item	Qty.	Part No.	Description
1	2	258287-1	HOSE, 3/4-2WB X 244 LOA - 12 JIC F-SW X 12 JIC-F-SW
2	1	258291-2	HOSE, 3/4-2WB X 178 LOA - 12 JIC F-SW X 12 JIC-F-SW
3	1	258574	HOSE, 3/4-2WB X 52 LOA - 12 JIC F-SW X 12 JIC-F-SW
4	1	258376	HOSE, 3/4-2WB X 24 LOA - 12 JIC M X 12 JIC- F- SW
5	1	258598	HOSE, 3/4-2WB X 220 LOA - 12 JIC F-SW X 12 JIC-F-SW
6	1	258319-1	HOSE, 1/4-2WB X 186 LOA - 06 JIC F-SW X 06 JIC F- SW
7	2	258599	HOSE, 1/4-2WB X 194 LOA - 06 JIC M X 06 JIC F-SW
8	1	258370-2	HOSE, 3/4-2WB X 190 LOA - 12 JIC M X 12 JIC- F- SW
9	1	258433	HOSE, 3/4-112-12 X 366 LOA - 12 JIC F-SW X 12 JIC- F- SW
10	1	258426-1	HOSE, 3/4-112-12 X 194 LOA - 12 JIC F-SW X 12 JIC- F- SW
11	2	258620	HOSE, 1/4-2WB X 56 LOA - 06 JIC F-SW X 06 JIC F- SW
12	1	258423	HOSE, 1/4-2WB X 54 LOA - 06 JIC F-SW X 06 JIC F- SW
13	1	258424	HOSE, 1/4-2WB X 79 LOA - 06 JIC F-SW X 06 JIC F- SW
14	1	258434	HOSE, 1/4-2WB X 136 LOA - 06 JIC F-SW X 06 JIC F- SW
15	1	258435	HOSE, 1/4-2WB X 160 LOA - 06 JIC F-SW X 06 JIC F- SW
16	4	258436-1	HOSE, 1/4-2WB X 222 LOA - 06 JIC F-SW X 06 JIC F- SW
17	1	258437	HOSE, 1/4-2WB X 26 LOA - 06 JIC M X 06 JIC- F- SW
18	1	258438	HOSE, 1/4-2WB X 18 LOA - 06 JIC M X 06 JIC- F- SW
19	3	257989	CONNECTOR, 12 JIC F X 06 JIC M
20	3	257992	CONNECTOR, 10 ORB M X 06 JIC M
21	2	257996	CONNECTOR, 12 ORB M X 12 JIC F-SW
22	6	258002	EL, 90D - 06 JIC M X 06 ORB M
23	8	258005	EL, 90D - 06 JIC M X 06 JIC F-SW
24	1	258012	EL, 90D - 12 JIC M X 12 ORB M
25	3	258018	TEE, 12 JIC M X 12 JIC M X 12 JIC M
26	2	257986	CONNECTOR, 06 JIC M X 06 JIC F - .020 ORIFICE
27	2	258033	TEE, 12 JIC F-SW X 12 JIC M X 12 JIC M - RUN
28	3	258052	CONNECTOR, 12 ORBM X 12 JIC M
29	6	258053	CONNECTOR, 08 ORB M X 06 JIC M
30	1	258004	EL, 90D - 06 JIC M X 04 ORB M
31	1	258058	CONNECTOR, 10 ORB M X 08 JIC M
32	3	258049	CONNECTOR, 08 JIC F X 06 JIC M
33	4	257976	CONNECTOR, 06 JIC M X 06 JIC F - .031 ORIFICE
34	4	257988	CONNECTOR, 10 ORB M X 12 JIC M
35	7	257987	EL, 90D - 12 JIC M X 12 JIC F-SW
A	2	258380	SWIVEL, 12 JIC M X 12 JIC F
B	4	258381	SWIVEL, 06 JIC M X 06 JIC F
C	1	258506	MANIFOLD, HYD - 4 VALVE D03 - CONVEYOR CONTROL
D	2	258501	VALVE, CHECK-POPPET - 1908F-08-0.098" - VONBERG
E	1	257350	VALVE, BALL - 12 ORB F X 12 ORB F - C/W HANDLE
F	1	258087	VALVE, CHECK - 12 ORB F
G	2	258510	CYL, HYD 3 X 24 IN - WING LIFT
H	1	258550	CYL, HYD 2 1/2 X 8 IN
I	1	258509	VALVE, CONVEYOR BELT ON/OFF CONTROL

Short Conveyor Hydraulic Schematic 520/560/630 Nova
Part Number: 401059-1

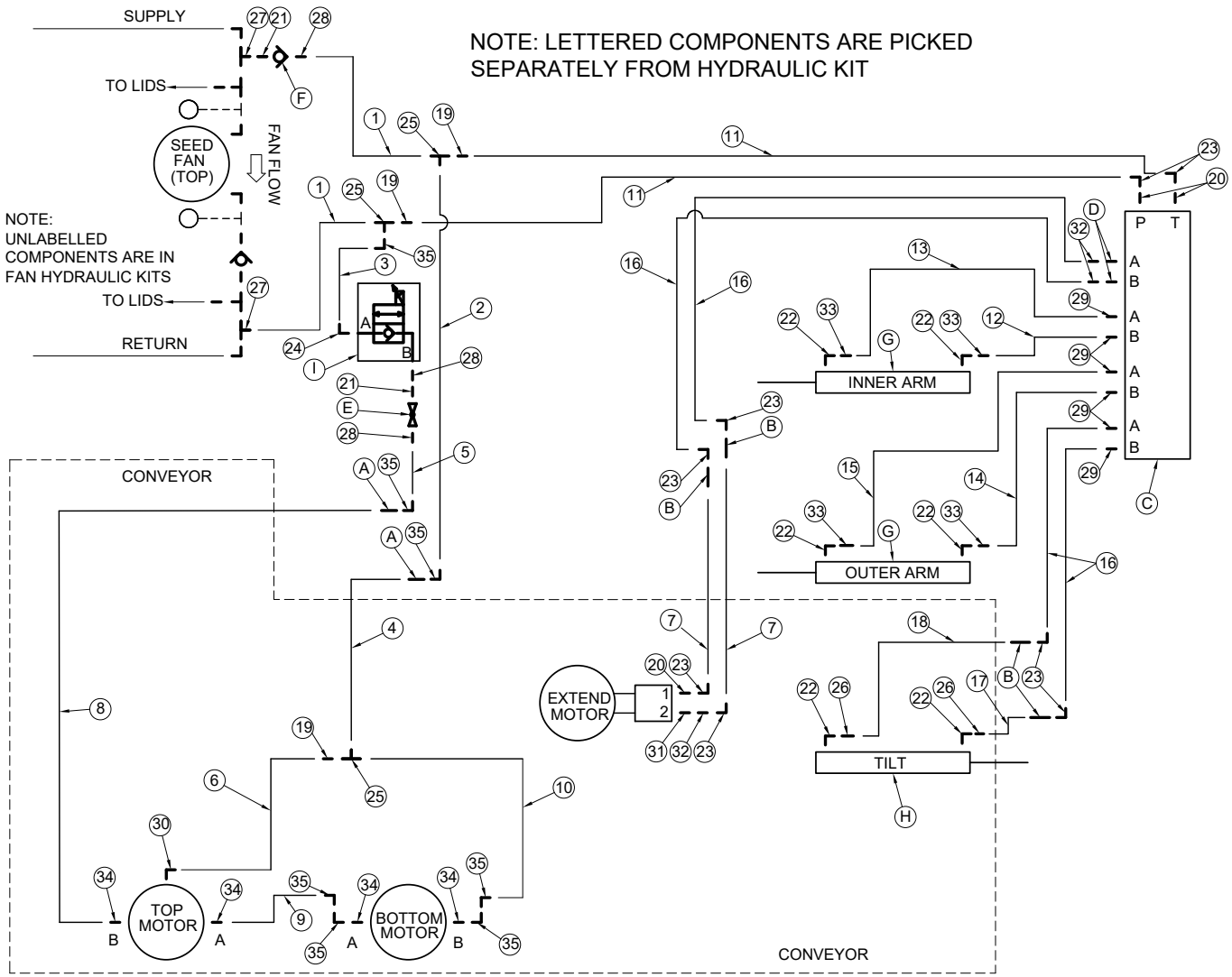

Transport Latch Hydraulic Schematic - Long Conveyor

Item	Qty.	Part No.	Description	Item	Qty.	Part No.	Description
1	3	258582	HOSE, 1/4-2WB X 145 LOA - 06 JIC F-SW X 06 JIC F-SW				
2	1	258581	HOSE, 1/4-2WB X 156 LOA - 06 JIC F-SW X 06 JIC F-SW				
3	1	258583	HOSE, 1/4-2WB X 22 LOA - 06 JIC F-SW X 06 JIC F-SW				
4	2	257998	CONNECTOR, 10 ORB M X 12 JIC M				
5	2	258053	CONNECTOR, 08 ORB M X 06 JIC M				
6	5	258025	TEE, 06 JIC F-SW X 06 JIC M X 06 JIC M - RUN				
7	4	258005	EL, 90D - 06 JIC M X 06 JIC F-SW				
8	1	258059	CONNECTOR, 06 ORB M X 06 JIC F-SW				
9	1	258051	CONNECTOR, 06 ORB M X 06 JIC M				
10	1	257975	CONNECTOR, 04 ORB M X 06 JIC M				
A	1	258503	VALVE, PILOT OPERATED CHECK - CKBBXEN-JCI				
B	2	258551	CYL, HYD 2 X 4 IN - FILL AUGER				

Transport Latch Hydraulic Schematic - Long Conveyor
Part Number: 401278-2

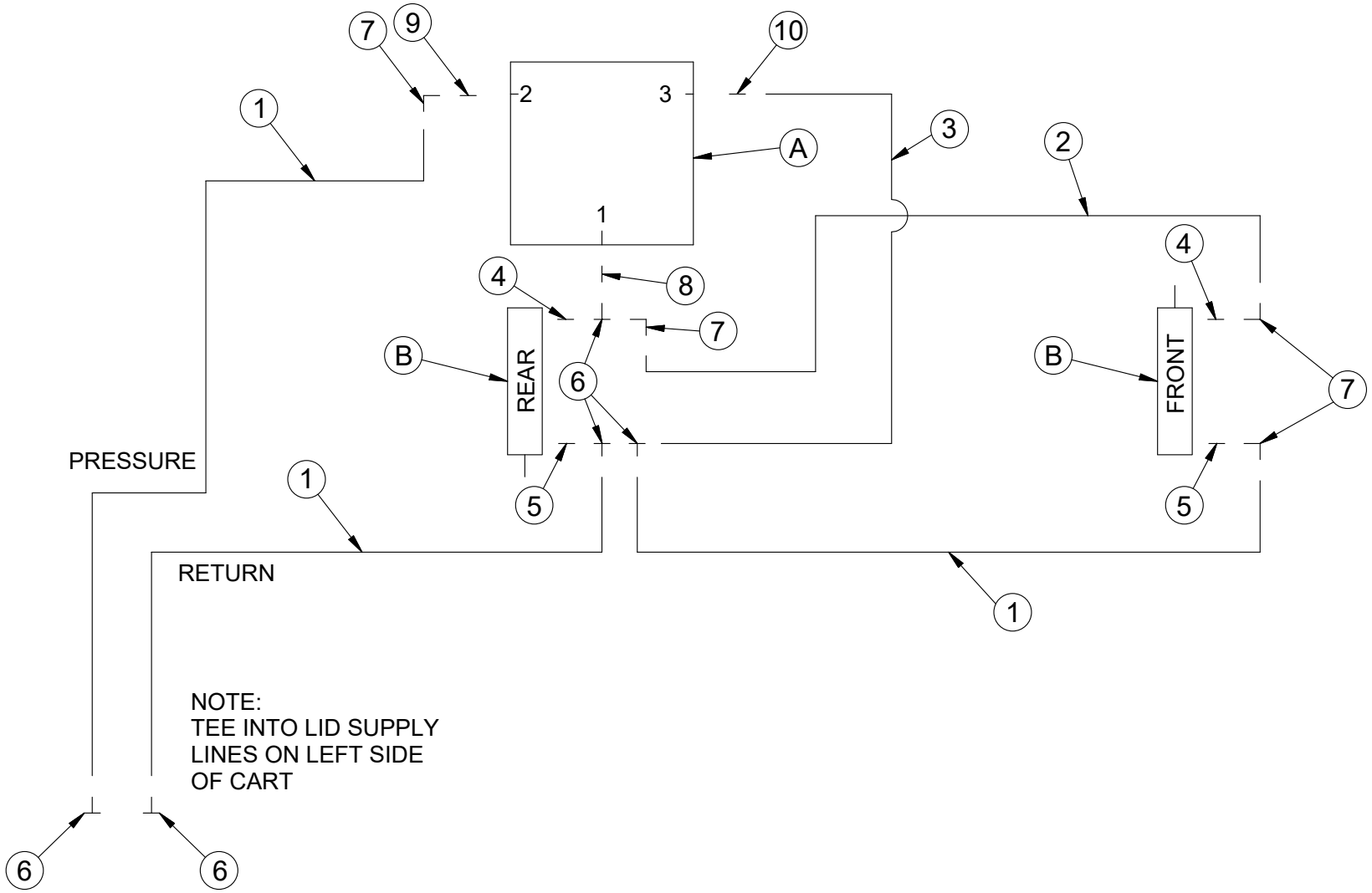

Transport Latch Hydraulic Schematic - Short Conveyor

Item	Qty.	Part No.	Description	Item	Qty.	Part No.	Description
1	1	258592	HOSE, 1/4-2WB X 185 LOA - 06 JIC F-SW X 06 JIC F-SW				
2	1	258593	HOSE, 1/4-2WB X 181 LOA - 06 JIC F-SW X 06 JIC F-SW				
3	1	258594	HOSE, 1/4-2WB X 111 LOA - 06 JIC F-SW X 06 JIC F-SW				
4	1	258595	HOSE, 1/4-2WB X 100 LOA - 06 JIC F-SW X 06 JIC F-SW				
5	1	258583	HOSE, 1/4-2WB X 22 LOA - 06 JIC F-SW X 06 JIC F-SW				
6	2	257998	CONNECTOR, 10 ORB M X 12 JIC M				
7	2	258053	CONNECTOR, 08 ORB M X 06 JIC M				
8	5	258025	TEE, 06 JIC F-SW X 06 JIC M X 06 JIC M - RUN				
9	4	258005	EL, 90D - 06 JIC M X 06 JIC F-SW				
10	1	258059	CONNECTOR, 06 ORB M X 06 JIC F-SW				
11	1	258051	CONNECTOR, 06 ORB M X 06 JIC M				
12	1	257975	CONNECTOR, 04 ORB M X 06 JIC M				
A	1	258503	VALVE, PILOT OPERATED CHECK - CKBBXEN-JCI				
B	2	258551	CYL, HYD 2 X 4 IN - FILL AUGER				
-	0	401285	CTN, HYD - TRANSPORT LATCH - SHORT CONVEYOR - NOVA - 520/560 BU				

Transport Latch Hydraulic Schematic - Short Conveyor
Part Number: 401285

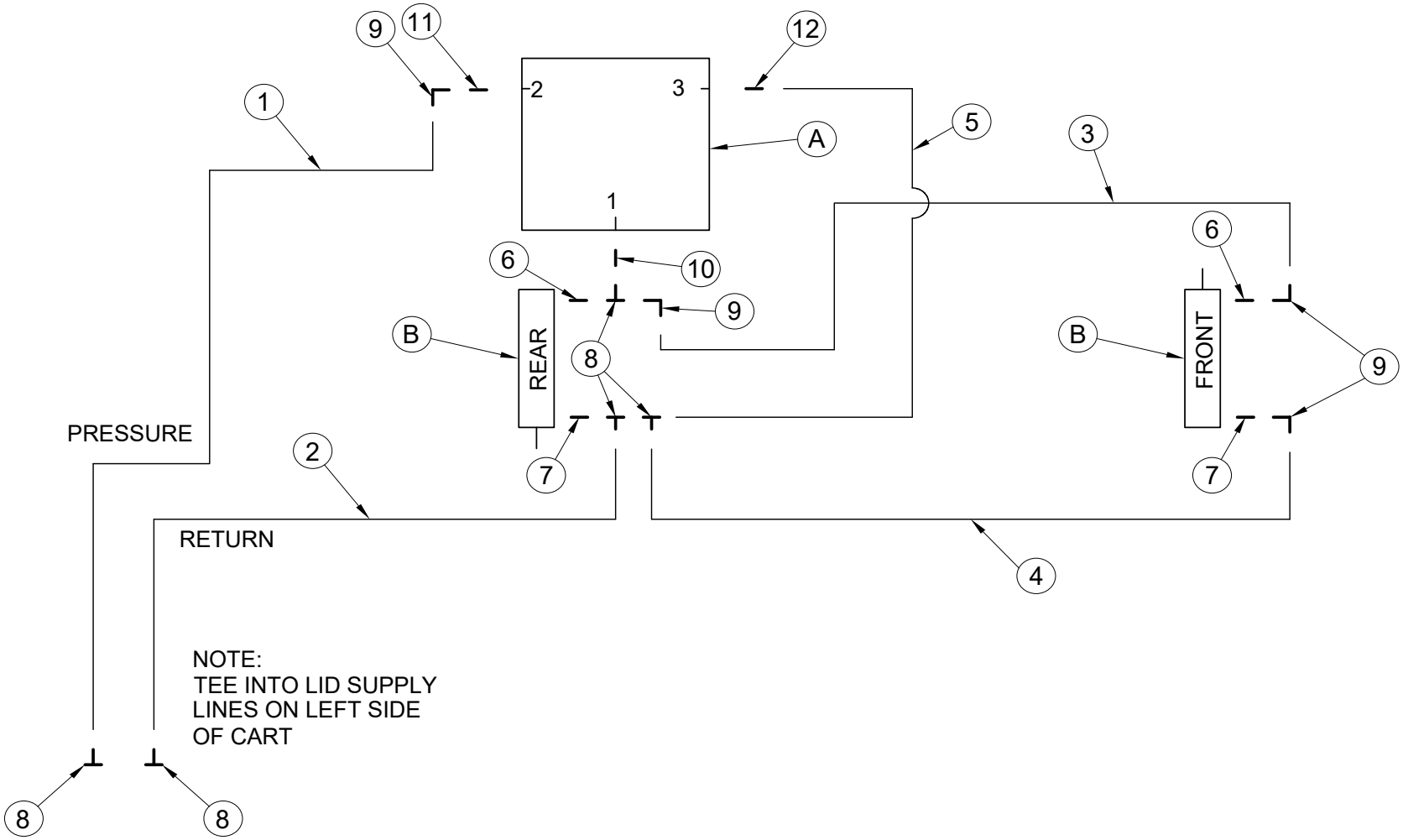

Clearance Lights Electrical Schematic

Item	Qty.	Part No.	Description	Item	Qty.	Part No.	Description
1	1	257012	PLUG, CONNECTOR - 7 WAY - PLASTIC - WAYTEK				
2	1	257014	CABLE GUARD SPRING - PLUG - WAYTEK				
3	1	257216	TERMINAL BOX - 7.5 X 4.3 X 2.2" - BLK				
4	1	257148	TERMINAL STRIP				
5	2	257063	CONNECTOR, 3 PIN - TOWER HALF				
6	10	257052	TERMIAL, FEMALE - WEATHER PACK				
7	10	257069	SEAL, CABLE - WAYTEK				
8	2	257083	STRAIN RELIEF - FLEX NUT - 1/2 NPT - WAYTEK				
9	2	257084	STRAIN RELIEF - LOCK NUT - 1/2 NPT - WAYTEK				
10	2	257085	STRAIN RELIEF - SEAL RING - 1/2 IN - WAYTEK				
11	47	257178	CABLE, 7 WIRE - 480 IN - 6/12 GA - 1/10 GA				
11	40	257178	CABLE, 7 WIRE - 480 IN - 6/12 GA - 1/10 GA				
12	18	257036	CABLE, 4 WIRE - 180 IN - 4/14 GA				
13	1	257184	STRAIN RELIEF - FLEX NUT - 3/4 NPT				
14	1	257185	STRAIN RELIEF - LOCK NUT - 3/4 NPT				
15	1	257186	STRAIN RELIEF - SEAL RING - 3/4 IN				
16	2	257065	CONNECTOR, 2 PIN - TOWER HALF				
17	2	250658	SCREW, TEK - 1/4 X 1 IN				
18	7	222611	WASHER, LOCK - INTERNAL TOOTH - #10 - PL				
19	7	222610	NUT, HEX - #10-24 - PL				
20	1	257175	TERMINAL - RING - #10 - 12/10 GA				
21	14	257157	TERMINAL - RING - #10 - 16/14 GA				

Clearance Lights Electrical Schematic
Part Number: 500323-4 - 780/820 Nova
500322-2 - 520/560 Nova

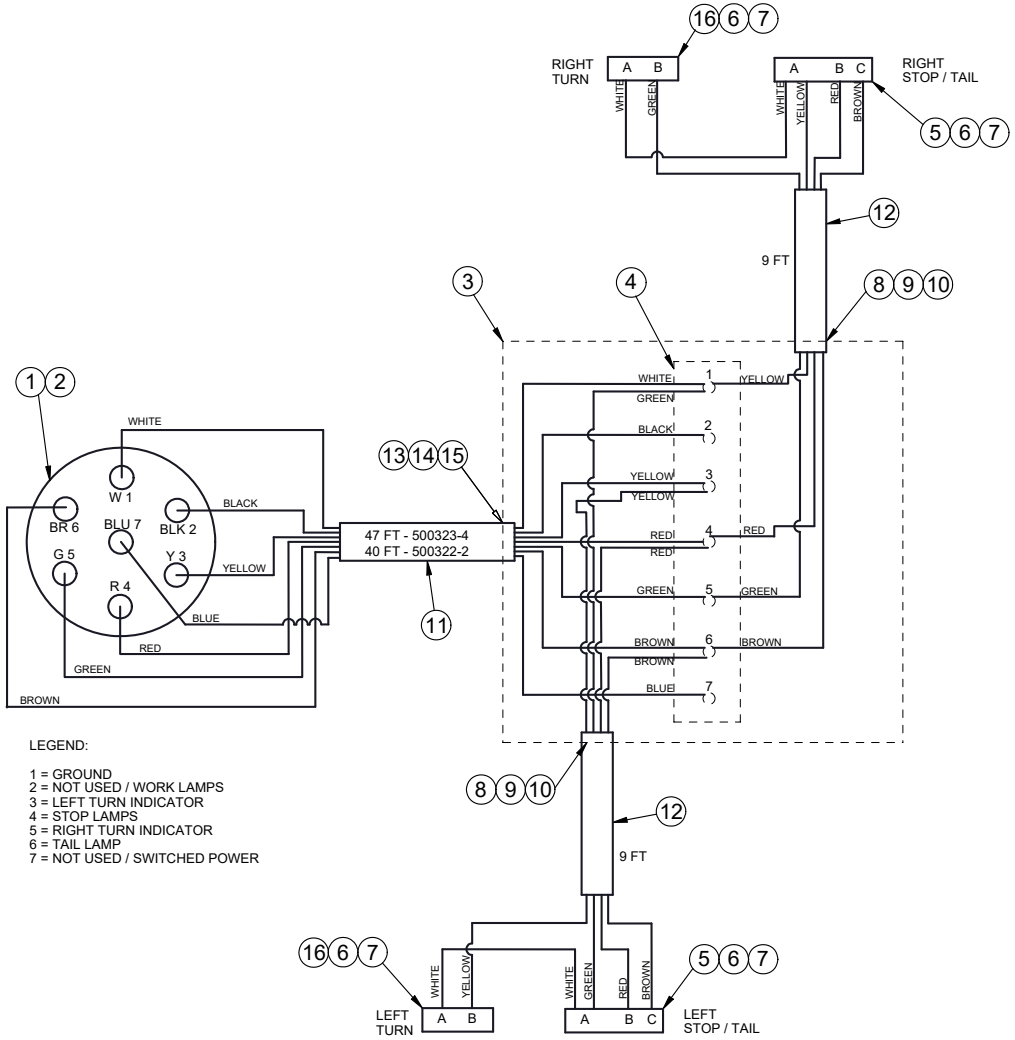

Tow Between Clearance Lights Electrical Schematic

Item	Qty.	Part No.	Description	Item	Qty.	Part No.	Description
1	1	257012	PLUG, CONNECTOR - 7 WAY - PLASTIC - WAYTEK				
2	1	257014	CABLE GUARD SPRING - PLUG - WAYTEK				
3	1	257216	TERMINAL BOX - 7.5 X 4.3 X 2.2" - BLK				
4	1	257219	TERMINAL STRIP - 6 POLE				
5	2	257063	CONNECTOR, 3 PIN - TOWER HALF				
6	10	257052	TERMIAL, FEMALE - WEATHER PACK				
7	10	257069	SEAL, CABLE - WAYTEK				
8	1	257013	SOCKET, CONNECTOR - 7 WAY - PLASTIC				
9	1	257015	BOOT - SOCKET				
10	2	257083	STRAIN RELIEF - FLEX NUT - 1/2 NPT - WAYTEK				
11	2	257084	STRAIN RELIEF - LOCK NUT - 1/2 NPT - WAYTEK				
12	2	257085	STRAIN RELIEF - SEAL RING - 1/2 IN - WAYTEK				
13	1	257016	BRACKET, MNT - 7 WAY SOCKET - BLACK				
14	47	257178	CABLE, 7 WIRE - 480 IN - 6/12 GA - 1/10 GA				
14	38	257178	CABLE, 7 WIRE - 480 IN - 6/12 GA - 1/10 GA				
15	7	257178	CABLE, 7 WIRE - 480 IN - 6/12 GA - 1/10 GA				
15	12	257178	CABLE, 7 WIRE - 480 IN - 6/12 GA - 1/10 GA				
16	18	257036	CABLE, 4 WIRE - 180 IN - 4/14 GA				
17	2	257184	STRAIN RELIEF - FLEX NUT - 3/4 NPT				
18	2	257185	STRAIN RELIEF - LOCK NUT - 3/4 NPT				
19	2	257186	STRAIN RELIEF - SEAL RING - 3/4 IN				
20	2	257065	CONNECTOR, 2 PIN - TOWER HALF				
21	2	250658	SCREW, TEK - 1/4 X 1 IN				
22	7	222611	WASHER, LOCK - INTERNAL TOOTH - #10 - PL				
23	7	222610	NUT, HEX - #10-24 - PL				
24	2	257175	TERMINAL - RING - #10 - 12/10 GA				
25	20	257157	TERMINAL - RING - #10 - 16/14 GA				
26	1	257101	TERMINAL STRIP - 4 POLE				
27	8	257267	HEAT SHRINK TUBE, DUAL WALL - 3/4 IN - 311				
28	2	257046	LOOM, SLIT - .350 IN - FLAME RETARDANT - LFB-350 - BLK				

Tow Between Clearance Lights Electrical Schematic
Part Number: 503051-3 - TBW Nova 630
503061-3 - TBW Nova 780

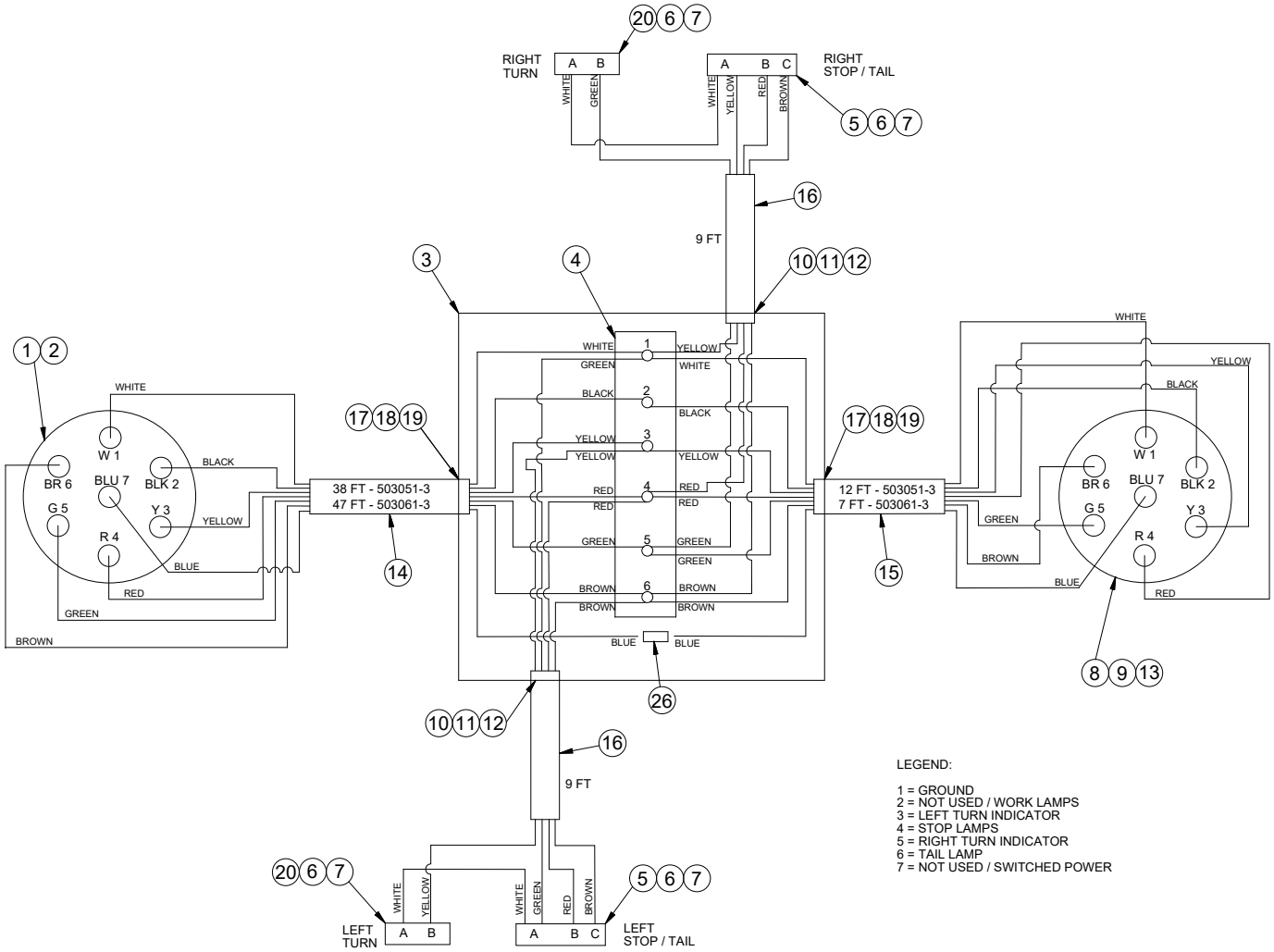

Nova Work Lights Electrical Schematic

Item	Qty.	Part No.	Description	Item	Qty.	Part No.	Description
A	2	257140	LIGHT, LED SQUARE WORK LAMP W/WEATHERPACK - NOVA				
1	2	257086	CABLE, 2 WIRE - 16 GA - SJ16-3				
2	1	257086	CABLE, 2 WIRE - 16 GA - SJ16-3				
3	1	257086	CABLE, 2 WIRE - 16 GA - SJ16-3				
4	1	257086	CABLE, 2 WIRE - 16 GA - SJ16-3				
5	2	257090	SPLICE KIT - 6 WAY TPA- METRI PACK				
6	2	257091	SPLICE KIT - 6 CONTACT BODY - 280 SERIES- METRI PACK				
7	2	257092	SPLICE KIT - CAP - 280 SERIES- METRI PACK				
8	2	257093	SPLICE KIT - 6 GANG COMMON BAR-METRI PACK				
9	4	257094	SPLICE KIT - CAVITY PLUG - GREEN				
10	8	257095	SPLICE KIT - SPLICE TERMINAL - FEMALE - METRI PACK				
11	22	257076	SEAL, CABLE - GREY - WEATHER PACK				
12	5	257066	CONNECTOR, 2 PIN - SHROUD HALF - WAYTEK				
13	2	257065	CONNECTOR, 2 PIN - TOWER HALF				
14	4	257052	TERMIAL, FEMALE - WEATHER PACK				
15	10	257051	TERMIAL, MALE - WAYTEK				
16	1	257086	CABLE, 2 WIRE - 16 GA - SJ16-3				
17	1	257271	SWITCH, TOGGLE - SPDT ON-ON				
18	2	257123	RECEPTACLE, CONNECTOR - DEUTSCH - 2 PIN				
19	4	257127	TERMINAL, PIN - DEUTSCH - 16/14 GA				
20	2	257133	RECEPTACLE, WEDGE - DEUTSCH - 2 PIN				
21	1	257086	CABLE, 2 WIRE - 16 GA - SJ16-3				
22	1	257086	CABLE, 2 WIRE - 16 GA - SJ16-3				
23	1	256975	RELAY, 12V - 40A - SPDT				
24	3	257056	SPADE - PUSH ON - FEMALE - BLUE - 16/14				
25	2	256984	WIRE, 16 GA - BLACK - WX16-0				
26	0	257077	TAPE, COLD SHRINK - 1 IN WIDE				
27	1	256976	CONNECTOR, RELAY - 5 PIN				
28	5	256977	TERMINAL, RELAY CONNECTOR				

Nova Work Lights Electrical Schematic

Part Number: 500324-3 – 630/780/820 Nova
500326-3 - 520/560 Nova
503056-2 - Tow Between Nova
500329-1 - 4000 Gal. Nova

NOTE : LETTERED COMPONENTS ARE PICKED SEPARATELY FROM WIRE HARNESS

EVERY WIRE SHOULD HAVE A CABLE SEAL ON IT (ITEM 11)

WHEN CONNECTING TO VIPER 4+ UNITS, CONNECT BLACK (+) TO '2' TERMINAL.

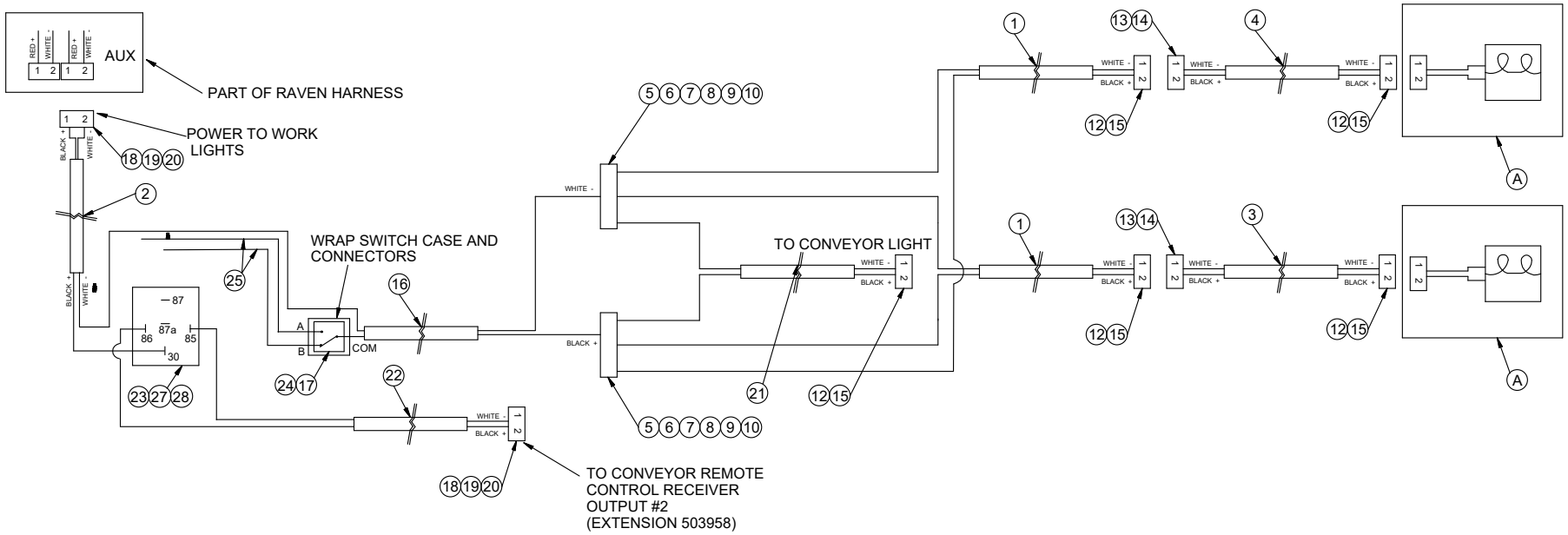

Nova Conveyor Control Electrical Schematic

Item	Qty.	Part No.	Description	Item	Qty.	Part No.	Description
1	6	256984	WIRE, 16 GA - BLACK - WX16-0				
2	21	257086	CABLE, 2 WIRE - 16 GA - SJ16-3				
3	3	257090	SPLICE KIT - 6 WAY TPA- METRI PACK				
4	3	257091	SPLICE KIT - 6 CONTACT BODY - 280 SERIES- METRI PACK				
5	3	257092	SPLICE KIT - CAP - 280 SERIES- METRI PACK				
6	3	257093	SPLICE KIT - 6 GANG COMMON BAR-METRI PACK				
7	2	257094	SPLICE KIT - CAVITY PLUG - GREEN				
8	15	257095	SPLICE KIT - SPLICE TERMINAL - FEMALE - METRI PACK				
9	20	257118	TERMINAL, SOCKET - DEUTSCH - 16-14 GA				
10	2	257123	RECEPTACLE, CONNECTOR - DEUTSCH - 2 PIN				
11	4	257127	TERMINAL, PIN - DEUTSCH - 16/14 GA				
12	2	257133	RECEPTACLE, WEDGE - DEUTSCH - 2 PIN				
13	2	257134	PLUG, CONNECTOR - DEUTSCH - 2 PIN				
14	2	257135	PLUG, WEDGE - DEUTSCH - 2 PIN				
15	8	257263	PLUG, CONNECTOR - DEUTSCH - LED - 2 PIN - DT06-2S				
16	8	257264	PLUG, WEDGE - 2 POS LED - DEUTSCH - 2 PIN				
17	1	257403	FUSE - 20 AMP, BLADE				
18	1	256978	FUSE HOLDER, INLINE				
19	1	257075	CONNECTOR, BUTT - 16/14 GA				
20	22	257266	LOOM, SLIT - .250 IN - FLAME RETARDANT - BLK				
21	1	280010	KAR-TECH REMOTE SYSTEM, 10 BUTTON				
22	1	257008	CONNECTOR, DIN -932106-400 - C/W GASKET				

Nova Conveyor Control Electrical Schematic
Part Number: 503907-1

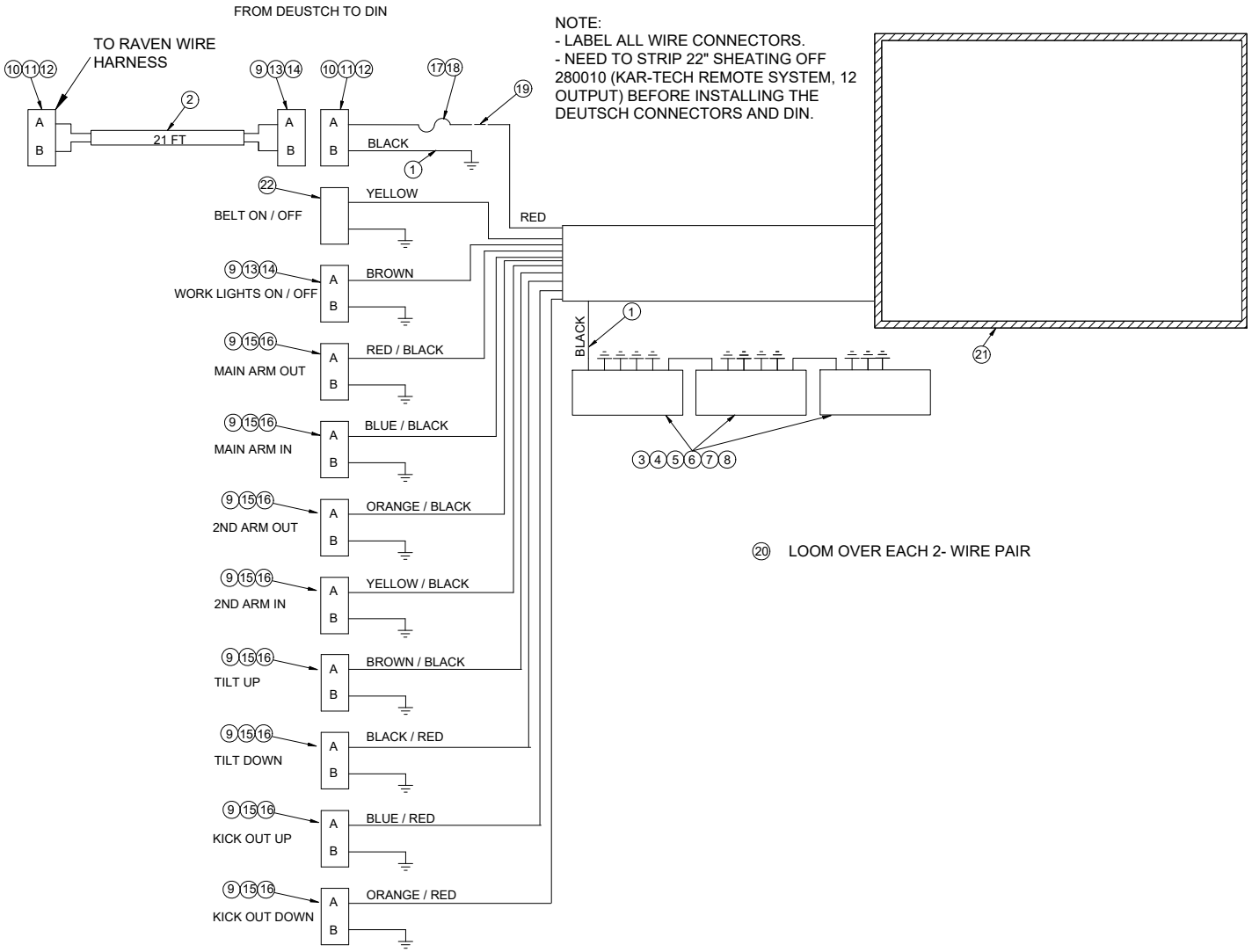

NOTE:
- LABEL ALL WIRE CONNECTORS.
- NEED TO STRIP 22" SHEATING OFF 280010 (KAR-TECH REMOTE SYSTEM, 12 OUTPUT) BEFORE INSTALLING THE DEUTSCH CONNECTORS AND DIN.

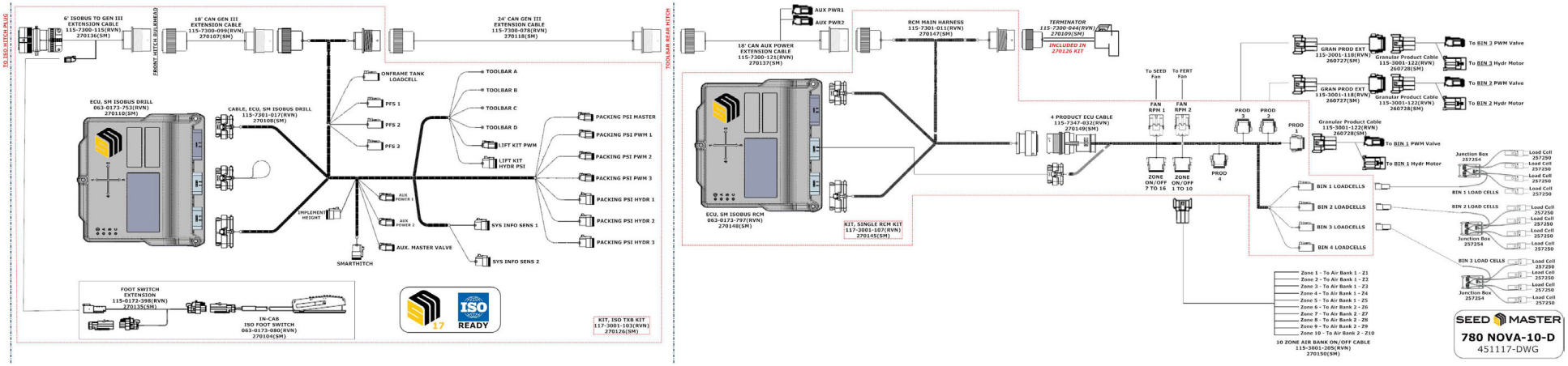
TO ISO HITCH PLUG
6' ISOBUS TO GEN III EXTENSION CABLE 115-7300-115(RVN) 270136(SM)
FRONT HITCH BULKHEAD
18' CAN GEN III EXTENSION CABLE 115-7300-099(RVN) 270107(SM)
24' CAN GEN III EXTENSION CABLE 115-7300-078(RVN) 270118(SM)
TOOLBAR REAR HITCH
ECU, SM ISOBUS DRILL 063-0173-753(RVN) 270110(SM)
CABLE, ECU, SM ISOBUS DRILL 115-7201-017(RVN) 270108(SM)
ONFRAME TANK LOADCELL
PFS 1
PFS 2
PFS 3
TOOLBAR A
TOOLBAR B
TOOLBAR C
TOOLBAR D
LIFT KIT PWM
LIFT KIT HYDR PSI
PACKING PSI MASTER
PACKING PSI PWM 1
PACKING PSI PWM 2
PACKING PSI PWM 3
PACKING PSI HYDR 1
PACKING PSI HYDR 2
PACKING PSI HYDR 3
IMPLEMENT HEIGHT
AUX POWER 1
AUX POWER 2
AUX. MASTER VALVE
SYS INFO SENS 1
SYS INFO SENS 2
SMARTHITCH
FOOT SWITCH EXTENSION 115-0173-398(RVN) 270135(SM)
IN-CAB ISO FOOT SWITCH 063-0173-080(RVN) 270104(SM)
ISO READY
KIT, ISO TXB KIT 117-3001-103(RVN) 270126(SM)
AUX PWR1
AUX PWR2
18' CAN AUX POWER EXTENSION CABLE 115-7300-121(RVN) 270137(SM)
RCM MAIN HARNESS 115-7301-011(RVN) 270147(SM)
TERMINATOR 115-7300-044(RVN) 270109(SM)
INCLUDED IN 270126 KIT
ECU, SM ISOBUS RCM 063-0173-797(RVN) 270148(SM)
KIT, SINGLE RCM KIT 117-3001-107(RVN) 270145(SM)
4 PRODUCT ECU CABLE 115-7347-032(RVN) 270149(SM)
To SEED Fan
To FERT Fan
FAN RPM 1
FAN RPM 2
ZONE ON/OFF 7 TO 16
ZONE ON/OFF 1 TO 10
PROD 3
PROD 2
PROD 1
PROD 4
GRAN PROD EXT 115-3001-118(RVN) 260727(SM)
Granular Product Cable 115-3001-122(RVN) 260728(SM)
To BIN 3 PWM Valve
To BIN 3 Hydr Motor
To BIN 2 PWM Valve
To BIN 2 Hydr Motor
Granular Product Cable 115-3001-122(RVN) 260729(SM)
To BIN 1 PWM Valve
To BIN 1 Hydr Motor
BIN 1 LOADCELLS
BIN 2 LOADCELLS
BIN 3 LOADCELLS
BIN 4 LOADCELLS
Junction Box 257254
Load Cell 257250
BIN 1 LOAD CELLS
BIN 2 LOAD CELLS
BIN 3 LOAD CELLS
Zone 1 - To Air Bank 1 - Z1
Zone 2 - To Air Bank 1 - Z2
Zone 3 - To Air Bank 1 - Z3
Zone 4 - To Air Bank 1 - Z4
Zone 5 - To Air Bank 1 - Z5
Zone 6 - To Air Bank 2 - Z6
Zone 7 - To Air Bank 2 - Z7
Zone 8 - To Air Bank 2 - Z8
Zone 9 - To Air Bank 2 - Z9
Zone 10 - To Air Bank 2 - Z10
10 ZONE AIR BANK ON/OFF CABLE 115-3001-205(RVN) 270150(SM)
SEED MASTER
780 NOVA-10-D
451117-DWG

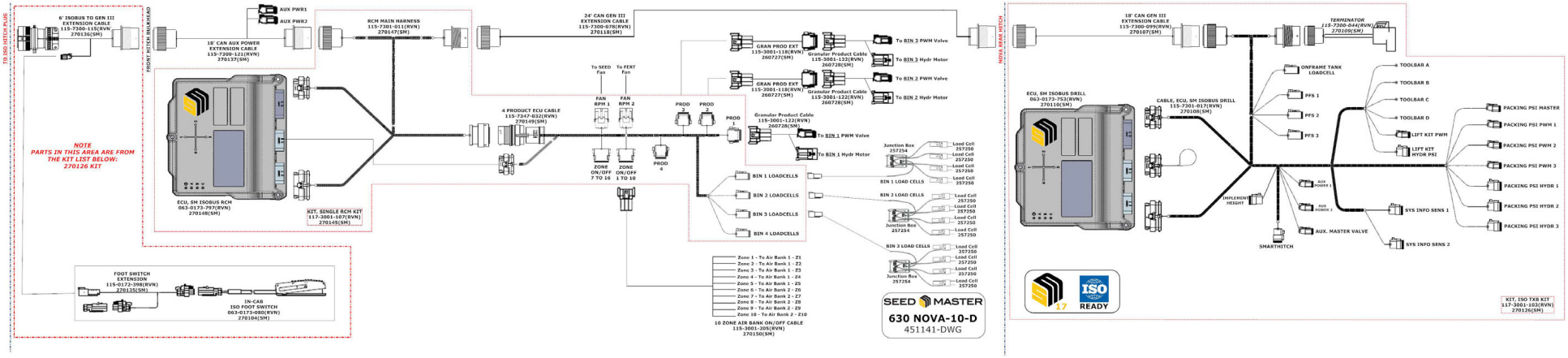
TO ISO HITCH PLUG
6' ISOBUS TO GEN III EXTENSION CABLE 115-7300-115(RVN) 270136(SM)
FRONT HITCH BULKHEAD
AUX PWR1
AUX PWR2
18' CAN AUX POWER EXTENSION CABLE 115-7300-121(RVN) 270137(SM)
RCM MAIN HARNESS 115-7301-011(RVN) 270147(SM)
24' CAN GEN III EXTENSION CABLE 115-7300-078(RVN) 270118(SM)
NOTE
PARTS IN THIS AREA ARE FROM THE KIT LIST BELOW: 270126 KIT
ECU, SM ISOBUS RCM 063-0173-797(RVN) 270148(SM)
KIT, SINGLE RCM KIT 117-3001-107(RVN) 270145(SM)
4 PRODUCT ECU CABLE 115-7347-032(RVN) 270149(SM)
To SEED Fan
To FERT Fan
FAN RPM 1
FAN RPM 2
ZONE ON/OFF 7 TO 16
ZONE ON/OFF 1 TO 10
PROD 4
PROD 3
PROD 2
PROD 1
GRAN PROD EXT 115-3001-118(RVN) 260727(SM)
Granular Product Cable 115-3001-122(RVN) 260728(SM)
To BIN 3 PWM Valve
To BIN 3 Hydr Motor
To BIN 2 PWM Valve
To BIN 2 Hydr Motor
To BIN 1 PWM Valve
To BIN 1 Hydr Motor
BIN 1 LOADCELLS
BIN 2 LOADCELLS
BIN 3 LOADCELLS
BIN 4 LOADCELLS
Junction Box 257254
Load Cell 257250
BIN 1 LOAD CELLS
BIN 2 LOAD CELLS
BIN 3 LOAD CELLS
Zone 1 - To Air Bank 1 - Z1
Zone 2 - To Air Bank 1 - Z2
Zone 3 - To Air Bank 1 - Z3
Zone 4 - To Air Bank 1 - Z4
Zone 5 - To Air Bank 1 - Z5
Zone 6 - To Air Bank 2 - Z6
Zone 7 - To Air Bank 2 - Z7
Zone 8 - To Air Bank 2 - Z8
Zone 9 - To Air Bank 2 - Z9
Zone 10 - To Air Bank 2 - Z10
10 ZONE AIR BANK ON/OFF CABLE 115-3001-205(RVN) 270150(SM)
FOOT SWITCH EXTENSION 115-0172-398(RVN) 270135(SM)
IN-CAB ISO FOOT SWITCH 063-0173-080(RVN) 270104(SM)
SEED MASTER
630 NOVA-10-D
451141-DWG
NOVA REAR HITCH
18' CAN GEN III EXTENSION CABLE 115-7300-099(RVN) 270107(SM)
TERMINATOR 115-7300-044(RVN) 270109(SM)
ECU, SM ISOBUS DRILL 063-0173-753(RVN) 270110(SM)
CABLE, ECU, SM ISOBUS DRILL 115-7301-017(RVN) 270108(SM)
ONFRAME TANK LOADCELL
PFS 1
PFS 2
PFS 3
IMPLEMENT HEIGHT
SMARTHITCH
AUX POWER 1
AUX POWER 2
AUX. MASTER VALVE
TOOLBAR A
TOOLBAR B
TOOLBAR C
TOOLBAR D
LIFT KIT PWM
LIFT KIT HYDR PSI
SYS INFO SENS 1
SYS INFO SENS 2
PACKING PSI MASTER
PACKING PSI PWM 1
PACKING PSI PWM 2
PACKING PSI PWM 3
PACKING PSI HYDR 1
PACKING PSI HYDR 2
PACKING PSI HYDR 3
ISO READY
KIT, ISO TXB KIT 117-3001-103(RVN) 270126(SM)

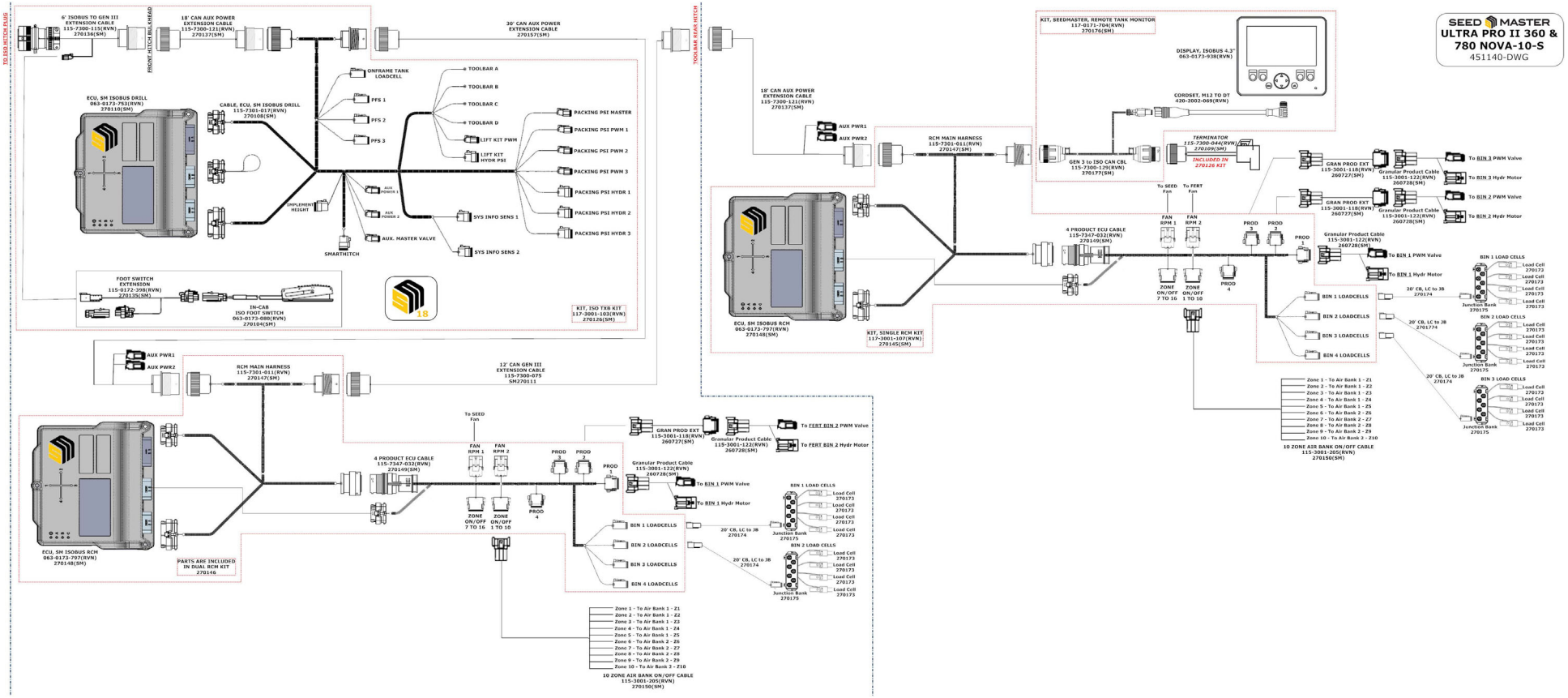
SEED MASTER
ULTRA PRO II 360 & 780 NOVA-10-S
451140-DWG
TO ISO HITCH PLUG
6' ISOBUS TO GEN III EXTENSION CABLE 115-7300-115(RVN) 270136(SM)
FRONT HITCH BULKHEAD
18' CAN AUX POWER EXTENSION CABLE 115-7300-121(RVN) 270137(SM)
30' CAN AUX POWER EXTENSION CABLE 270157(SM)
ECU, SM ISOBUS DRILL 063-0173-753(RVN) 270110(SM)
CABLE, ECU, SM ISOBUS DRILL 115-7301-017(RVN) 270108(SM)
ONFRAME TANK LOADCELL
PFS 1
PFS 2
PFS 3
TOOLBAR A
TOOLBAR B
TOOLBAR C
TOOLBAR D
LIFT KIT PWM
LIFT KIT HYDR PSI
PACKING PSI MASTER
PACKING PSI PWM 1
PACKING PSI PWM 2
PACKING PSI PWM 3
PACKING PSI HYDR 1
PACKING PSI HYDR 2
PACKING PSI HYDR 3
IMPLEMENT HEIGHT
AUX POWER 1
AUX POWER 2
AUX. MASTER VALVE
SYS INFO SENS 1
SYS INFO SENS 2
SMARTHITCH
FOOT SWITCH EXTENSION 115-0172-298(RVN) 270135(SM)
IN-CAB ISO FOOT SWITCH 063-0173-080(RVN) 270104(SM)
KIT, ISO TXB KIT 117-3001-102(RVN) 270126(SM)
TOOLBAR REAR HITCH
KIT, SEEDMASTER, REMOTE TANK MONITOR 117-0171-704(RVN) 270176(SM)
DISPLAY, ISOBUS 4.3" 063-0173-938(RVN)
CORDSET, M12 TO DT 420-2002-069(RVN)
18' CAN AUX POWER EXTENSION CABLE 115-7300-121(RVN) 270137(SM)
AUX PWR1
AUX PWR2
RCM MAIN HARNESS 115-7301-011(RVN) 270147(SM)
GEN 3 to ISO CAN CBL 115-7300-129(RVN) 270177(SM)
TERMINATOR 115-7300-044(RVN) 270109(SM)
INCLUDED IN 270126 KIT
GRAN PROD EXT 115-3001-118(RVN) 260727(SM)
Granular Product Cable 115-3001-122(RVN) 260728(SM)
To BIN 3 PWM Valve
To BIN 3 Hydr Motor
To BIN 2 PWM Valve
To BIN 2 Hydr Motor
To SEED Fan
To FERT Fan
FAN RPM 1
FAN RPM 2
4 PRODUCT ECU CABLE 115-7347-032(RVN) 270149(SM)
PROD 3
PROD 2
PROD 1
PROD 4
ZONE ON/OFF 7 TO 16
ZONE ON/OFF 1 TO 10
To BIN 1 PWM Valve
To BIN 1 Hydr Motor
ECU, SM ISOBUS RCM 063-0173-797(RVN) 270148(SM)
KIT, SINGLE RCM KIT 117-3001-107(RVN) 270145(SM)
BIN 1 LOADCELLS
BIN 2 LOADCELLS
BIN 3 LOADCELLS
BIN 4 LOADCELLS
BIN 1 LOAD CELLS
BIN 2 LOAD CELLS
BIN 3 LOAD CELLS
Load Cell 270173
Load Cell 270172
20' CB, LC to JB 270174
Junction Bank 270175
Zone 1 - To Air Bank 1 - Z1
Zone 2 - To Air Bank 1 - Z2
Zone 3 - To Air Bank 1 - Z3
Zone 4 - To Air Bank 1 - Z4
Zone 5 - To Air Bank 1 - Z5
Zone 6 - To Air Bank 2 - Z6
Zone 7 - To Air Bank 2 - Z7
Zone 8 - To Air Bank 2 - Z8
Zone 9 - To Air Bank 2 - Z9
Zone 10 - To Air Bank 3 - Z10
10 ZONE AIR BANK ON/OFF CABLE 115-3001-205(RVN) 270150(SM)
12' CAN GEN III EXTENSION CABLE 115-7300-075 SN270111
To SEED Fan
To FERT BIN 2 PWM Valve
To FERT BIN 2 Hydr Motor
PARTS ARE INCLUDED IN DUAL RCM KIT 270148

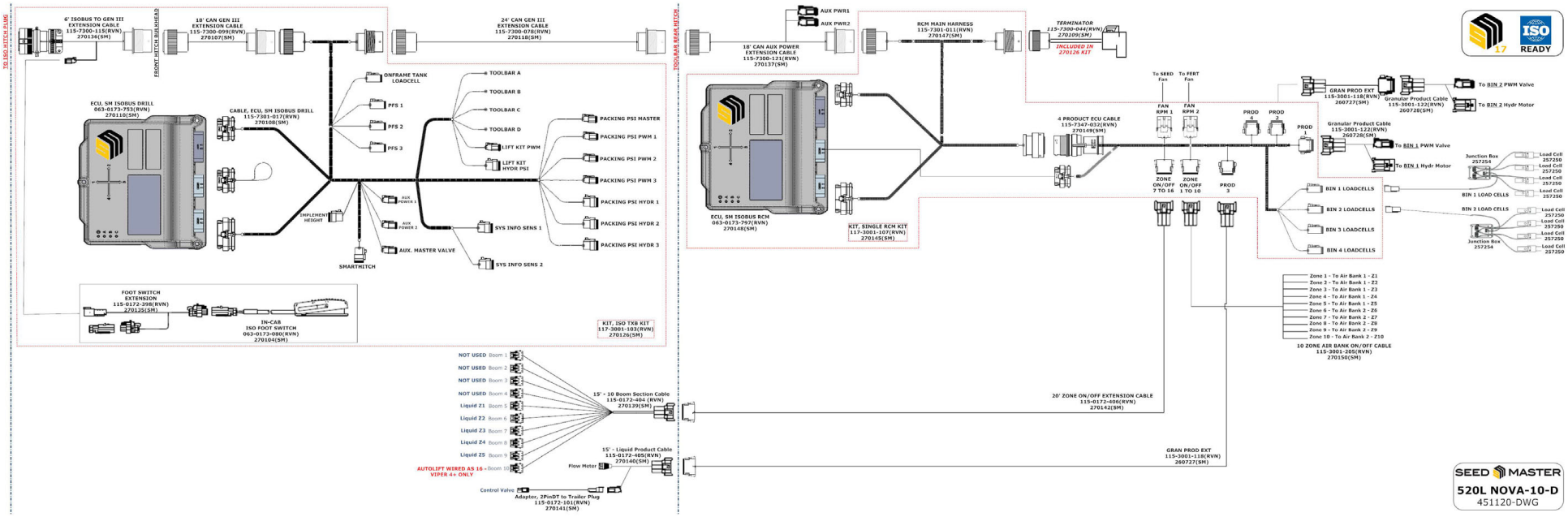
TO ISO HITCH PLUG
6' ISOBUS TO GEN III EXTENSION CABLE 115-7300-115(RVN) 270136(SM)
FRONT HITCH BULKHEAD
18' CAN GEN III EXTENSION CABLE 115-7300-099(RVN) 270107(SM)
24' CAN GEN III EXTENSION CABLE 115-7300-078(RVN) 270118(SM)
ECU, SM ISOBUS DRILL 063-0173-753(RVN) 270110(SM)
CABLE, ECU, SM ISOBUS DRILL 115-7301-017(RVN) 270108(SM)
ONFRAME TANK LOADCELL
PFS 1
PFS 2
PFS 3
TOOLBAR A
TOOLBAR B
TOOLBAR C
TOOLBAR D
LIFT KIT PWM
LIFT KIT HYDR PSI
PACKING PSI MASTER
PACKING PSI PWM 1
PACKING PSI PWM 2
PACKING PSI PWM 3
PACKING PSI HYDR 1
PACKING PSI HYDR 2
PACKING PSI HYDR 3
IMPLEMENT HEIGHT
AUX POWER 1
AUX POWER 2
AUX. MASTER VALVE
SYS INFO SENS 1
SYS INFO SENS 2
SMARTHITCH
FOOT SWITCH EXTENSION 115-0172-398(RVN) 270135(SM)
IN-CAB ISO FOOT SWITCH 063-0173-080(RVN) 270104(SM)
KIT, ISO TX8 KIT 117-3001-103(RVN) 270126(SM)
TO TOOLBAR REAR HITCH
AUX PWR1
AUX PWR2
18' CAN AUX POWER EXTENSION CABLE 115-7300-121(RVN) 270137(SM)
RCM MAIN HARNESS 115-7301-011(RVN) 270147(SM)
TERMINATOR 115-7300-044(RVN) 270109(SM)
INCLUDED IN 270126 KIT
ECU, SM ISOBUS RCM 063-0173-797(RVN) 270148(SM)
KIT, SINGLE RCM KIT 117-3001-107(RVN) 270145(SM)
4 PRODUCT ECU CABLE 115-7347-032(RVN) 270149(SM)
To SEED Fan
To FERT Fan
FAN RPM 1
FAN RPM 2
PROD 4
PROD 2
PROD 1
PROD 3
ZONE ON/OFF 7 TO 16
ZONE ON/OFF 1 TO 10
GRAN PROD EXT 115-3001-118(RVN) 260727(SM)
Granular Product Cable 115-3001-122(RVN) 260728(SM)
To BIN 2 PWM Valve
To BIN 2 Hydr Motor
To BIN 1 PWM Valve
To BIN 1 Hydr Motor
BIN 1 LOADCELLS
BIN 2 LOADCELLS
BIN 3 LOADCELLS
BIN 4 LOADCELLS
Junction Box 257254
Load Cell 257250
BIN 1 LOAD CELLS
BIN 2 LOAD CELLS
Zone 1 - To Air Bank 1 - Z1
Zone 2 - To Air Bank 1 - Z2
Zone 3 - To Air Bank 1 - Z3
Zone 4 - To Air Bank 1 - Z4
Zone 5 - To Air Bank 1 - Z5
Zone 6 - To Air Bank 2 - Z6
Zone 7 - To Air Bank 2 - Z7
Zone 8 - To Air Bank 2 - Z8
Zone 9 - To Air Bank 2 - Z9
Zone 10 - To Air Bank 2 - Z10
10 ZONE AIR BANK ON/OFF CABLE 115-3001-205(RVN) 270150(SM)
20' ZONE ON/OFF EXTENSION CABLE 115-0172-406(RVN) 270142(SM)
GRAN PROD EXT 115-3001-118(RVN) 260727(SM)
NOT USED Boom 1
NOT USED Boom 2
NOT USED Boom 3
NOT USED Boom 4
Liquid Z1 Boom 5
Liquid Z2 Boom 6
Liquid Z3 Boom 7
Liquid Z4 Boom 8
Liquid Z5 Boom 9
AUTOLIFT WIRED AS 16 - VIPER 4+ ONLY Boom 10
15' - 10 Boom Section Cable 115-0172-404 (RVN) 270139(SM)
15' - Liquid Product Cable 115-0172-405(RVN) 270140(SM)
Flow Motor
Control Valve
Adapter, 2PinDT to Trailer Plug 115-0172-101(RVN) 270141(SM)
ISO 17 READY
SEED MASTER
520L NOVA-10-D
451120-DWG