SEEDMASTER | 2022

NOVA

PARTS BOOK

Table of Contents

FRAME

2 520/560 Nova Frame
3 630 Tow Behind Nova Frame
4 780/820 Nova Frame
5 630 T/B Nova Frame
6 780 T/B Nova Frame
7 Hitch Jack
8 Hitch Jack - T/B Nova
9 Hose Holder - Front Hitch - T/B Nova
10 Hitch Hose Holder - T/B Nova
11 Distribution Pipes Hitch Guide
12 Nova Electric Panel
13 T/B Nova Electric Panel
14 Axle - Single 800/65R32
15 Axle - Dual 710/70R38
16 Clearance Lights
17 Rear Hitch - 520/780 Nova
18 Rear Hitch - 560/820 Nova
19 Rear Hitch - 630 T/B Nova

TANKS

21 Meter Box - Standard Tank
23 Meter Box - Canola Tank
25 Common Drive Shaft
27 Standard Reduction Drive
29 T/B Standard Reduction Drive
31 Canola Reduction Drive
33 T/B Canola Reduction Drive
35 Australian Canola Reduction Drive
37 Australian T/B Canola Reduction Drive
39 Raven Hydraulic Meter Motor
41 Tank to Meter Transition
43 40 BU Canola Tank
44 110 BU T/B Nova Tank
46 Tank Cradle / Load Cells
47 Tank Lid
49 Nova Y-Section Bundles
51 T/B Nova Y-Section Bundles
53 Fans/Air Splitter
55 Fans/Air Splitter - T/B Nova
57 Rear Walkway - 820/560 Nova
59 Rear Walkway - 780/520 Nova
61 Side Walkway - 780/820 Nova
63 Side Walkway - 630 T/B Nova
65 Side Walkway - 780 T/B Nova
67 Long Conveyor - 780/820 Nova
69 Long Conveyor - 780/820 Nova - Main Mount
71 Long Conveyor - 780/820 Nova - Main Mount Cont'd
73 Long Conveyor - 780/820 Nova - Latch
75 Short Conveyor - 520/560/630 Nova
77 Short Conveyor - 520/560/630 Nova - Main Mount
79 Short Conveyor - 520/560/630 Nova - Latch

LIQUID COMPONENTS

81 Liquid Nova Pump/Valves
84 Plumbing Schematic for Liquid Fertilizer

TABLE OF CONTENTS CONTINUED ON NEXT PAGE

Table of Contents Cont'd

AIR SYSTEMS

85 Top Up Air - 520 Nova Dual Shoot
86 Top Up Air - 520 Nova Single Shoot
87 Top Up Air - 560 Nova Dual Shoot
88 Top Up Air - 560 Nova Single Shoot
89 Top Up Air - 780 Nova Dual Shoot
90 Top Up Air - 780 Nova Single Shoot
91 Top Up Air - 820 Nova Dual Shoot
92 Top Up Air - 820 Nova Single Shoot
93 Compressed Air System

HYDRAULIC SCHEMATICS

95 Meter Drive - Nova - 2 Tanks
97 Meter Drive Tow Behind Nova - 3 Tanks
99 Meter Drive - 260 L - 1 Tank
100 Meter Drive - Nova T/B - 2 Tanks
103 Meter Tank - Nova T/B + 1 Tank
104 Meter Drive + 1 Tank
105 Meter Drive - Nova T/B - 3 Tanks
107 Lids - Single Shoot
109 Lids - Dual Shoot
111 Hydraulic Flow - Lid Selector Valve
112 Lids + 1 Tank
113 Lids - Canola Tank
114 Lids - 110 BU Tank - T/B Nova
115 Dual Fans
117 Single Fan
119 Dual Fans - T/B Nova
121 Single Fan - T/B Nova
123 Long Conveyor - 780/820 Nova
125 Short Conveyor - 520/560/630 Nova
127 Transport Latch - Long Conveyor
128 Transport Latch - Short Conveyor

ELECTRICAL SCHEMATICS

129 Clearance Lights
131 Clearance Lights - T/B Nova
133 Nova Work Lights
135 Nova Conveyor Control
137 ISO 780 NOVA-10-D
138 ISO 630 NOVA-10-D
139 ISO 780 NOVA-10-S SXX-R
140 ISO 520L NOVA-10-D

Parts Description:
520/560 Nova Frame

ITEM	QTY.	PART NO.	DESCRIPTION
1	1	500141	BDL, REAR AXLE - NOVA - DUAL 800/65R32
2	2	501500	ASSY, RAIL - SIDE - FRAME - NOVA 520BU - BLK
3	1	500190-1	ASSY, BEAM - FRT CROSS - NOVA - BLK
4	1	501520	ASSY, BEAM - FRONT HITCH - RH - NOVA 520BU - BLK
5	1	501521	ASSY, FRONT HITCH - LH - NOVA - 520BU - BLK
6	1	500170	ASSY, FRT HITCH TONGUE - NOVA - BLK
7	1	254513	DRAWBAR - HOLLAND - DB-100FQ1
8	4	500165	PLATE, CLAMP 1/2 IN - U-CLAMP - NOVA - BLK
9	2	500166	PLATE, SHIM 1/2 IN - U-CLAMP - NOVA - BLK
10	1	500205	BDL, HITCH JACK - NOVA
11	4	250029	BOLT, HEX 7/8 X 4 1/2 UNC GR5 PL
12	4	404225	BUSH, 1 3/4OD X .9ID X 1 3/8 IN - FRONT CASTOR
13	80	250553	WASHER, FLAT 7/8IN GR8 PL
14	84	250452	NUT, HEX - 7/8 UNC PL
15	64	250006	BOLT, HEX 7/8 X 2 1/4 UNC GR5 PL
16	12	250044	BOLT, HEX 7/8 X 3 IN UNC GR5 PL
17	1	500955	ASSY, CRADLE - MID HITCH - 2 1/2 HOSES - NOVA - BLK
18	4	250234	BOLT, U-SQ - 1/2 UNC X 12 ID X 8 IN - 2 IN THD - GR5 PL
19	8	250555	WASHER, FLAT - 1/2 IN - GR8 - PL
20	8	250450	NUT, HEX 1/2 UNC GR5 PL
21	1	500950	ASSY, CRADLE - MID HITCH - REAR - 2 1/2 HOSES-NOVA - BLK
22	2	500230	BDL, HYD HOSE HOLDERS - FRONT HITCH - NOVA
23	1	501895	BDL , DISTRIBUTION PIPES HITCH GUIDE - NOVA - BLK
520/560 NOVA FRAME WITH TRACKS (SUBSTITUTE ITEMS BELOW)			
ITEM	QTY.	PART NO.	DESCRIPTION
1	1	500125	BDL, TRACK SYS - CAMOPLAST - NOVA - 100-3612

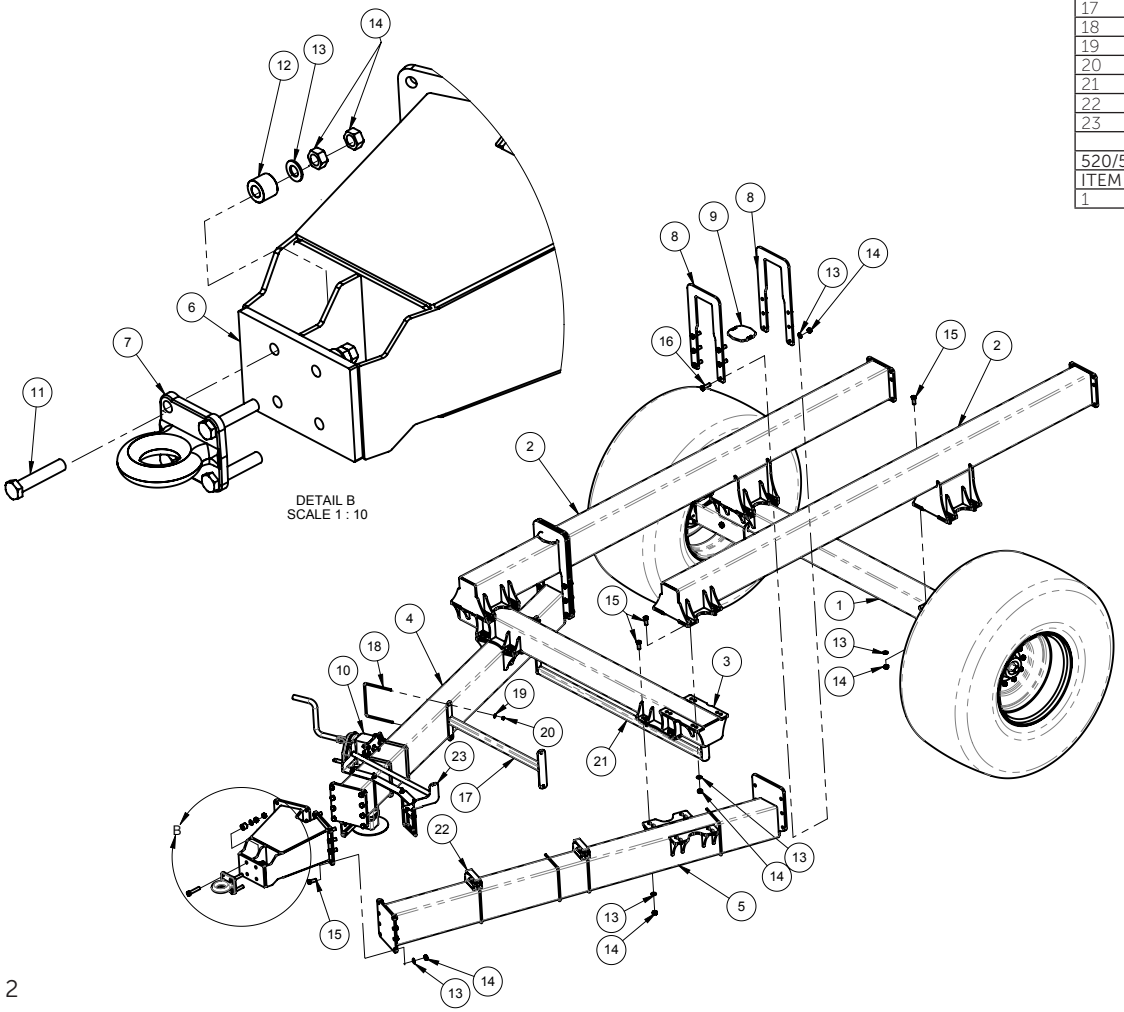

Parts Description:
630 Tow Behind Nova Frame

ITEM	QTY.	PART NO.	DESCRIPTION
1	1	500140	BDL, REAR AXLE - NOVA - DUAL 710/70R38
2	2	503290	ASSY, RAIL - SIDE - T/B NOVA - BLK
3	1	500190-1	ASSY, BEAM - FRT CROSS - NOVA - BLK
4	1	503280	ASSY, BEAM - FRONT HITCH - LH - T/B NOVA - BLK
5	1	503285	ASSY, BEAM - FRONT HITCH - RH - T/B NOVA - BLK
6	4	500165	PLATE, CLAMP 1/2 IN - U-CLAMP - NOVA - BLK
7	2	500166	PLATE, SHIM 1/2 IN - U-CLAMP - NOVA - BLK
8	84	250452	NUT, HEX - 7/8 UNC PL
9	80	250553	WASHER, FLAT 7/8IN GR8 PL
10	12	250044	BOLT, HEX 7/8 X 3 IN UNC GR5 PL
11	64	250006	BOLT, HEX 7/8 X 2 1/4 UNC GR5 PL
12	4	250029	BOLT, HEX 7/8 X 4 1/2 UNC GR5 PL
13	4	250234	BOLT, U-SQ - 1/2 UNC X 12 ID X 10 IN - 2IN THD - GR8 PL
14	8	250555	WASHER, FLAT - 1/2 IN - GR8 - PL
15	8	250450	NUT, HEX 1/2 UNC GR5 PL
16	1	500205	BDL, HITCH JACK - NOVA
17	1	500170	ASSY, FRT HITCH TONGUE - NOVA - BLK
18	1	254513	DRAWBAR - HOLLAND - DB-100FQ1
19	4	404225	BUSH, 1 3/4OD X .9ID X 1 3/8 IN - FRONT CASTOR
20	2	500230	BDL, HYD HOSE HOLDERS - FRONT HITCH - NOVA
21	1	500955	ASSY, CRADLE - MID HITCH - 2 1/2 HOSES - NOVA - BLK
22	1	500950	ASSY, CRADLE - MID HITCH - REAR - 2 1/2 HOSES - NOVA - BLK
23	1	501895-1	BDL , DISTRIBUTION PIPES HITCH GUIDE - NOVA - BLK

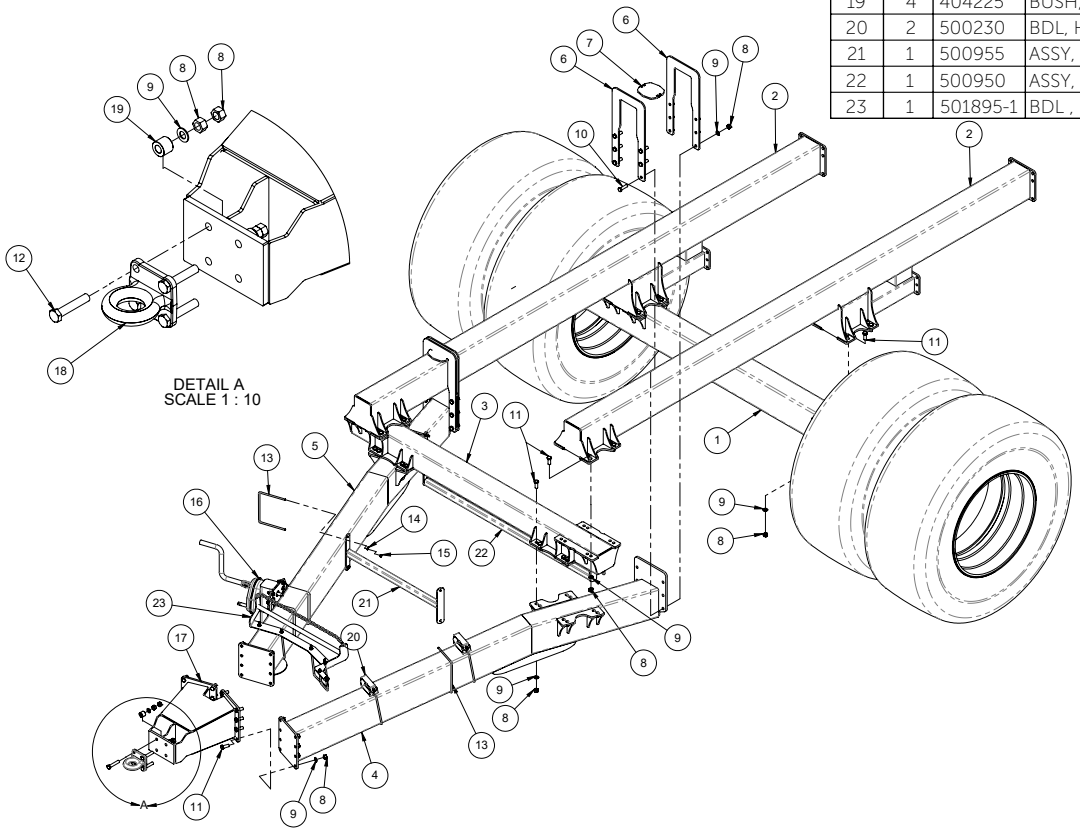

Parts Description:
780/820 Nova Frame

ITEM	QTY.	PART NO.	DESCRIPTION
1	1	500140	BDL, REAR AXLE - NOVA - DUAL 710/70R38
2	2	500100-1	ASSY, RAIL - SIDE - FRAME - NOVA - BLK
3	1	500190-1	ASSY, BEAM - FRT CROSS - NOVA - BLK
4	1	500150	ASSY, BEAM - FRONT HITCH - RH - NOVA - BLK
5	1	500151	ASSY, FRONT HITCH - LH - NOVA
6	1	500170	ASSY, FRT HITCH TONGUE - NOVA - BLK
7	1	254513	DRAWBAR - HOLLAND - DB-100FQ1
8	4	500165	PLATE, CLAMP 1/2 IN - U-CLAMP - NOVA - BLK
9	2	500166	PLATE, SHIM 1/2 IN - U-CLAMP - NOVA - BLK
10	1	500205	BDL, HITCH JACK - NOVA
11	4	250029	BOLT, HEX 7/8 X 4 1/2 UNC GR5 PL
12	4	404225	BUSH, 1 3/4OD X .9ID X 1 3/8 IN - FRONT CASTOR
13	80	250553	WASHER, FLAT 7/8IN GR8 PL
14	84	250452	NUT, HEX - 7/8 UNC PL
15	64	250006	BOLT, HEX 7/8 X 2 1/4 UNC GR5 PL
16	12	250044	BOLT, HEX 7/8 X 3 IN UNC GR5 PL
17	2	500230	BDL, HYD HOSE HOLDERS - FRONT HITCH - NOVA
18	1	500950	ASSY, CRADLE - MID HITCH - REAR - 2 1/2 HOSES - NOVA -BLK
19	1	500955	ASSY, CRADLE - MID HITCH - 2 1/2 HOSES - NOVA - BLK
20	4	250234	BOLT, U-SQ - 1/2 UNC X 12 ID X 8 IN - 2 IN THD - GR5 PL
21	8	250555	WASHER, FLAT - 1/2 IN - GR8 - PL
22	8	250450	NUT, HEX 1/2 UNC GR5 PL
23	1	501895	BDL , DISTRIBUTION PIPES HITCH GUIDE - NOVA - BLK
780/820 NOVA FRAME WITH TRACKS (SUBSTITUTE ITEMS BELOW)			
ITEM	QTY.	PART NO.	DESCRIPTION
1	1	500125	BDL, TRACK SYS - CAMOPLAST - NOVA - 100-3612

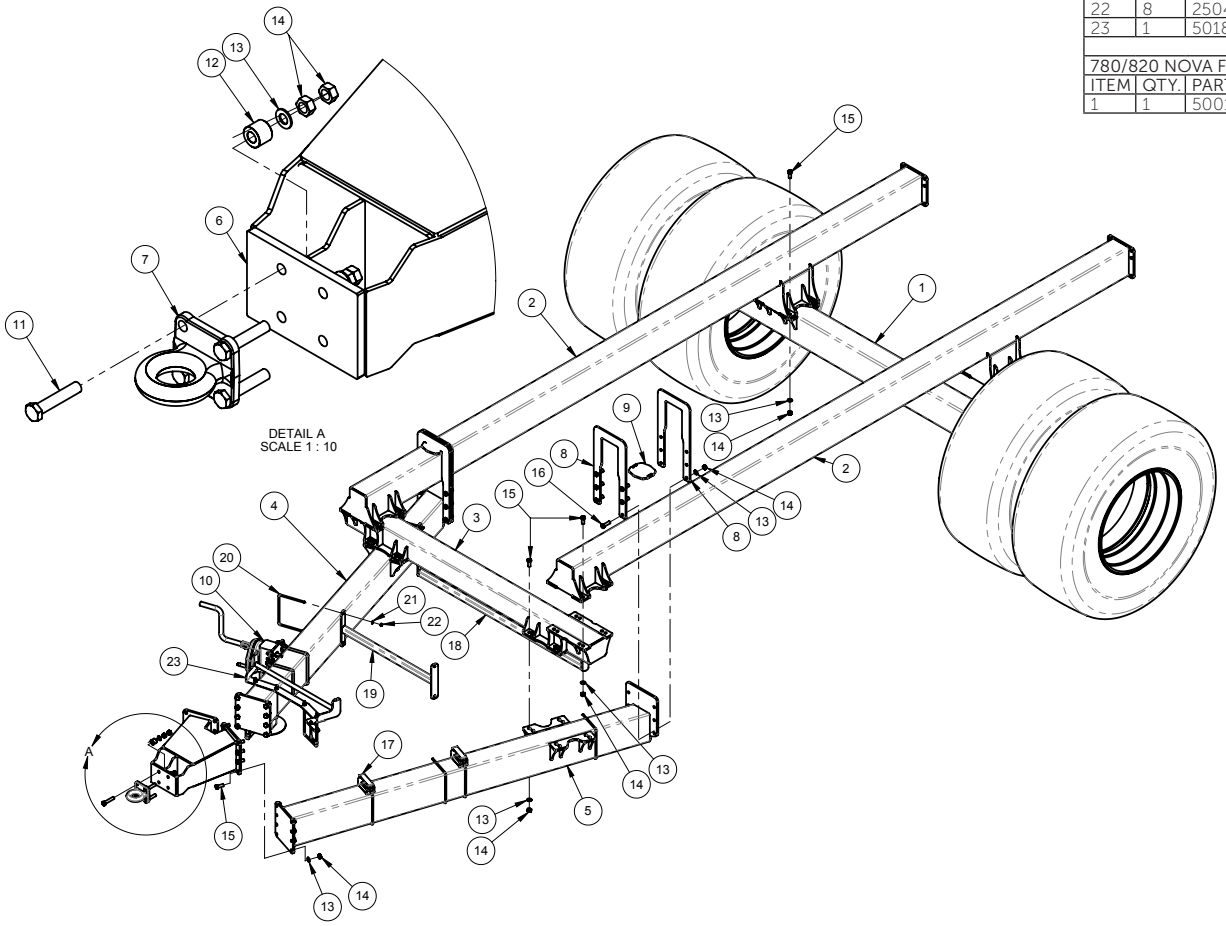

Parts Description:
630 T/B Nova Frame

ITEM	QTY.	PART NO.	DESCRIPTION
1	2	503290	ASSY, RAIL - SIDE - T/B NOVA - BLK
2	1	500140	BDL, REAR AXLE - NOVA - DUAL 710/70R38
3	1	500190-1	ASSY, BEAM - FRT CROSS - NOVA - BLK
4	1	503280	ASSY, BEAM - FRONT HITCH - LH - T/B NOVA - BLK
5	1	503285	ASSY, BEAM - FRONT HITCH - RH - T/B NOVA - BLK
6	1	503295	ASSY, FRT HITCH TONGUE - TOW BETWEEN NOVA - BLK
7	1	503305	ASSY, FRONT PIVOT TONGUE - T/B NOVA
8	4	500165	PLATE, CLAMP 1/2 IN - U-CLAMP - NOVA - BLK
9	2	500166	PLATE, SHIM 1/2 IN - U-CLAMP - NOVA - BLK
10	1	503194-1	BDL, HOSE HOLDER - FRT HITCH - T/B NOW
11	1	503310-2	BDL, REAR HITCH - T/B NOVA
12	1	503360	BDL, HITCH JACK - T/B NOVA
13	80	250452	NUT, HEX - 7/8 UNC PL
14	80	250553	WASHER, FLAT 7/8IN GR8 PL
15	12	250044	BOLT, HEX 7/8 X 3 IN UNC GR5 PL
16	64	250006	BOLT, HEX 7/8 X 2 1/4 UNC GR5 PL
17	4	250008	BOLT, HEX 7/8 X 4 UNC GR5 PL
18	1	503259-1	BDL, ZONE COMMAND - COMPRESSED AIR SYSTEM MNT
TOW BEHIND NOVA (SUBSTITUTE ITEMS BELOW)			
ITEM	QTY.	PART NO.	DESCRIPTION
10	1	400319-1	BDL, HOSE HOLDER - FRT HITCH

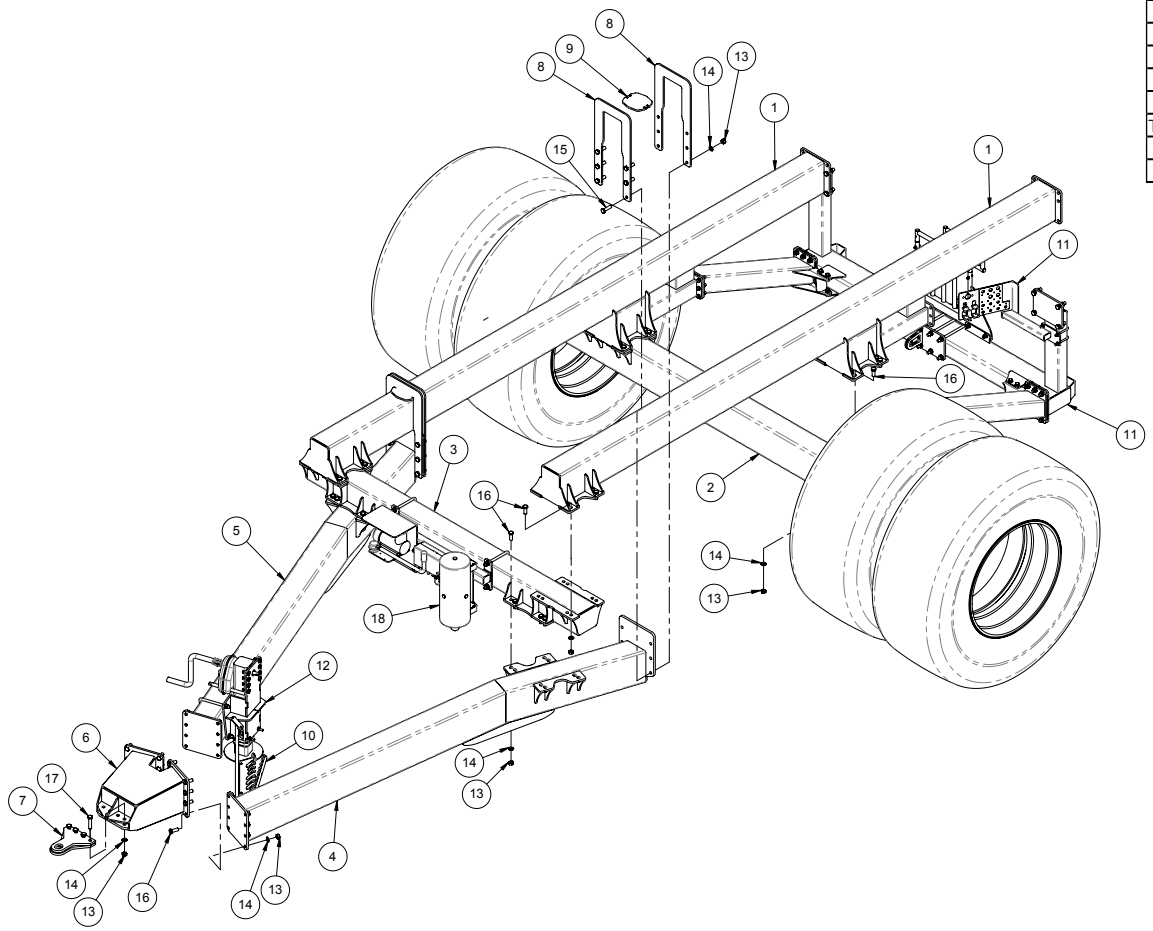

Parts Description:
780 T/B Nova Frame

ITEM	QTY.	PART NO.	DESCRIPTION
1	2	503358	ASSY, RAIL - SIDE - NOVA 780 BU - TBW - BLK
2	1	500190-1	ASSY, BEAM - FRT CROSS - NOVA - BLK
3	1	503378	ASSY, BEAM - FRONT HITCH - LH - NOVA 780BU - TBW - BLK
4	1	503362	ASSY, BEAM - FRONT HITCH - RH - NOVA 780 BU - TBW - BLK
5	1	503295	ASSY, FRT HITCH TONGUE - TOW BETWEEN NOVA - BLK
6	1	503305	ASSY, FRONT PIVOT TONGUE - T/B NOVA
7	4	500165	PLATE, CLAMP 1/2 IN - U-CLAMP - NOVA - BLK
8	2	500166	PLATE, SHIM 1/2 IN - U-CLAMP - NOVA - BLK
9	1	503194-1	BDL, HOSE HOLDER - FRT HITCH - T/B NOVA
10	1	503310-2	BDL, REAR HITCH - T/B NOVA
11	1	503360	BDL, HITCH JACK - T/B NOVA
12	82	250452	NUT, HEX - 7/8 UNC PL
13	82	250553	WASHER, FLAT 7/8IN GR8 PL
14	12	250044	BOLT, HEX 7/8 X 3 IN UNC GR5 PL
15	66	250006	BOLT, HEX 7/8 X 2 1/4 UNC GR5 PL
16	4	250008	BOLT, HEX 7/8 X 4 UNC GR5 PL
17	1	503259-1	BDL, ZONE COMMAND - COMPRESSED AIR SYSTEM MNT/HDW - T/B NOVA
18	1	500140	BDL, REAR AXLE - NOVA - DUAL 710/70R38

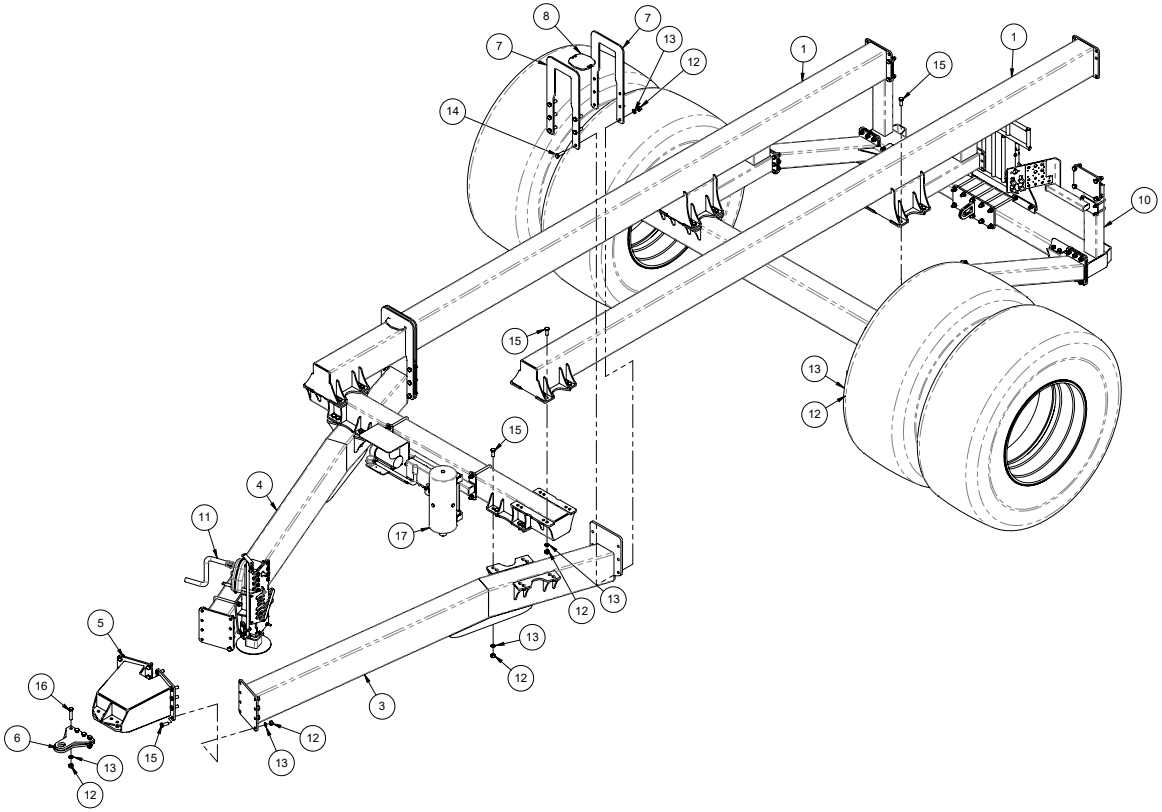

Parts Description:

Hitch Jack

Part Number: 500205

ITEM	QTY.	PART NO.	DESCRIPTION
1	1	254506	JACK, HITCH - NOVA
2	1	500200-3	ASSY, HITCH JACK MNT - NOVA - BLK
3	1	400421	PLATE, 1/4 IN - HOSE HOLDER - BLK
4	1	400327	ASSY, LOCK BAR - HOSE HOLDER - BLK
5	2	250232	BOLT, U-SQ - 3/4 UNC X 12 ID X 10 IN - 2 IN THD - GR8
6	4	250552	WASHER, FLAT 3/4IN GR8 PL
7	4	250451	NUT, HEX 3/4 UNC GR5 PL
8	16	250550	WASHER, FLAT 5/8 IN GR8 PL
9	8	250455	NUT, HEX 5/8 UNC GR5 PL
10	8	250047	BOLT, HEX 5/8 X 2 UNC GR5 PL
11	1	250200	BOLT, U-SQ - 1/2 UNC X 4 ID X 8 IN - 2 IN THD - GR5 PL
12	2	250555	WASHER, FLAT - 1/2 IN - GR8 - PL
13	2	250450	NUT, HEX 1/2 UNC GR5 PL
14	1	250594	PIN, QUICK/LOCK - 1/4 X 1 3/4 IN EFF - ROUND
15	1	254507	HANDLE, LANDING JACK - NOVA
16	1	250077	BOLT, HEX 3/8 X 2 1/2 IN GR5 PL
17	1	250503	NUT, LOCK - 3/8 UNC - STOVER - PL
18	2	250557	WASHER, FLAT - 3/8 IN GR8 PL
19	1	250033	BOLT, HEX 1/4 X 1 IN GR5 PL
20	7	250559	WASHER, FLAT - 1/4 IN - PL
21	3	250507	NUT, LOCK - 1/4 UNC - STOVER - PL
22	2	250078	BOLT, HEX - 1/4 X 1 1/2 UNC GR 5 PL
23	1	259116	DECAL, HOSE HOLDER - FRT HITCH

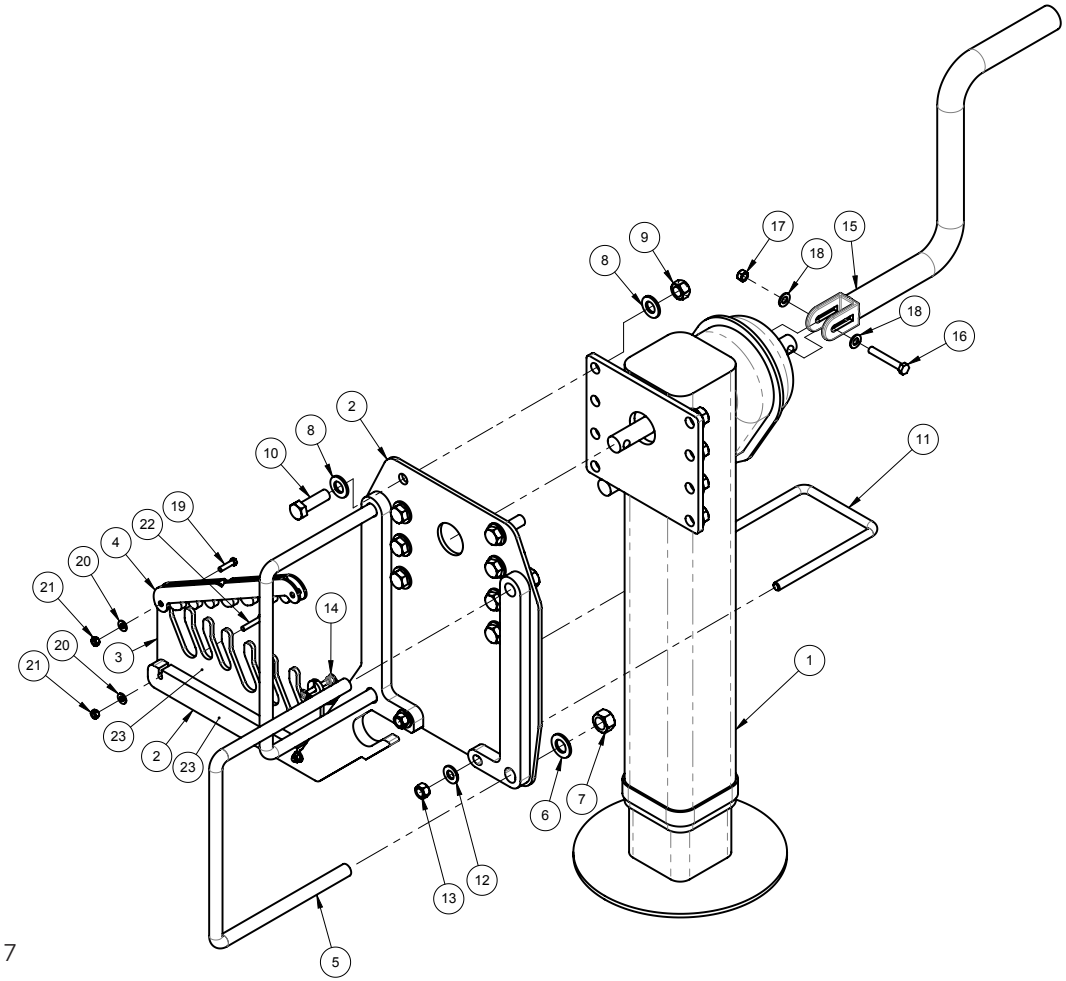

Parts Description:

Hitch Jack - T/B Nova

Part Number: 503360

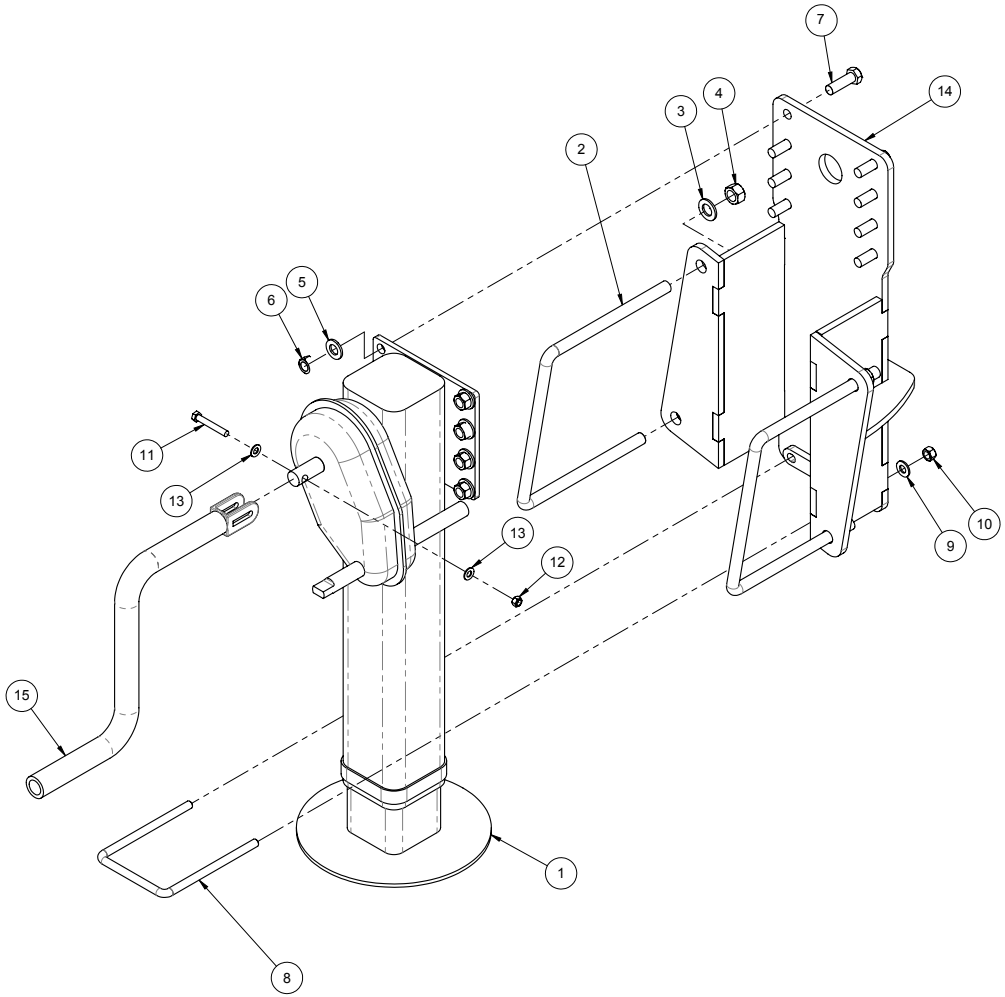

ITEM	QTY.	PART NO.	DESCRIPTION
1	1	254506	JACK, HITCH - NOVA
2	2	250232	BOLT, U-SQ - 3/4 UNC X 12 ID X 10 IN - 2 IN THD - GR8 PL
3	4	250552	WASHER, FLAT 3/4IN GR8 PL
4	4	250451	NUT, HEX 3/4 UNC GR5 PL
5	16	250550	WASHER, FLAT 5/8 IN GR8 PL
6	8	250455	NUT, HEX 5/8 UNC GR5 PL
7	8	250047	BOLT, HEX 5/8 X 2 UNC GR5 PL
8	1	250200	BOLT, U-SQ - 1/2 UNC X 5 1/4 ID X 8 IN - 2 IN THD - GR8 PL
9	2	250555	WASHER, FLAT - 1/2 IN - GR8 - PL
10	2	250450	NUT, HEX 1/2 UNC GR5 PL
11	1	250077	BOLT, HEX 3/8 X 2 1/2 IN GR5 PL
12	1	250503	NUT, LOCK - 3/8 UNC - STOVER - PL
13	2	250557	WASHER, FLAT - 3/8 IN GR8 PL
14	1	503365	ASSY, JACK MNT - T/B NOVA - BLK
15	1	254507	HANDLE, LANDING JACK - NOVA

Parts Description:

Hitch Hose Holder

Part Number: 500230

ITEM	QTY.	PART NO.	DESCRIPTION
1	1	500231	ASSY, HOSE HOLDER - FRONT HITCH - NOVA - BLK
2	1	500235	PLATE, FRMD 10GA - HOSE HOLDER TOP - FRT HITCH
3	1	250234	BOLT, U-SQ - 1/2 UNC X 12 ID X 8 IN - 2 IN THD - GR5 PL
4	2	250555	WASHER, FLAT - 1/2 IN - GR8 - PL
5	2	250450	NUT, HEX 1/2 UNC GR5 PL
6	2	250101	BOLT, CARRIAGE - 3/8 X 1 1/4 IN UNC GR5 PL
7	2	250400	NUT, FLANGE - 3/8 UNC PL

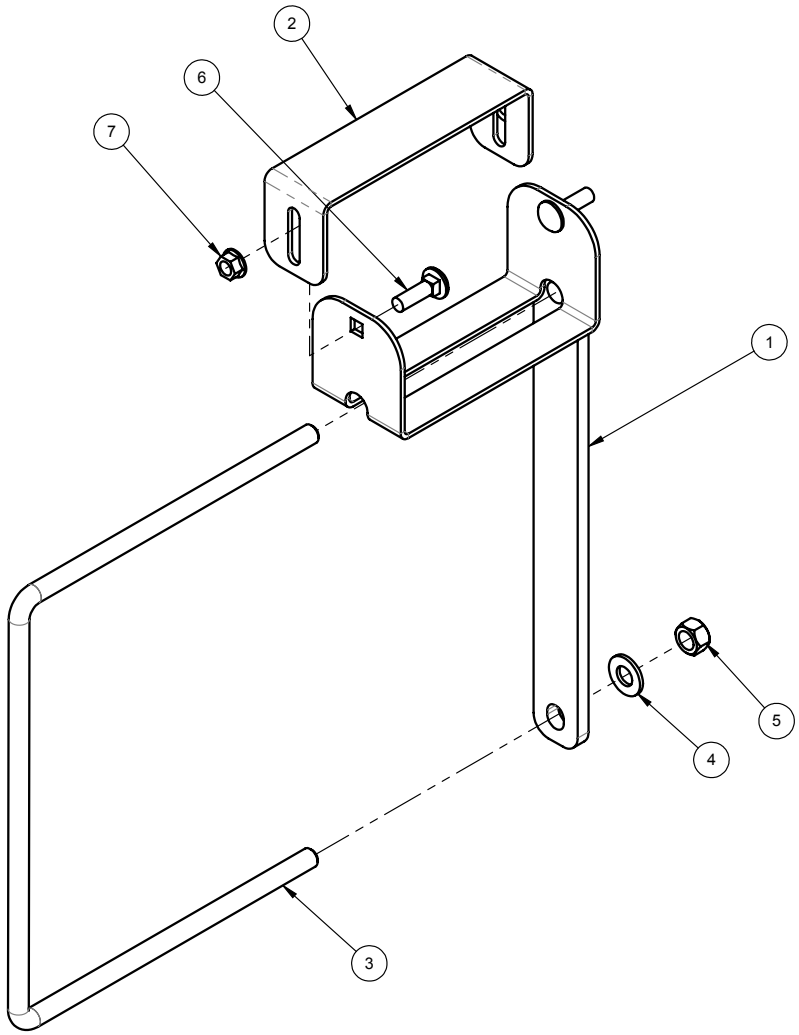

Parts Description:

Hitch Hose Holder - T/B Nova

Part Number: 503194-1

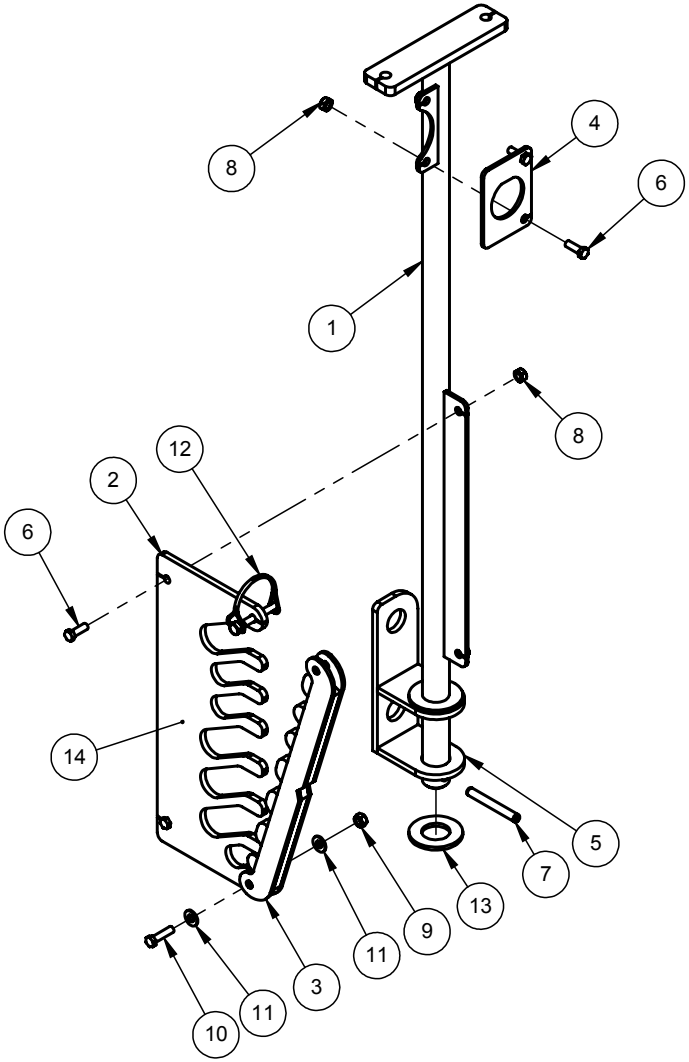

ITEM	QTY.	PART NO.	DESCRIPTION
1	1	503195-3	ASSY, HOSE HOLDER - FRT HITCH - T/B NOVA - BLK
2	1	400421	PLATE, 1/4 IN - HOSE HOLDER - BLK
3	1	400327	ASSY, LOCK BAR - HOSE HOLDER - BLK
4	1	400422	SHEET, 10 GA - ISO BULKHEAD - BLK
5	1	503496	ASSY, HOSE HOLDER MNT - T/B NOVA - BLK
6	4	250122	BOLT, HEX 1/4 X 3/4 IN GR5 PL
7	1	250600	PIN, SPRING - 5/16 X 2 1/2 IN - PL
8	4	250458	NUT, HEX - 1/4 UNC PL
9	1	250507	NUT, LOCK - 1/4 UNC - STOVER - PL
10	1	250033	BOLT, HEX 1/4 X 1 IN GR5 PL
11	3	250559	WASHER, FLAT - 1/4 IN - PL
12	1	250594	PIN, QUICK/LOCK - 1/4 X 1 3/4 IN EFF - ROUND
13	1	250554	WASHER, FLAT - 1 IN GR8 PL
14	1	259116	DECAL, HOSE HOLDER - FRT HITCH

Parts Description:

Distribution Pipes Hitch Guide

Part Number: 501895-1

ITEM	QTY.	PART NO.	DESCRIPTION
1	1	501996	ASSY, DISTRIBUTION PIPES HITCH GUIDE
2	1	250223	BOLT, U-SQ - 1/2 UNC X 4 ID X 6 IN - 2 IN T
3	2	250233	BOLT, U-SQ - 1/2 UNC X 8 ID X 14 IN - 2IN
4	8	250450	NUT, HEX 1/2 UNC GR5 PL
5	8	250555	WASHER, FLAT - 1/2 IN - GR8 - PL
6	1	254565	CHAIN, 5/16 IN G70 - GOLD
7	1	254566	CHAIN, SNAP LINK 5/16 IN G70 - GOLD
8	37	254561	CHAIN, 1/4 IN - GRADE 40 - PL

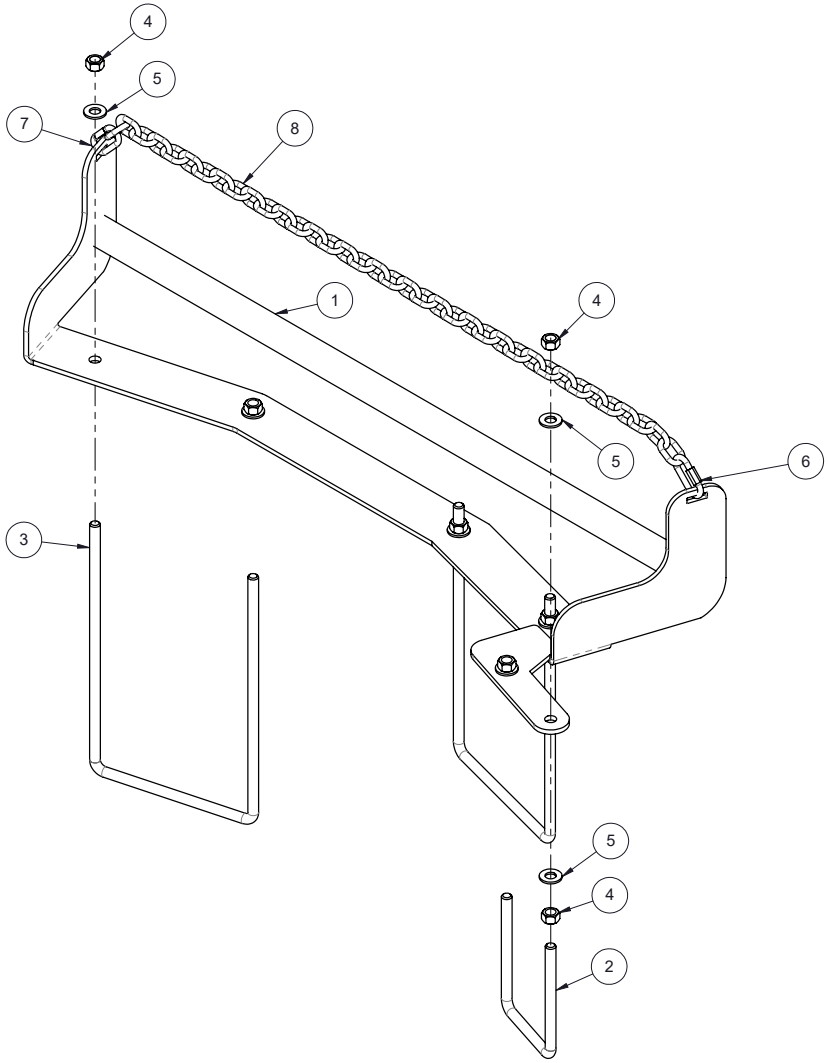

Parts Description:

Nova Electric Panel

Part Number: 500330-2

ITEM	QTY.	PART NO.	DESCRIPTION
1	1	500597-3	PLATE, FRMD 10GA - AIR/ELEC HOUSING
2	1	500602-4	PLATE, FRMD 10GA - PANEL COVER - A
3	2	500605-1	ASSY, MOUNT - AIR/ELEC HOUSING - NO
4	2	250694	PURCH. - STANLEY 4X4 IN SS HINGE
5	2	250693	LATCH, PULL T-HANDLE DRAW AND KE
6	8	250129	MACHINE SCREW - #8-32
7	8	250182	WASHER, FLAT - M8
8	8	250634	NUT, MACHINE 10-32 - PLATED
9	8	250122	BOLT, HEX 1/4 X 3/4 IN GR5 PL
10	8	250559	WASHER, FLAT - 1/4 IN PL
11	8	250507	NUT, LOCK - 1/4 UNC - STOVER - PL
12	4	250552	WASHER, FLAT 3/4IN GR8 PL
13	4	250451	NUT, HEX 3/4 UNC GR5 PL
14	2	250220	BOLT, U-SQ - 3/4 UNC X 8 ID X 10 IN -2 IN
15	8	250013	BOLT, HEX 1/2 X 1 1/4 IN GR5 PL
16	8	250555	WASHER, FLAT - 1/2 IN - GR8 - PL
17	8	250450	NUT, HEX 1/2 UNC GR5 PL

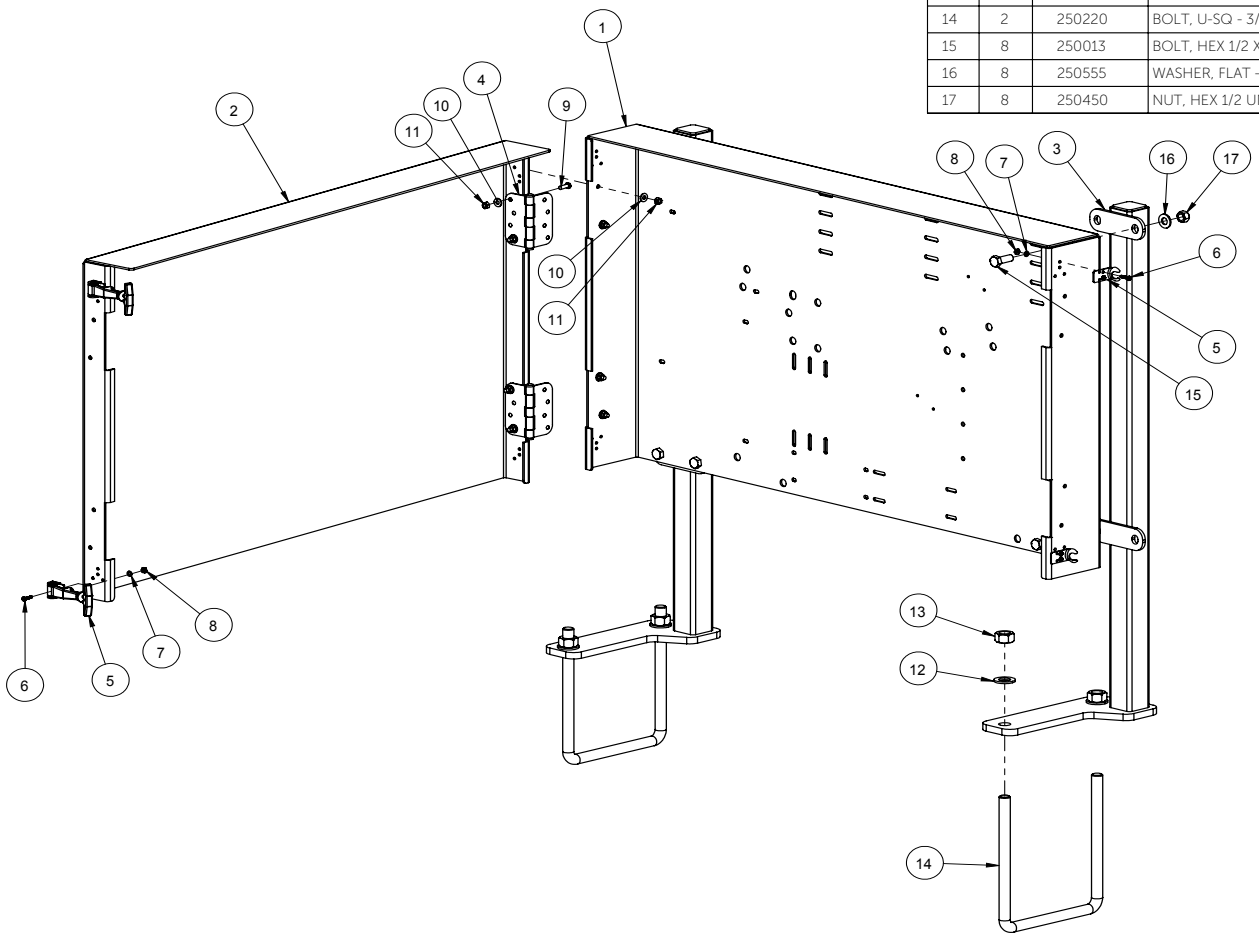

Parts Description:

T/B Nova Electric Panel

Part Number: 502502-2

ITEM	QTY.	PART NO.	DESCRIPTION
1	1	502500-1	ASSY, TANK PANEL MOUNT - YEL
2	2	250208	BOLT, U-SQ - 1/2 UNC X 4 ID X 5 IN - 2 IN THD - GR8 PL
3	8	250555	WASHER, FLAT - 1/2 IN - GR8 - PL
4	8	250450	NUT, HEX 1/2 UNC GR5 PL
5	4	250001	BOLT, HEX 1/2 X 1 1/2 IN GR5 PL
6	1	500597-3	PLATE, FRMD 10GA - AIR/ELEC HOUSING
7	1	500602-4	PLATE, FRMD 10GA - PANEL COVER - AIR/ELEC HO
8	2	250694	PURCH. - STANLEY 4X4 IN SS HINGE
9	2	250693	LATCH, PULL T-HANDLE DRAW AND KEEPER
10	8	250633	SCREW, MACHINE 10-32 X 1 IN - PLATED
11	8	250679	WASHER, 10-32 PL
12	8	250634	NUT, MACHINE 10-32 - PLATED
13	8	250122	BOLT, HEX 1/4 X 3/4 IN GR5 PL
14	8	250559	WASHER, FLAT - 1/4 IN PL
15	8	250507	NUT, LOCK - 1/4 UNC - STOVER - PL

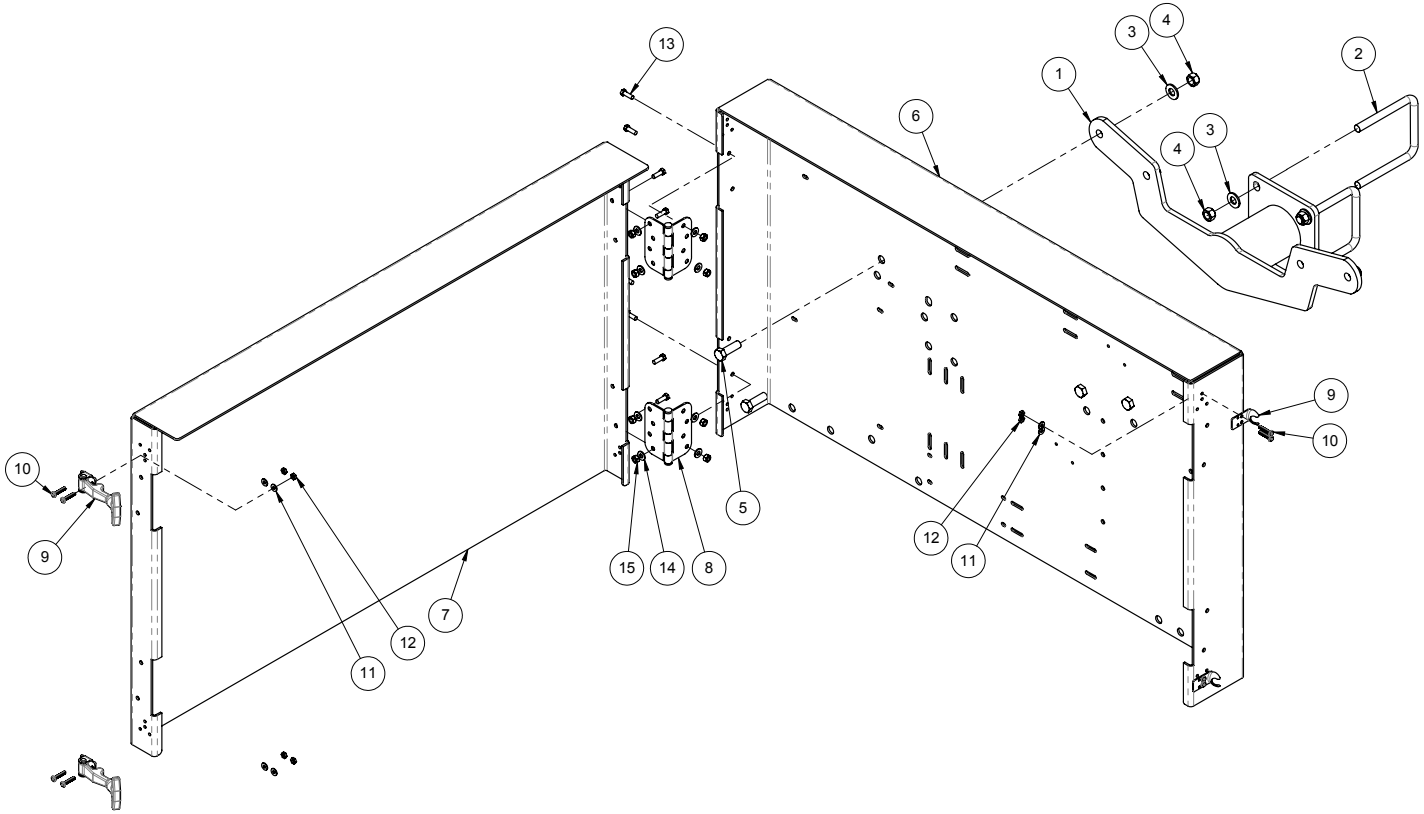

Parts Description:

Axle - Single 800/65R32

Part Number: 500141

ITEM	QTY.	PART NO.	DESCRIPTION
1	2	255084	ASSY, TIRE - 800/65R32 DYNA TORQUE RADIAL - 172A8
2	2	252004	ASSY, HUB/SPINDLE-H1020-4 1/2IN STRAIGHT SPINDLE
3	1	501530	ASSY, REAR AXLE - NOVA - 520 BU - BLK
4	2	250075	BOLT, HEX 1 X 9 UNC GR5 PL
5	2	250505	NUT, LOCK - 1 UNC - STOVER - PL
6	2	250554	WASHER, FLAT - 1 IN GR8 PL
7	20	253036	NUT, WHEEL - 3/4 UNF FLANGE

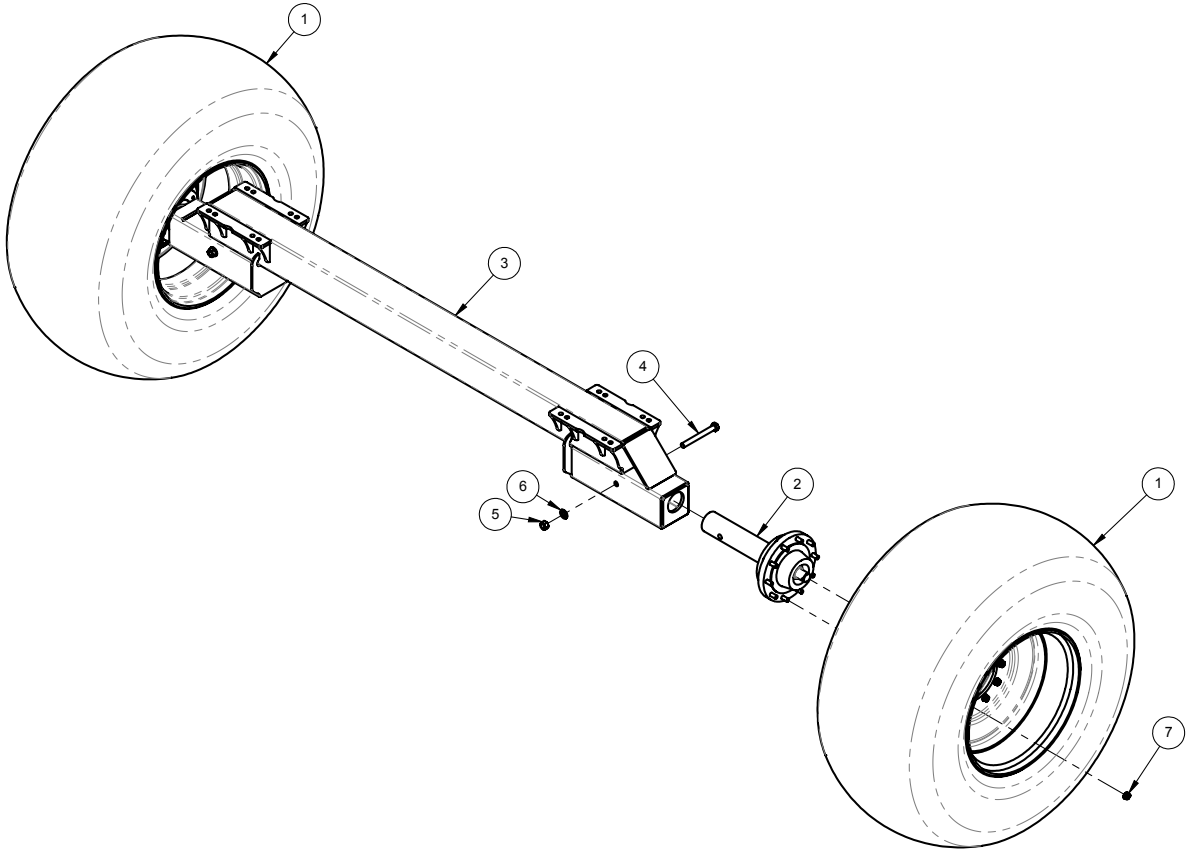

Parts Description:

Axle - Dual 710/70R38

Part Number: 500140

ITEM	QTY.	PART NO.	DESCRIPTION
1	2	250075	BOLT, HEX 1 X 9 UNC GR5 PL
2	2	250505	NUT, LOCK - 1 UNC - STOVER - PL
3	2	250554	WASHER, FLAT - 1 IN GR8 PL
4	2	252005	ASSY, HUB/SPINDLE - H1030 - 6 IN STRAIGHT SPINDLE
5	20	253041	NUT, WHEEL - 7/8 UNF FLANGE
6	4	255086-2	ASSY, TIRE - 710/70R38 - 177A8 R1W - DUAL RIM
7	1	500130	ASSY, REAR AXLE - NOVA - BLK
8	6	500144	PLATE, 3/4 IN - WHEEL CLAMP - 10 BOLT - PLATED

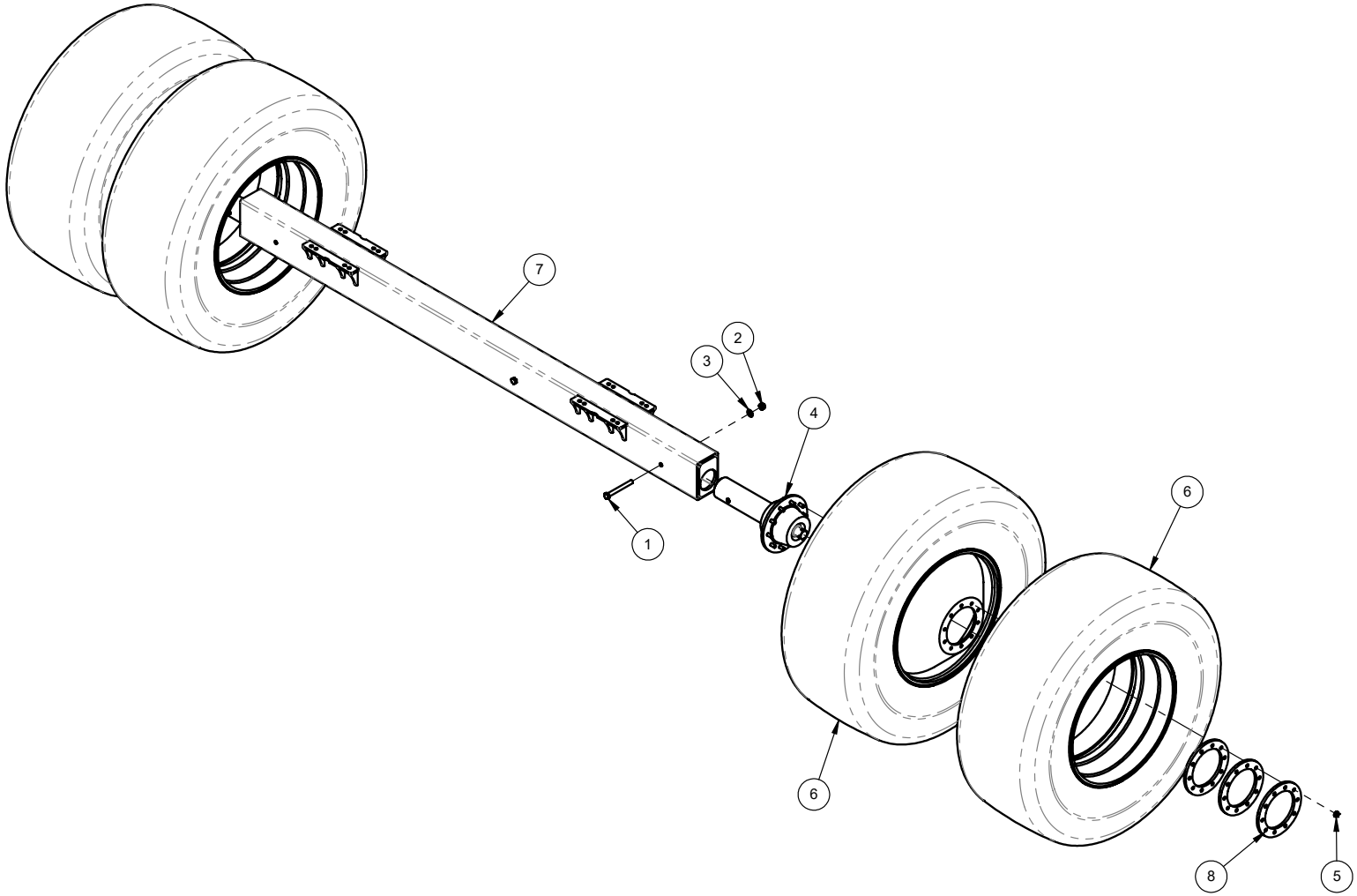

Parts Description:

Clearance Lights

Part Number: 500315-1

ITEM	QTY.	PART NO.	DESCRIPTION
1	1	500310-2	ASSY, ADJUSTABLE MNT - CLEARANCE LIGHT - NOVA - BLK
2	2	250013	BOLT, HEX 1/2 X 1 1/4 IN GR5 PL
3	2	250213	BOLT, U-SQ - 1/2 UNC X 6ID X 5 1/2 IN - 2 IN THD - GR5 PL
4	4	250555	WASHER, FLAT - 1/2 IN - GR8 - PL
5	4	250450	NUT, HEX 1/2 UNC GR5 PL
6	1	400177	WELD, EXTENSION - SIGNAL LIGHT - RIGHT - BLK
7	1	400184	WELD, EXTENSION - SIGNAL LIGHT - LEFT - BLK
8	1	257303	LAMP - CLEARANCE - AMBER LED
9	1	500349	SHEET, FRMD 10 GA - CLAMP - TAIL LIGHT - NOVA - BLK
10	1	500343	SHEET, FRMD 10 GA - BRACKET - TAIL LIGHT - NOVA - BLK
11	1	257304	LAMP - CLEARANCE - RED LED
12	4	250557	WASHER, FLAT - 3/8 IN GR8 PL
13	2	250077	BOLT, HEX 3/8 X 2 1/2 IN GR5 PL
14	2	250503	NUT, LOCK - 3/8 UNC - STOVER - PL
15	2	250559	WASHER, FLAT - 1/4 IN PL
16	1	250033	BOLT, HEX 1/4 X 1 IN GR5 PL
17	1	250507	NUT, LOCK - 1/4 UNC - STOVER - PL

NOTES:

-USE HARDWARE BAG 500327-2
-QTY'S SHOWN ARE FOR ONE SIDE ONLY

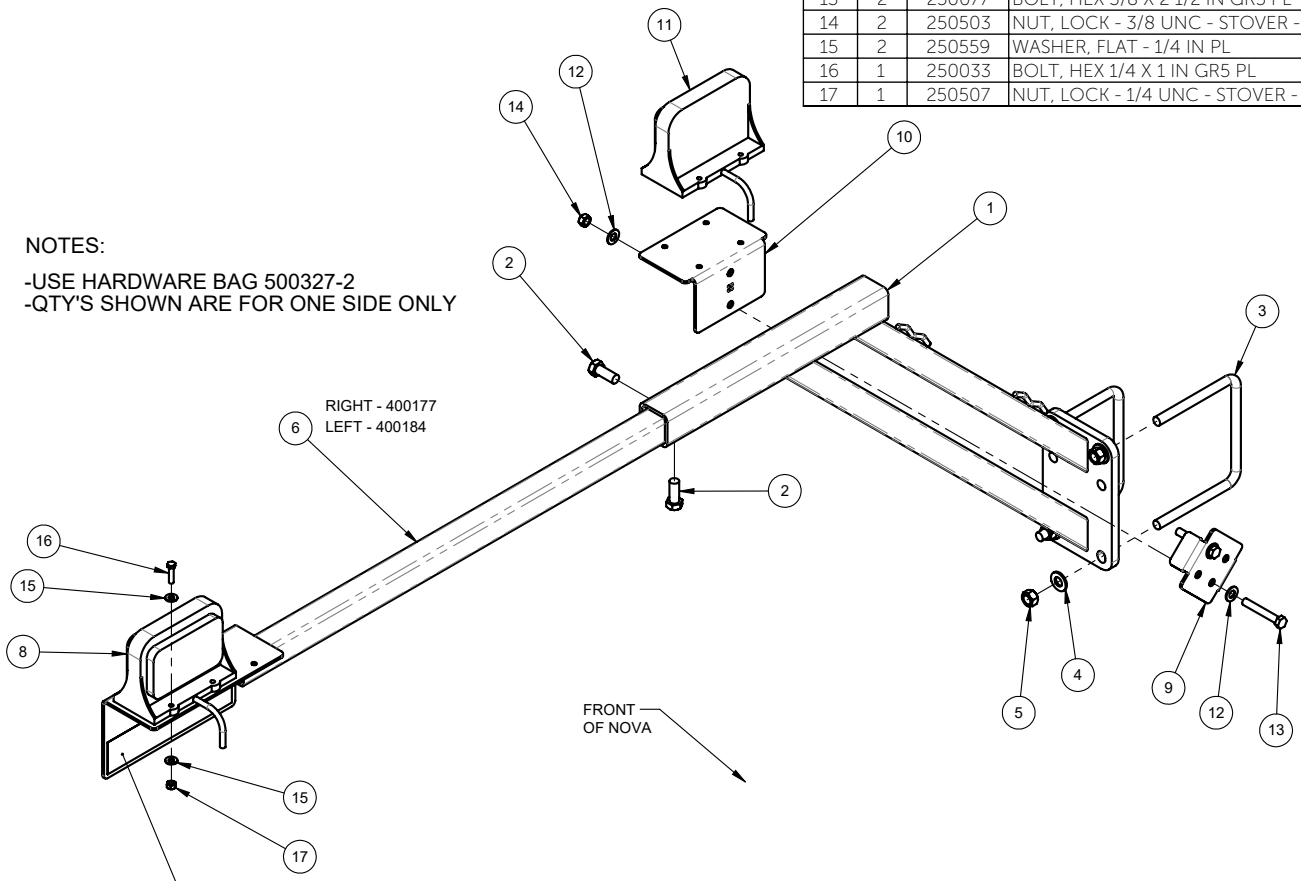

YELLOW REFLECTOR INSTALLED ON FRONT FACE OF 6

RED & ORANGE INSTALLED ON REAR FACE

Parts Description:

Rear Hitch - 520/780 Nova

Part Number: 501001

ITEM	QTY.	PART NO.	DESCRIPTION
1	1	501040-1	ASSY, REAR HITCH RH - 780BU NOVA - BLK
2	1	501035-1	ASSY, REAR HITCH LH - 780BU NOVA - BLK
3	1	501044	PLATE, BOLT 3/4 IN - 8 X 6 REAR HITCH
4	2	400488-1	PLATE, SPACER 3/4 IN - REAR HITCH
5	1	400489-1	PLATE, TOP 3/4 IN - REAR HITCH
6	4	250003	BOLT, HEX 3/4 X 2 1/2 UNC GR5 PL
7	4	250552	WASHER, FLAT 3/4IN GR8 PL
8	4	250501	NUT, LOCK - 3/4 UNC - STOVER - PL
9	1	250553	WASHER, FLAT 7/8IN GR8 PL
10	1	250502	NUT, LOCK - 3/4 UNC - STOVER - PL
11	1	250008	BOLT, HEX 7/8 X 4 UNC GR5 PL

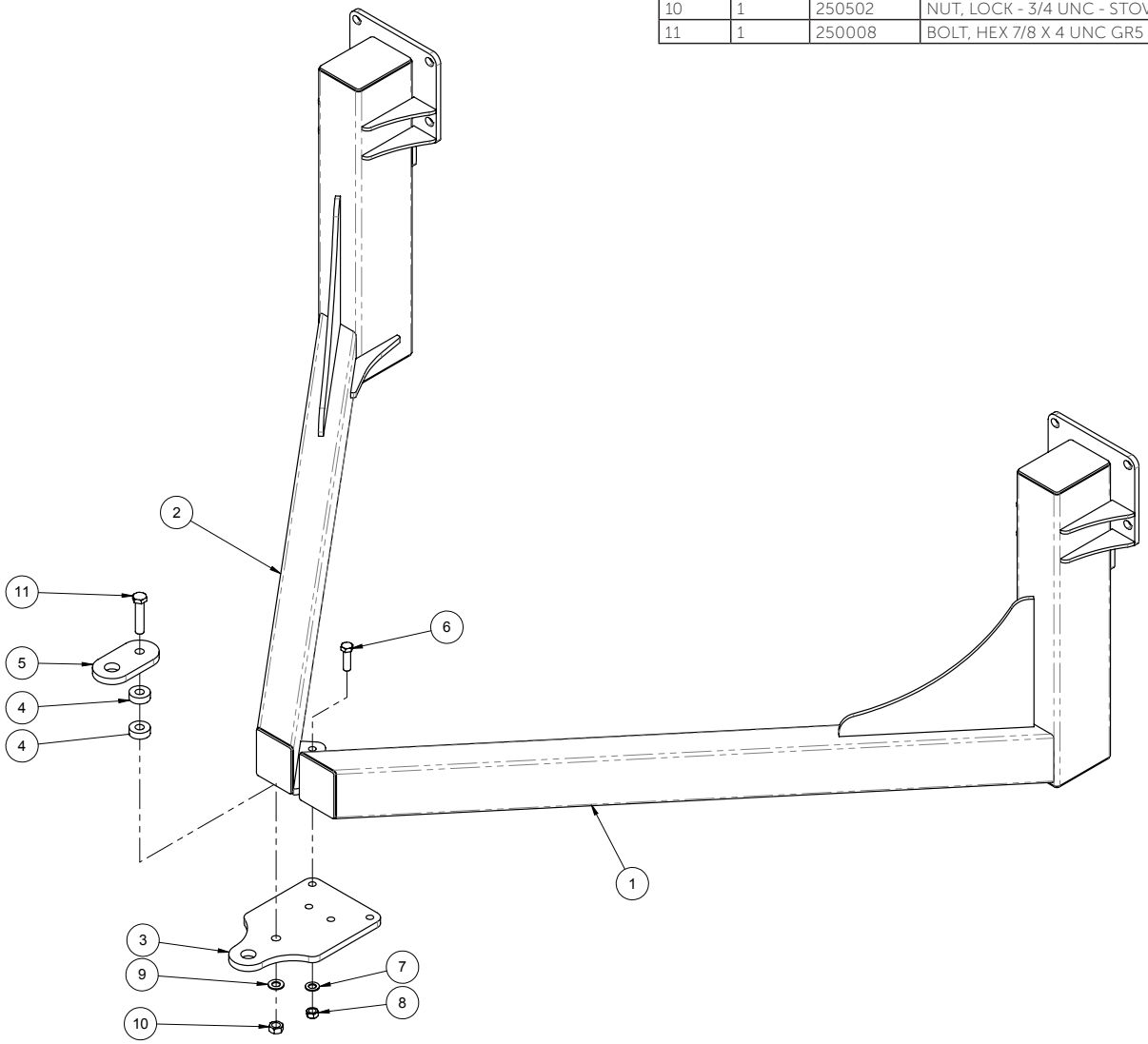

Parts Description:

Rear Hitch - 560/820 Nova

Part Number: 501300

ITEM	QTY.	PART NO.	DESCRIPTION
1	1	501305	ASSY, FLOATING HITCH CROSS BRACE - NOVA
2	2	501310	ASSY, FLOATING REAR HITCH - 820 NOVA
3	1	501325	ASSY, FLOATING REAR HITCH - ANG. CROSS BEAM
4	1	501330	ASSY, FLOATING REAR HITCH TONGUE
5	2	501340	PLATE, GUIDE 5/8 IN - NOVA REAR FLOATING HITCH
6	2	501341-1	PLATE, FRMD 3/8 IN - FLOATING REAR HITCH GUIDE RETAINING PLATE
7	8	250004	BOLT, HEX 3/4 X 2 3/4 UNC GR5 PL
8	24	250552	WASHER, FLAT 3/4IN GR8 PL
9	24	250451	NUT, HEX 3/4 UNC GR5 PL
10	8	250201	BOLT, U-SQ - 3/4 UNC X 4 ID X 6 IN - 2 IN THD - GR5 PL
11	2	250223	BOLT, U-SQ - 1/2 UNC X 4 ID X 6 IN - 2 IN THD - GR5 PL
12	4	250555	WASHER, FLAT - 1/2 IN - GR8 - PL
13	4	250450	NUT, HEX 1/2 UNC GR5 PL
14	2	250032	BOLT, HEX 1 X 4 IN UNC GR5 PL
15	4	250554	WASHER, FLAT - 1 IN GR8 PL
16	4	250505	NUT, LOCK - 1 UNC - STOVER - PL
17	2	250031	BOLT, HEX 1 X 3 1/2 IN GR5 PL

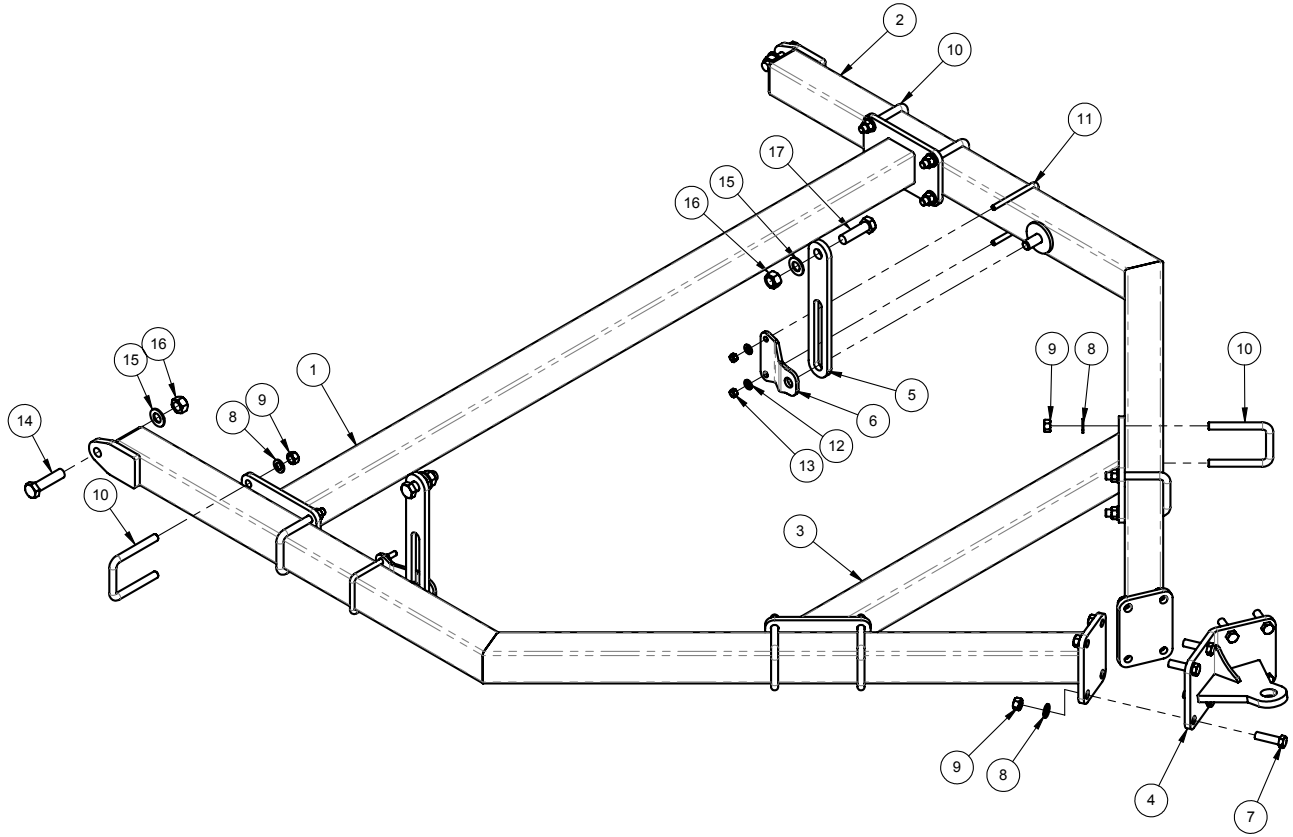

Parts Description:

Rear Hitch - 630 T/B Nova

Part Number: 503310-2

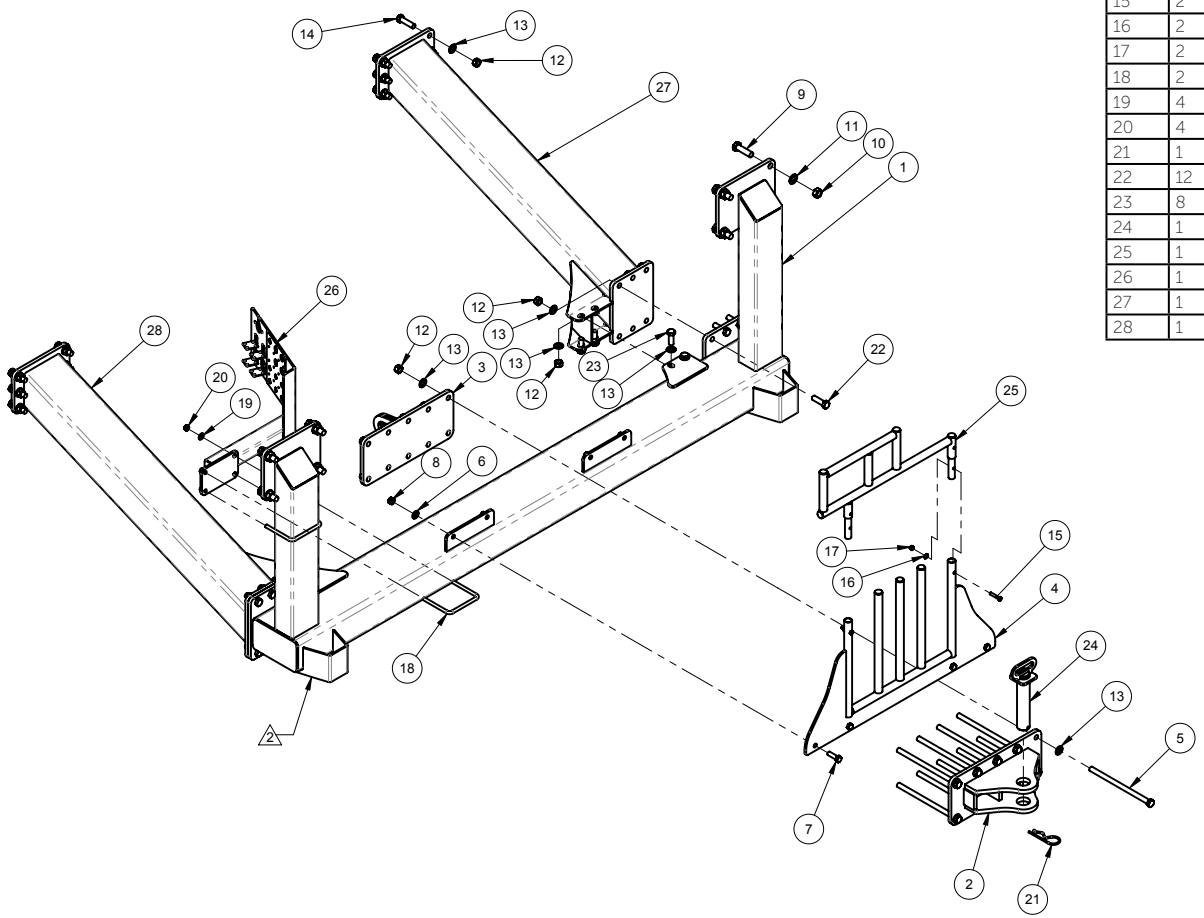

ITEM	QTY.	PART NO.	DESCRIPTION
1	1	503320-4	ASSY, MAIN BEAM - REAR HITCH - T/B NOVA - BLK
2	1	503335	ASSY, REAR CLEVIS - T/B NOVA - BLK
3	1	503340	ASSY, CLAMP PLATE - REAR CLEVIS - T/B NOVA - BLK
4	1	503345-1	ASSY, DELIVERY HOSE GUIDE - T/B NOVA - BLK
5	10	250112	BOLT, HEX 3/4 X 13 UNC GR5 PL
6	4	250550	WASHER, FLAT 5/8 IN GR8 PL
7	4	250047	BOLT, HEX 5/8 X 2 UNC GR5 PL
8	4	250455	NUT, HEX 5/8 UNC GR5 PL
9	8	250044	BOLT, HEX 7/8 X 3 IN UNC GR5 PL
10	8	250452	NUT, HEX - 7/8 UNC PL
11	8	250553	WASHER, FLAT 7/8IN GR8 PL
12	42	250451	NUT, HEX 3/4 UNC GR5 PL
13	60	250552	WASHER, FLAT 3/4IN GR8 PL
14	12	250004	BOLT, HEX 3/4 X 2 3/4 UNC GR5 PL
15	2	250040	BOLT, HEX 3/8 X 2IN GR5 PL
16	2	250557	WASHER, FLAT - 3/8 IN GR8 PL
17	2	250453	NUT, HEX - 3/8 UNC PL
18	2	250213	BOLT, U-SQ - 1/2 UNC X 4 ID X 5 IN - 2 IN THD - GR8
19	4	250555	WASHER, FLAT - 1/2 IN - GR8 - PL
20	4	250450	NUT, HEX 1/2 UNC GR5 PL
21	1	250627	HAIRPIN, 1/4 X 5 IN - HITCH PIN
22	12	250003	BOLT, HEX 3/4 X 2 1/2 UNC GR5 PL
23	8	250014	BOLT, HEX 3/4 X 2 UNC GR5 PL
24	1	503315-1	ASSY, REAR HITCH PIN - T/B NOVA - BLK
25	1	503312	ASSY, HYD-ELEC GUIDE - T/B NOVA - BLK
26	1	503755-1	ASSY, QUICK COUPLING - T/B NOVA - BLK
27	1	503390	ASSY, RIGHT BEAM - REAR HITCH - T/B NOVA - BLK
28	1	503395	ASSY, LEFT BEAM - REAR HITCH - T/B NOVA - BLK

THIS PAGE LEFT INTENTIONALLY BLANK

Parts Description:

Meter Box - Standard Tank

Part Number: 500450-5

ITEM	PART NO.	QTY.	DESCRIPTION
1	250109	6	BOLT, CARRIAGE - 3/8 X 1 1/4 IN UNC - STAINLESS
2	250464	4	NUT, HEX - 3/8 UNC GR5 JS500
3	250569	6	WASHER, FLAT - 3/8 IN SS
4	256579	8	CELLTITE SPONGE - 1/4 X 3/4 IN
5	250172	6	NUT, LOCK - 1/4 UNC 18.8 SS
6	250643-1	2	BUSHING, NOVA METER 5/8 HEX - J4
7	250568	14	WASHER, FLAT - 1/4 IN SS
8	250645	2	RETAINING RING, E-TYPE 5/8 IN - STAINLESS STEEL
9	250169	2	BOLT, CARRIAGE - 1/4 X 3/4 UNC 18.8 S.S.
10	501911	1	ASSY, GEAR - INTERMEDIATE - NOVA METER
11	501913	1	ASSY, HOUSING - PIVOT ARM BEARING - NOVA METER
12	501916	1	ASSY, GEAR - IDLER - NOVA METER
13	501914	1	PLATE, FRMD 1/4 - GEAR CONTROL ARM - NOVA METER - S.S.
14	501919	1	SPACER, PIVOT ARM - NOVA METER - SS
15	250474	4	BOLT, SHCS - 1/4 - 20 X 1/2 - PL
16	250476	1	BOLT, HEX - 1/2 X 1 1/2" - UNC - S.S.
17	250478	4	SHIM, 1/2" ID X 3/4 OD X 0.125 THICK - SS
18	250477	1	NUT, LOCK - 1/2 UNC - THIN - PL
19	501920	1	ASSY, METER ROLLER - NOVA RETROFIT
20	501924	2	HOUSING, METER BUSHING - SS
21	250479	2	O-RING, 2-327 - BUNA-N - X-PROFILE
22	250665	2	WASHER, THRUST 1.57 OD X 1.03 ID X 0.038 T - SHIM IGUS M250
23	500455-6	1	ASSY, METER HOUSING - S.S. - NOVA
24	400965	1	IDLER, BUSHING - CHAIN - 75D - 1 1/2OD X 7/16 ID X 2 3/8 IN
25	250072	1	BOLT, HEX 3/8 X 3 IN GR5 PL
26	250503	1	NUT, LOCK - 3/8 UNC - STOVER - PL
27	260521	1	ELBOW, 90D - 1/8 NPT M X 1/4IN PUSH ON - AIR
28	250641-1	1	SHAFT, 5/8 HEX - NOVA METER ROLLER SHAFT
29	500487	2	SHEET, BUSHING HOUSING CLAMP 10GA - STAINLESS
30	500493	1	SHEET, 20GA - NOVA METER HEX SHIM - SS
31	500484-1	1	SHEET, FRMD10 GA - CLEAN OUT - STAINLESS - NOVA
32	501891-1	1	GEAR, METER ROLLER - 27T - 5/8 IN HEX BORE
33	260572	1	CYL, AIR - 1 X 1 - PARKER - 1.06DPSRS X 1.00 - C/W WIPER
34	260506	1	CLEVIS, ROD - AIR CYLINDER - IGUS GERI-05
35	260507	1	CLEVIS PIN, AIR CYLINDER - IGUS GEFM-08
36	250680	1	RETAINING RING, E-TYPE 1/4 IN - STAINLESS STEEL
37	500438-1	2	PLATE, 5/16 IN S.S. - ROLLER CLEANOUT
38	250531	2	NUT, WING - 3/8 UNC - STAINLESS
39	501930	1	SHEET, 10 GA - RETAINER WASHER - INTERMEDIATE GEAR - SS
40	250170	1	BOLT, HEX 1/4 X 1/2 IN UNC 18.8 SS

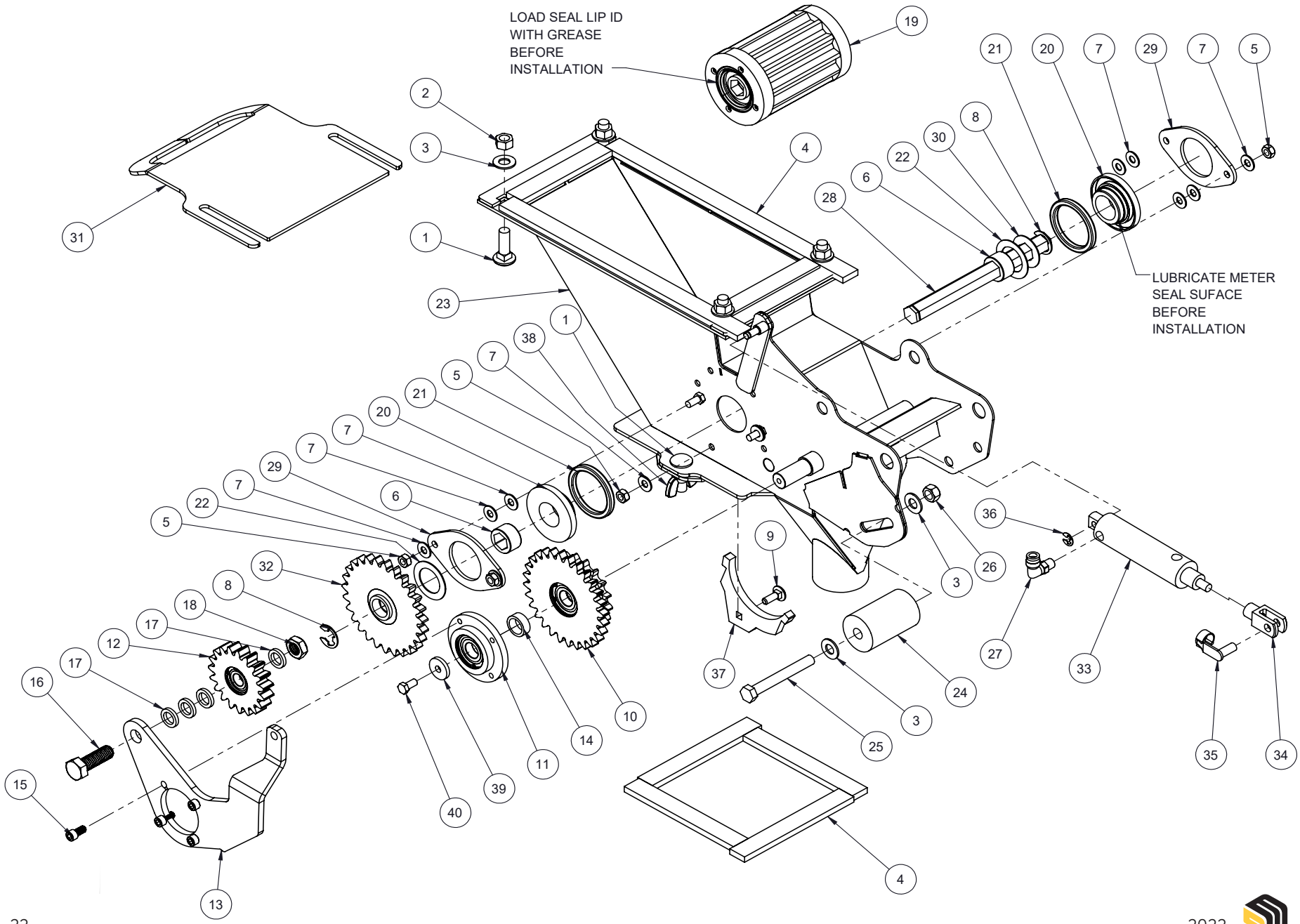
LOAD SEAL LIP ID WITH GREASE BEFORE INSTALLATION
LUBRICATE METER SEAL SUFACE BEFORE INSTALLATION
19
21
20
7
29
7
5
2
3
4
8
30
22
6
28
31
1
23
1
38
7
5
21
20
7
7
29
7
22
5
6
36
9
26
3
32
8
18
17
12
17
16
37
27
33
24
3
25
35
34
15
40
39
11
14
10
13
4

Parts Description:

Meter Box - Canola Tank

Part Number: 500451-5

ITEM	PART NO.	QTY.	DESCRIPTION
1	250109	6	BOLT, CARRIAGE - 3/8 X 1 1/4 IN UNC - STAINLESS
2	250464	4	NUT, HEX - 3/8 UNC GR5 JS500
3	250569	6	WASHER, FLAT - 3/8 IN SS
4	256579	8	CELLTITE SPONGE - 1/4 X 3/4 IN
5	250172	6	NUT, LOCK - 1/4 UNC 18.8 SS
6	250643-1	2	BUSHING, NOVA METER 5/8 HEX - J4
7	250568	14	WASHER, FLAT - 1/4 IN SS
8	250645	2	RETAINING RING, E-TYPE 5/8 IN - STAINLESS STEEL
9	250169	2	BOLT, CARRIAGE - 1/4 X 3/4 UNC 18.8 S.S.
10	501911	1	ASSY, GEAR - INTERMEDIATE - NOVA METER
11	501913	1	ASSY, HOUSING - PIVOT ARM BEARING - NOVA METER
12	501916	1	ASSY, GEAR - IDLER - NOVA METER
13	501914	1	PLATE, FRMD 1/4 - GEAR CONTROL ARM - NOVA METER - S.S.
14	501919	1	SPACER, PIVOT ARM - NOVA METER - SS
15	250474	4	BOLT, SHCS - 1/4 - 20 X 1/2 - PL
16	250476	1	BOLT, HEX - 1/2 X 1 1/2" - UNC - S.S.
17	250478	4	SHIM, 1/2" ID X 3/4 OD X 0.125 THICK - SS
18	250477	1	NUT, LOCK - 1/2 UNC - THIN - PL
19	501927	1	ASSY, METER ROLLER - LOW RATE - NOVA RETROFIT
20	501924	2	HOUSING, METER BUSHING - SS
21	250479	2	O-RING, 2-327 - BUNA-N - X-PROFILE
22	250665	2	WASHER, THRUST 1.57 OD X 1.03 ID X 0.038 T - SHIM IGUS M250
23	501930	1	SHEET, 10 GA - RETAINER WASHER - INTERMEDIATE GEAR - SS
24	250170	1	BOLT, HEX 1/4 X 1/2 IN UNC 18.8 SS
25	500455-6	1	ASSY, METER HOUSING - S.S. - NOVA
26	400965	1	IDLER, BUSHING - CHAIN - 75D - 1 1/2OD X 7/16 ID X 2 3/8 IN
27	250072	1	BOLT, HEX 3/8 X 3 IN GR5 PL
28	250503	1	NUT, LOCK - 3/8 UNC - STOVER - PL
29	260521	1	ELBOW, 90D - 1/8 NPT M X 1/4IN PUSH ON - AIR
30	250641-1	1	SHAFT, 5/8 HEX - NOVA METER ROLLER SHAFT
31	500487	2	SHEET, BUSHING HOUSING CLAMP 10GA - STAINLESS
32	500493	1	SHEET, 20GA - NOVA METER HEX SHIM - SS
33	500484-1	1	SHEET, FRMD10 GA - CLEAN OUT - STAINLESS - NOVA
34	501891-1	1	GEAR, METER ROLLER - 27T - 5/8 IN HEX BORE
35	260572	1	CYL, AIR - 1 X 1 - PARKER - 1.06DPSRS X 1.00 - C/W WIPER
36	260506	1	CLEVIS, ROD - AIR CYLINDER - IGUS GERI-05
37	260507	1	CLEVIS PIN, AIR CYLINDER - IGUS GEFM-08
38	250680	1	RETAINING RING, E-TYPE 1/4 IN - STAINLESS STEEL
39	500438-1	2	PLATE, 5/16 IN S.S. - ROLLER CLEANOUT
40	250531	2	NUT, WING - 3/8 UNC - STAINLESS

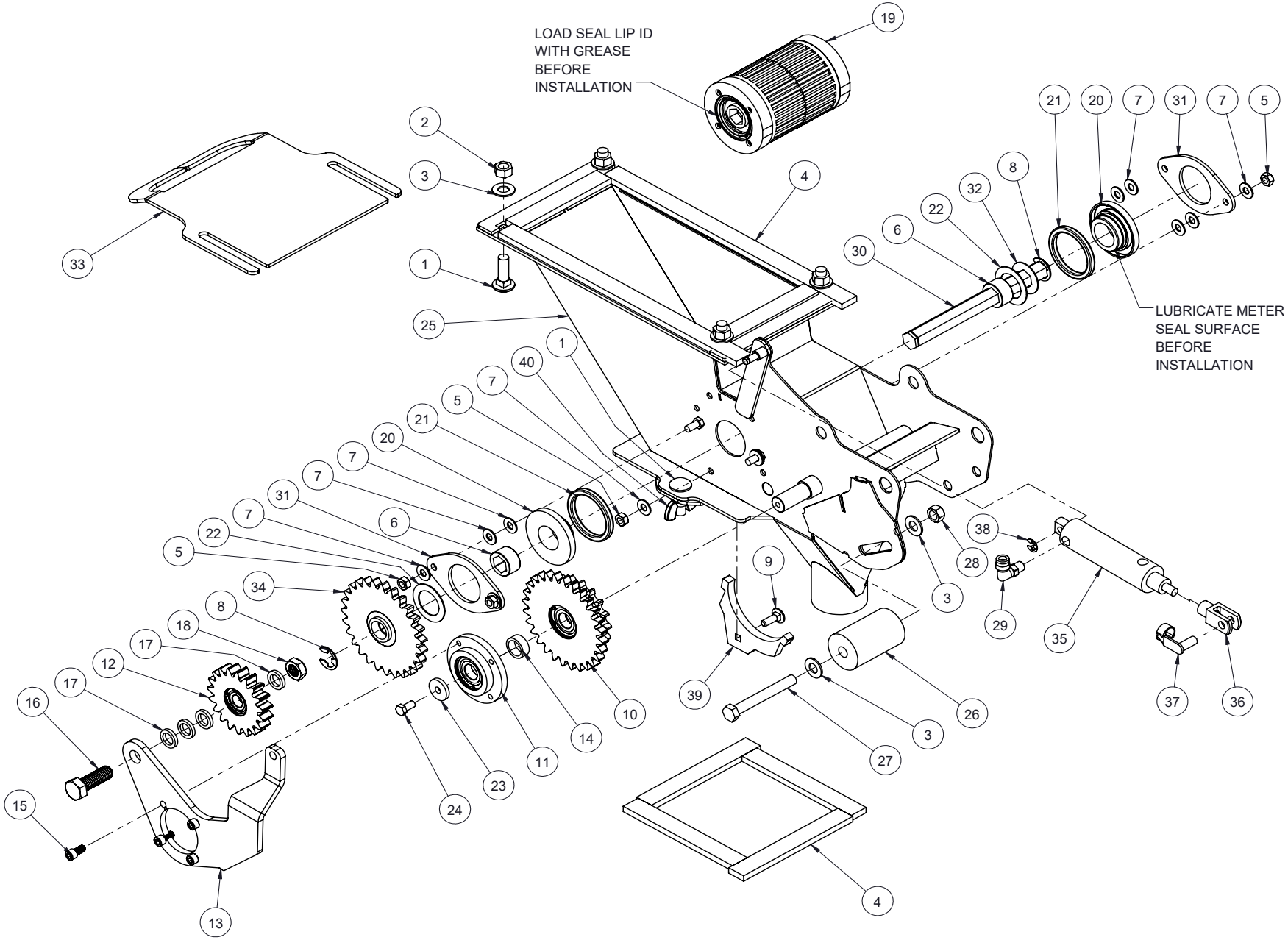
LOAD SEAL LIP ID WITH GREASE BEFORE INSTALLATION
LUBRICATE METER SEAL SURFACE BEFORE INSTALLATION
19
2
3
1
25
33
4
21
20
7
31
7
5
8
32
22
6
30
1
40
7
5
21
20
7
7
31
7
22
5
6
34
8
18
17
12
17
16
15
13
24
23
11
14
10
39
9
38
28
3
29
35
37
36
26
3
27
4

Parts Description:

Common Drive Shaft

Part Number: 503289 – 10 Zone
503286 – 08 Zone

ITEM	QTY.	PART NO.	DESCRIPTION
1	1	503287	SFT, DRIVE - HEX - 5/8 X 87 IN - STAINLESS - NOVA - HOLES
2	10	250019	BOLT, HEX 3/8 X 1 1/4 IN GR5 PL
3	10	250453	NUT, HEX - 3/8 UNC PL
4	10	250557	WASHER, FLAT - 3/8 IN GR8 PL
5	10	250630	SCREW, SET - 1/4 X 3/8 UNC
6	1	500410-2	ASSY, NOVA END METER BEARING PLATE
7	1	500494-3	ASSY, MOTOR MOUNT SUPPORT - STAINLESS - NOVA
8	10	501892-1	ASSY, HUB - COMPLETE COMMON DRIVE - NOVA METER
9	1	250122	BOLT, HEX 1/4 X 3/4 IN GR5 PL
10	1	250458	NUT, HEX - 1/4 UNC PL
11	1	250559	WASHER, FLAT - 1/4 IN PL
12	7	250643-1	BUSHING, NOVA METER 5/8 HEX - J4
13	14	250682	COLLAR, SFT 3/4 IN - SET SCREW - PLATED
14	5	500498	ASSY, BEARING HOLDER 10GA - STAINLESS
15	5	500483	SHEET, SPACER 10GA - BEARING HOLDER - STAINLESS
16	14	250685	WASHER, THRUST 1.42 OD X 0.79 ID X .060 - IGUS JTM-2036-015

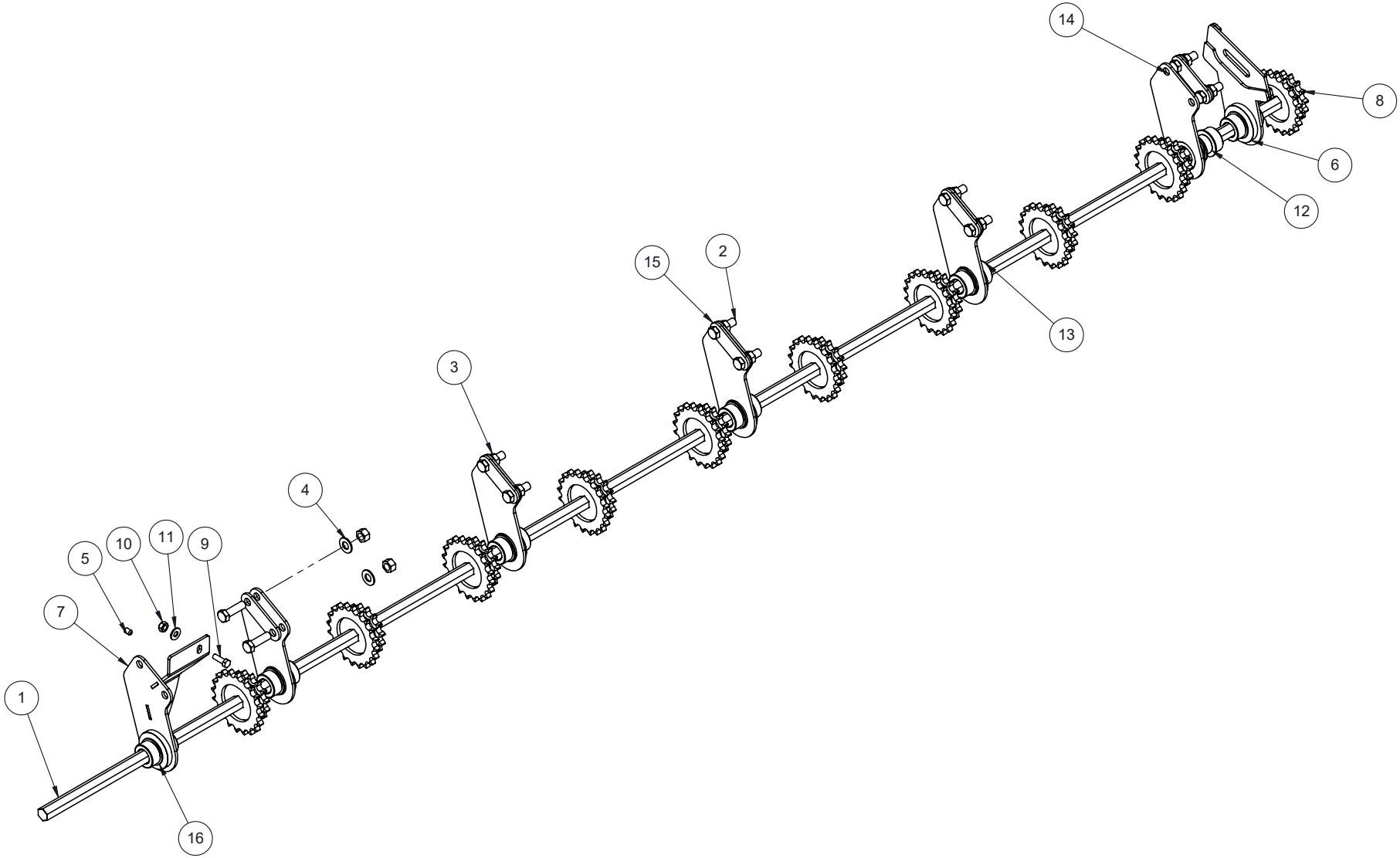
1
2
3
4
5
6
7
8
9
10
11
12
13
14
15
16

Parts Description:
Standard Gear Reduction Drive
Part Number: 503850

ITEM	QTY.	PART NO.	DESCRIPTION
1	1	503855-1	WELD, STANDARD METER DRIVE - NOVA SERIES II
2	1	260717	MOTOR, HYD - METER DRIVE - RAVEN 3/4 HEX DRIVE
3	1	503861-1	SHAFT, 1IN - PRIMARY - METER DRIVE - NOVA SERIES II
4	4	250872	BEARING, FLANGE - NOVA SERIES II - 1" SFT - UCFL205-100D1
5	1	503862-1	SHAFT, 1IN - SECONDARY - METER DRIVE - NOVA SERIES II
6	1	503863	PIPE, IDLER SPACER 1 - NOVA SERIES II
7	1	503864-1	PIPE, IDLER SPACER 2 - NOVA SERIES II
8	12	250001	BOLT, HEX 1/2 X 1 1/2 IN GR5 PL
9	22	250555	WASHER, FLAT - 1/2 IN - GR8 - PL
10	17	250504	NUT, LOCK - 1/2 UNC - STOVER - PL
11	2	250077	BOLT, HEX 3/8 X 2 1/2 IN GR5 PL
12	6	250557	WASHER, FLAT - 3/8 IN GR8 PL
13	5	250562	WASHER, FLAT 5/8 IN PL
14	1	250150	BOLT, HEX 5/8 X 8 UNC GR5 PL
15	2	250503	NUT, LOCK - 3/8 UNC - STOVER - PL
16	1	250500	NUT, LOCK 5/8 UNC - STOVER - PL
17	3	250048	BOLT, HEX 1/2 X 2 IN GR5 PL
18	2	250013	BOLT, HEX 1/2 X 1 1/4 IN GR5 PL
19	2	250019	BOLT, HEX 3/8 X 1 1/4 IN GR5 PL
20	2	250453	NUT, HEX - 3/8 UNC PL
21	6	250122	BOLT, HEX 1/4 X 3/4 IN GR5 PL
22	8	250559	WASHER, FLAT - 1/4 IN PL
23	6	250507	NUT, LOCK - 1/4 UNC - STOVER - PL
24	2	503888	SPROCKET, IDLER - 40T18 - 5/8 ID - NOVA SERIES II
25	2	503865	KEY, 1/4 X 1/4 X 2-1/16 IN
26	1	402948	KEY, 1/4 X 1/4 X 1 1/2 IN
27	1	503866	GEAR, DRIVE SHAFT - 20T - NOVA SERIES II
28	1	503867	GEAR, DRIVE SHAFT - 40T - NOVA SERIES II
29	1	503868	PIPE, IDLER SPACER 3 - NOVA SERIES II
30	1	503871	PLATE, 1/4 IN - MOTOR MOUNT - CHAIN REDUCTION - NOVA SERIES II
31	1	503893	WELD, COMMON DRIVE SUPPORT - CHAIN REDUCTION - NOVA SERIES II
32	1	503959	ADAPTOR, 5/8 IN HEX TO 1 IN BORE - CHAIN REDUCTION
33	1	503869	SPROCKET, DUAL - 15 AND 15 TOOTH - NOVA SERIES II
34	1	503948	SHEET, 14 GA - FRONT CHAIN GUARD - CHAIN REDUCTION - NOVA SERIES II
35	1	503947	SHEET, 14 GA - REAR CHAIN GUARD - CHAIN REDUCTION - NOVA SERIES II
36	1	503881	WELD, SPROCKET - 40T15 AND 40T28 - 5/8 IN HEX BORE
37	2	250682	COLLAR, SFT 3/4 IN - SET SCREW - PLATED
38	6	250740	SCREW, SET - 5/16 X 3/8 IN UNC PL
39	1	250630	SCREW, SET - 1/4 X 3/8 UNC
40	1	260874	VALVE, PWM - OMNISEED - C/W MANIFOLD - RAVEN
41	2	250081	BOLT, HEX 1/4 X 1 3/4 IN - GR5 PL
42	2	250458	NUT, HEX - 1/4 UNC PL

UPPER DRIVETRAIN

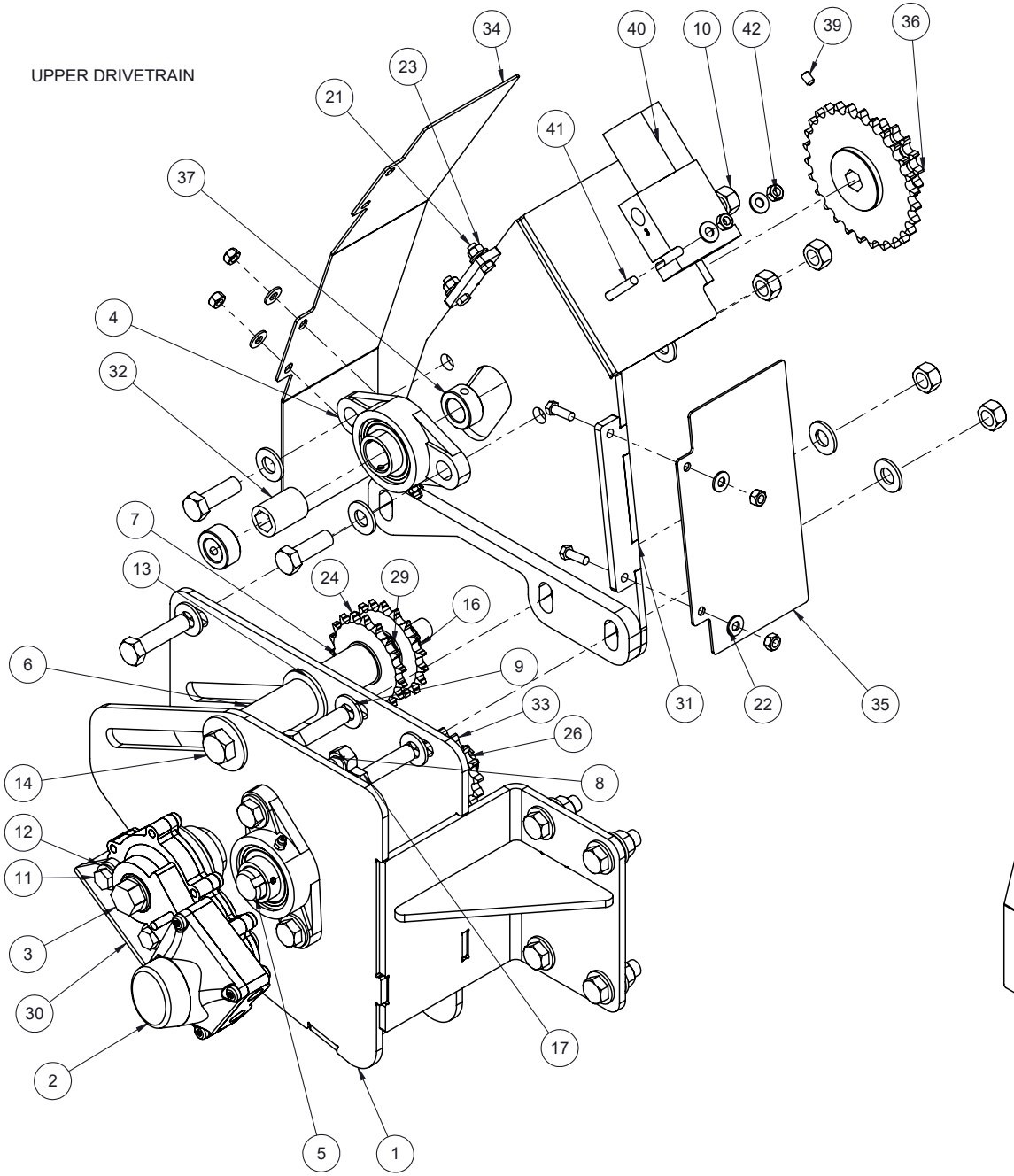

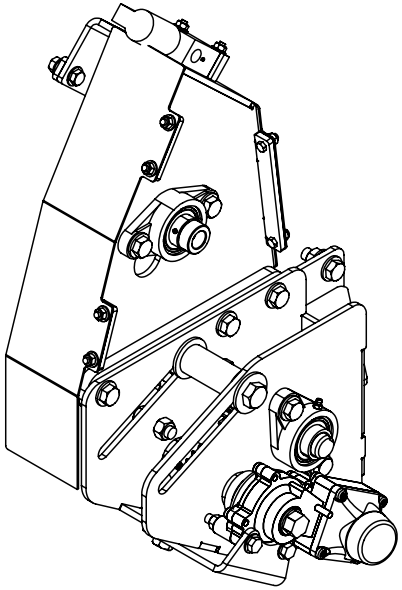

Parts Description:
Tow-Between Gear Reduction Drive
Part Number: 503854

ITEM	QTY.	PART NO.	DESCRIPTION
1	1	503855-1	WELD, STANDARD METER DRIVE - NOVA SERIES II
2	1	260717	MOTOR, HYD - METER DRIVE - RAVEN 3/4 HEX DRIVE
3	1	503861-1	SHAFT, 1IN - PRIMARY - METER DRIVE - NOVA SERIES II
4	4	250872	BEARING, FLANGE - NOVA SERIES II - 1" SFT - UCFL205-100D1
5	1	503862-1	SHAFT, 1IN - SECONDARY - METER DRIVE - NOVA SERIES II
6	1	503863	PIPE, IDLER SPACER 1 - NOVA SERIES II
7	1	503864-1	PIPE, IDLER SPACER 2 - NOVA SERIES II
8	12	250001	BOLT, HEX 1/2 X 1 1/2 IN GR5 PL
9	22	250555	WASHER, FLAT - 1/2 IN - GR8 - PL
10	17	250504	NUT, LOCK - 1/2 UNC - STOVER - PL
11	2	250077	BOLT, HEX 3/8 X 2 1/2 IN GR5 PL
12	6	250557	WASHER, FLAT - 3/8 IN GR8 PL
13	5	250562	WASHER, FLAT 5/8 IN PL
14	1	250150	BOLT, HEX 5/8 X 8 UNC GR5 PL
15	2	250503	NUT, LOCK - 3/8 UNC - STOVER - PL
16	1	250500	NUT, LOCK 5/8 UNC - STOVER - PL
17	3	250048	BOLT, HEX 1/2 X 2 IN GR5 PL
18	2	250013	BOLT, HEX 1/2 X 1 1/4 IN GR5 PL
19	2	250019	BOLT, HEX 3/8 X 1 1/4 IN GR5 PL
20	2	250453	NUT, HEX - 3/8 UNC PL
21	6	250122	BOLT, HEX 1/4 X 3/4 IN GR5 PL
22	8	250559	WASHER, FLAT - 1/4 IN PL
23	6	250507	NUT, LOCK - 1/4 UNC - STOVER - PL
24	2	503888	SPROCKET, IDLER - 40T18 - 5/8 ID - NOVA SERIES II
25	2	503865	KEY, 1/4 X 1/4 X 2-1/16 IN
26	1	402948	KEY, 1/4 X 1/4 X 1 1/2 IN
27	1	503866	GEAR, DRIVE SHAFT - 20T - NOVA SERIES II
28	1	503867	GEAR, DRIVE SHAFT - 40T - NOVA SERIES II
29	1	503868	PIPE, IDLER SPACER 3 - NOVA SERIES II
30	1	503871	PLATE, 1/4 IN - MOTOR MOUNT - CHAIN REDUCTION - NOVA SERIES II
31	1	503248	WELD, TBT COMMON DRIVE SUPPORT - CHAIN REDUCTION - NOVA SERIES II
32	1	503959	ADAPTOR, 5/8 IN HEX TO 1 IN BORE - CHAIN REDUCTION
33	1	503869	SPROCKET, DUAL - 15 AND 15 TOOTH - NOVA SERIES II
34	1	503279	WELD, TBT FRONT CHAIN GUARD - NOVA SERIES II
35	1	503947	SHEET, 14 GA - REAR CHAIN GUARD - CHAIN REDUCTION - NOVA SERIES II
36	1	503881	WELD, SPROCKET - 40T15 AND 40T28 - 5/8 IN HEX BORE
37	2	250682	COLLAR, SFT 3/4 IN - SET SCREW - PLATED
38	6	250740	SCREW, SET - 5/16 X 3/8 IN UNC PL
39	1	250630	SCREW, SET - 1/4 X 3/8 UNC
40	1	260874	VALVE, PWM - OMNISEED - C/W MANIFOLD - RAVEN
41	2	250081	BOLT, HEX 1/4 X 1 3/4 IN - GR5 PL
42	2	250458	NUT, HEX - 1/4 UNC PL

UPPER DRIVETRAIN

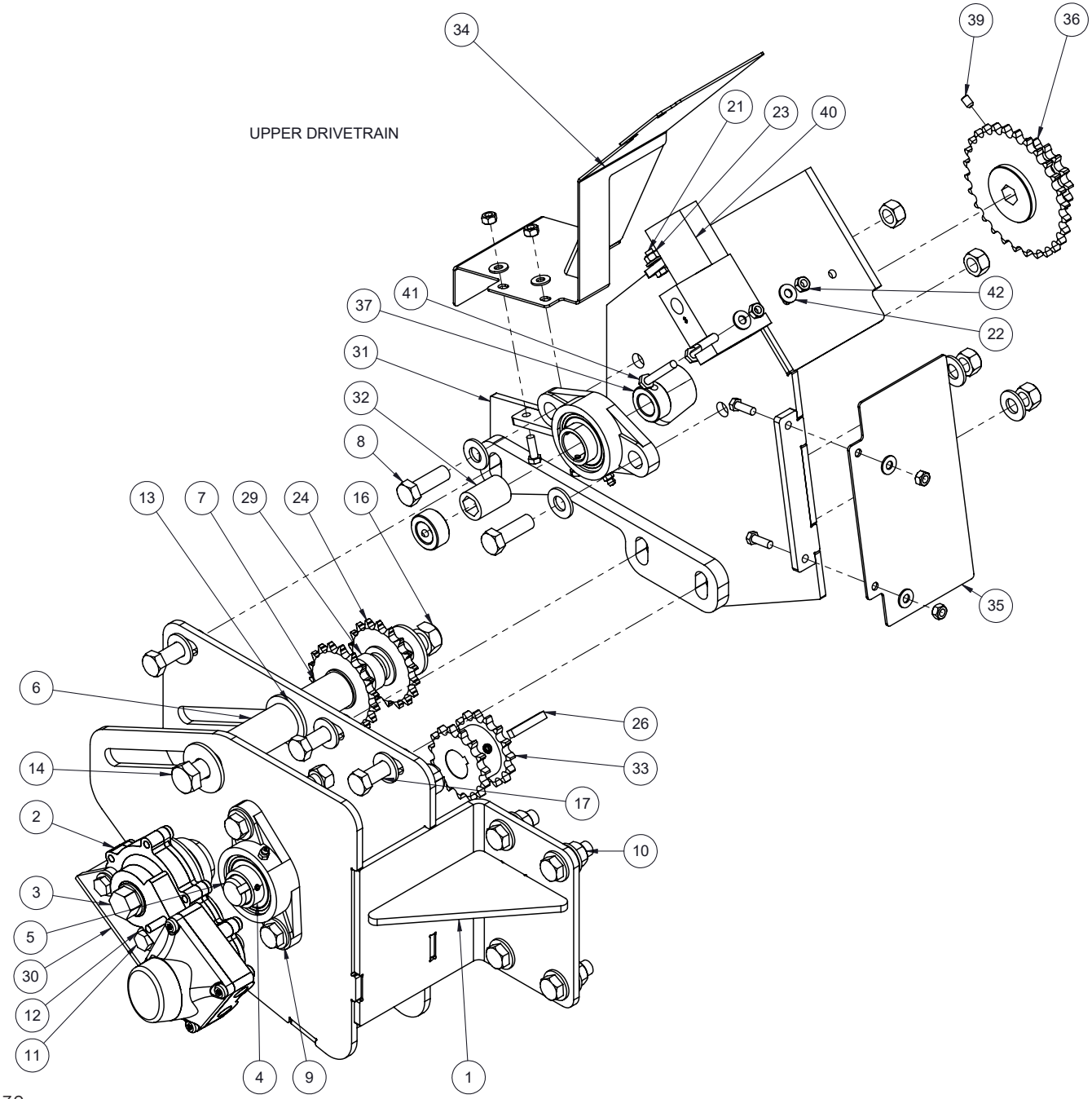

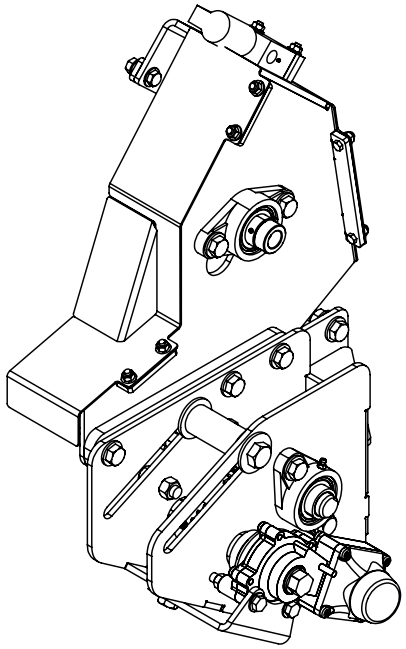

Parts Description:
Canola Gear Reduction Drive
Part Number: 503851

ITEM	QTY.	PART NO.	DESCRIPTION
1	1	503855-1	WELD, STANDARD METER DRIVE - NOVA SERIES II
2	1	260717	MOTOR, HYD - METER DRIVE - RAVEN 3/4 HEX DRIVE
3	1	503861-1	SHAFT, 1IN - PRIMARY - METER DRIVE - NOVA SERIES II
4	4	250872	BEARING, FLANGE - NOVA SERIES II - 1" SFT - UCFL205-100D1
5	1	503862-1	SHAFT, 1IN - SECONDARY - METER DRIVE - NOVA SERIES II
6	1	503863	PIPE, IDLER SPACER 1 - NOVA SERIES II
7	1	503864-1	PIPE, IDLER SPACER 2 - NOVA SERIES II
8	12	250001	BOLT, HEX 1/2 X 1 1/2 IN GR5 PL
9	22	250555	WASHER, FLAT - 1/2 IN - GR8 - PL
10	17	250504	NUT, LOCK - 1/2 UNC - STOVER - PL
11	2	250077	BOLT, HEX 3/8 X 2 1/2 IN GR5 PL
12	6	250557	WASHER, FLAT - 3/8 IN GR8 PL
13	5	250562	WASHER, FLAT 5/8 IN PL
14	1	250150	BOLT, HEX 5/8 X 8 UNC GR5 PL
15	2	250503	NUT, LOCK - 3/8 UNC - STOVER - PL
16	1	250500	NUT, LOCK 5/8 UNC - STOVER - PL
17	2	503888	SPROCKET, IDLER - 40T18 - 5/8 ID - NOVA SERIES II
18	2	503865	KEY, 1/4 X 1/4 X 2-1/16 IN
19	1	402948	KEY, 1/4 X 1/4 X 1 1/2 IN
20	1	503866	GEAR, DRIVE SHAFT - 20T - NOVA SERIES II
21	1	503867	GEAR, DRIVE SHAFT - 40T - NOVA SERIES II
22	1	503868	PIPE, IDLER SPACER 3 - NOVA SERIES II
23	1	503871	PLATE, 1/4 IN - MOTOR MOUNT - CHAIN REDUCTION - NOVA SERIES II
24	1	503893	WELD, COMMON DRIVE SUPPORT - CHAIN REDUCTION - NOVA SERIES II
25	3	250048	BOLT, HEX 1/2 X 2 IN GR5 PL
26	2	250013	BOLT, HEX 1/2 X 1 1/4 IN GR5 PL
27	2	250019	BOLT, HEX 3/8 X 1 1/4 IN GR5 PL
28	2	250453	NUT, HEX - 3/8 UNC PL
29	6	250122	BOLT, HEX 1/4 X 3/4 IN GR5 PL
30	8	250559	WASHER, FLAT - 1/4 IN PL
31	6	250507	NUT, LOCK - 1/4 UNC - STOVER - PL
32	1	503959	ADAPTOR, 5/8 IN HEX TO 1 IN BORE - CHAIN REDUCTION
33	1	503947	SHEET, 14 GA - REAR CHAIN GUARD - CHAIN REDUCTION - NOVA SERIES II
34	1	503954	WELD, CANOLA DRIVE FRONT CHAIN GUARD - NOVA SERIES II
35	1	503886	WELD, 60 TOOTH SPROCKET - 5/8 HEX - NOVA SERIES II
36	1	250643-1	BUSHING, NOVA METER 5/8 HEX - J4
37	1	503879	WELD, 36 TOOTH SPROCKET - 5/8 HEX - NOVA SERIES II
38	1	503884	WELD, SPROCKET - 40T15 AND 40T28 - 1 IN BORE
39	2	250682	COLLAR, SFT 3/4 IN - SET SCREW - PLATED
40	6	250740	SCREW, SET - 5/16 X 3/8 IN UNC PL
41	2	250630	SCREW, SET - 1/4 X 3/8 UNC
42	1	260874	VALVE, PWM - OMNISEED - C/W MANIFOLD - RAVEN
43	2	250081	BOLT, HEX 1/4 X 1 3/4 IN - GR5 PL
44	2	250458	NUT, HEX - 1/4 UNC PL

UPPER DRIVETRAIN

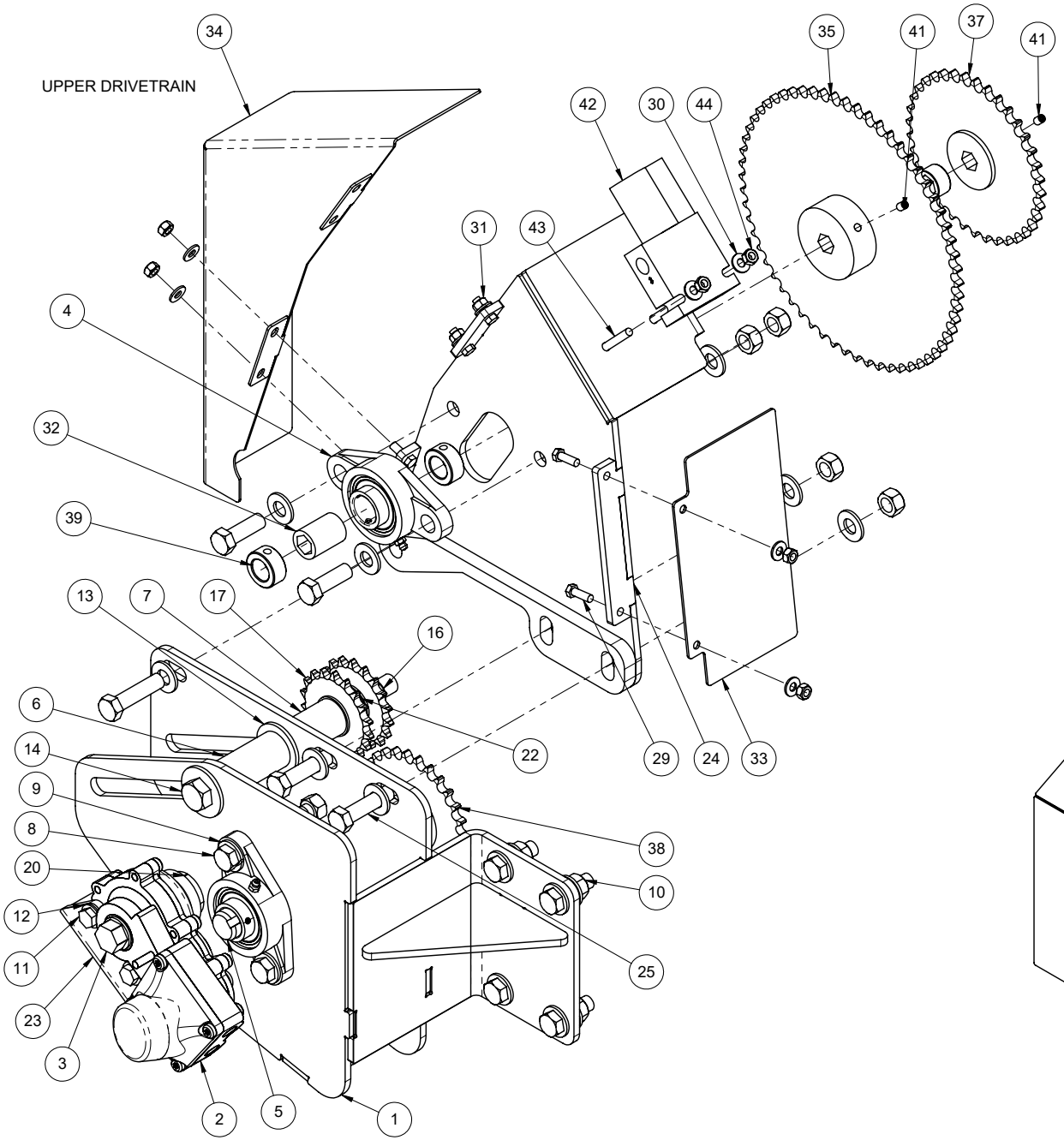

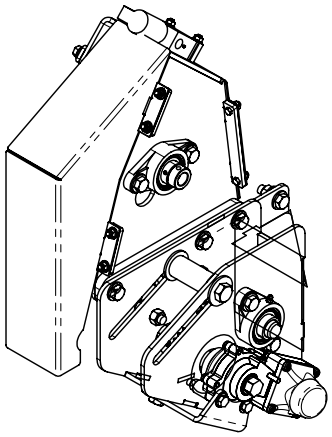

Parts Description:
Tow-Between Canola Gear Reduction Drive
Part Number: 503853

ITEM	QTY.	PART NO.	DESCRIPTION
1	1	503855-1	WELD, STANDARD METER DRIVE - NOVA SERIES II
2	1	260717	MOTOR, HYD - METER DRIVE - RAVEN 3/4 HEX DRIVE
3	1	503861-1	SHAFT, 1IN - PRIMARY - METER DRIVE - NOVA SERIES II
4	4	250872	BEARING, FLANGE - NOVA SERIES II - 1" SFT - UCFL205-100D1
5	1	503862-1	SHAFT, 1IN - SECONDARY - METER DRIVE - NOVA SERIES II
6	1	503863	PIPE, IDLER SPACER 1 - NOVA SERIES II
7	1	503864-1	PIPE, IDLER SPACER 2 - NOVA SERIES II
8	12	250001	BOLT, HEX 1/2 X 1 1/2 IN GR5 PL
9	22	250555	WASHER, FLAT - 1/2 IN - GR8 - PL
10	17	250504	NUT, LOCK - 1/2 UNC - STOVER - PL
11	2	250077	BOLT, HEX 3/8 X 2 1/2 IN GR5 PL
12	6	250557	WASHER, FLAT - 3/8 IN GR8 PL
13	5	250562	WASHER, FLAT 5/8 IN PL
14	1	250150	BOLT, HEX 5/8 X 8 UNC GR5 PL
15	2	250503	NUT, LOCK - 3/8 UNC - STOVER - PL
16	1	250500	NUT, LOCK 5/8 UNC - STOVER - PL
17	2	503888	SPROCKET, IDLER - 40T18 - 5/8 ID - NOVA SERIES II
18	2	503865	KEY, 1/4 X 1/4 X 2-1/16 IN
19	1	402948	KEY, 1/4 X 1/4 X 1 1/2 IN
20	1	503866	GEAR, DRIVE SHAFT - 20T - NOVA SERIES II
21	1	503867	GEAR, DRIVE SHAFT - 40T - NOVA SERIES II
22	1	503868	PIPE, IDLER SPACER 3 - NOVA SERIES II
23	1	503871	PLATE, 1/4 IN - MOTOR MOUNT - CHAIN REDUCTION - NOVA SERIES II
24	1	503248	WELD, TBT COMMON DRIVE SUPPORT - CHAIN REDUCTION - NOVA SERIES II
25	3	250048	BOLT, HEX 1/2 X 2 IN GR5 PL
26	2	250013	BOLT, HEX 1/2 X 1 1/4 IN GR5 PL
27	2	250019	BOLT, HEX 3/8 X 1 1/4 IN GR5 PL
28	2	250453	NUT, HEX - 3/8 UNC PL
29	6	250122	BOLT, HEX 1/4 X 3/4 IN GR5 PL
30	8	250559	WASHER, FLAT - 1/4 IN PL
31	6	250507	NUT, LOCK - 1/4 UNC - STOVER - PL
32	1	503959	ADAPTOR, 5/8 IN HEX TO 1 IN BORE - CHAIN REDUCTION
33	1	503947	SHEET, 14 GA - REAR CHAIN GUARD - CHAIN REDUCTION - NOVA SERIES II
34	2	250682	COLLAR, SFT 3/4 IN - SET SCREW - PLATED
35	1	503276	WELD, TBT CANOLA DRIVE FRONT CHAIN GUARD - NOVA SERIES II
36	1	503886	WELD, 60 TOOTH SPROCKET - 5/8 HEX - NOVA SERIES II
37	1	250643-1	BUSHING, NOVA METER 5/8 HEX - J4
38	1	503879	WELD, 36 TOOTH SPROCKET - 5/8 HEX - NOVA SERIES II
39	1	503884	WELD, SPROCKET - 40T15 AND 40T28 - 1 IN BORE
40	1	260874	VALVE, PWM - OMNISEED - C/W MANIFOLD - RAVEN
41	2	250081	BOLT, HEX 1/4 X 1 3/4 IN - GR5 PL
42	2	250458	NUT, HEX - 1/4 UNC PL

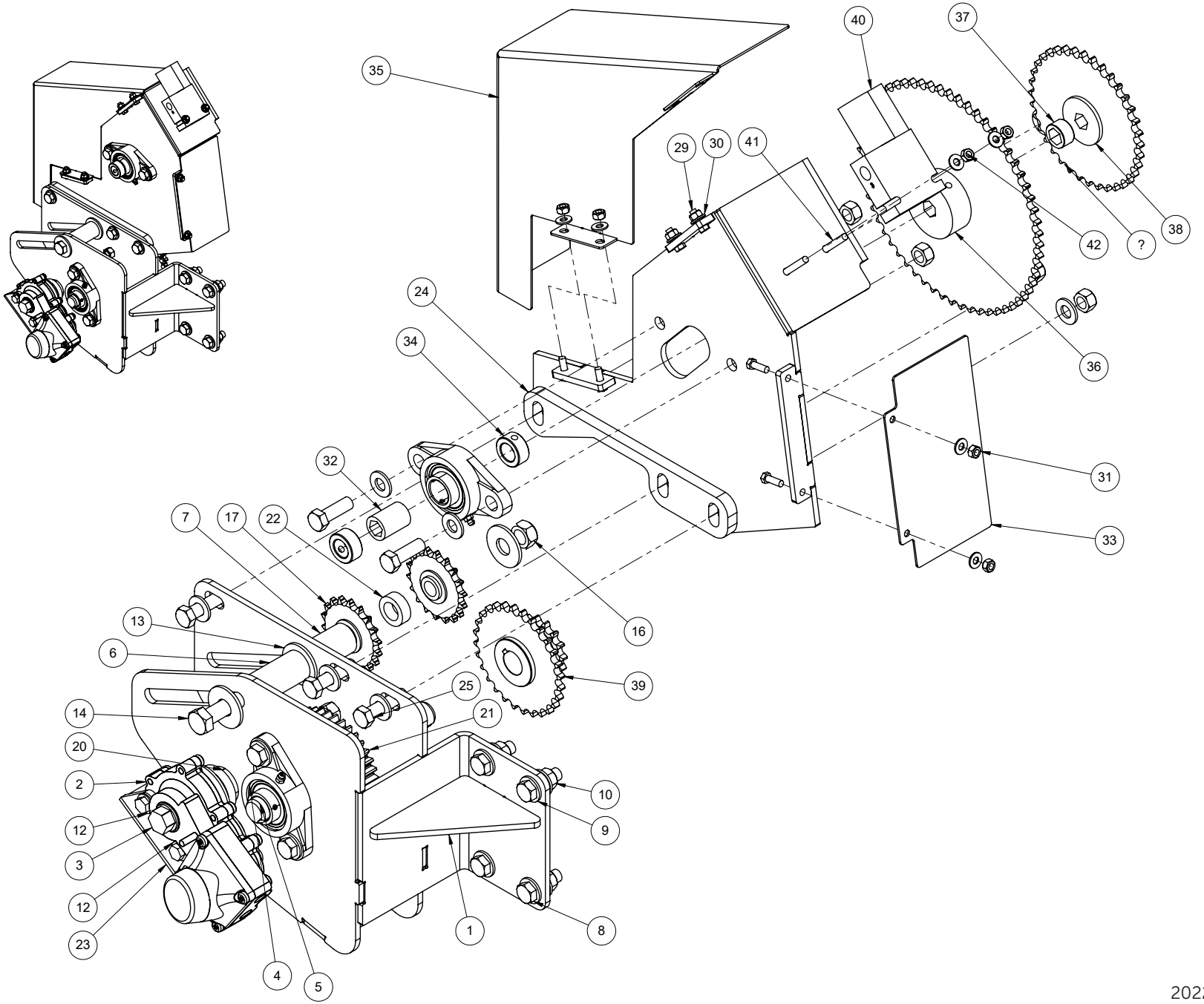
35
40
37
29
30
41
42
?
38
24
34
36
32
31
7
17
22
33
13
16
6
39
25
14
21
20
2
10
12
9
3
12
1
8
23
4
5

Parts Description:
Australian Canola Gear Reduction Drive
Part Number: 503352

ITEM	QTY.	PART NO.	DESCRIPTION
1	1	503246	WELD, STANDARD METER DRIVE - NOVA SERIES II
2	1	260717	MOTOR, HYD - METER DRIVE - RAVEN 3/4 HEX DRIVE
3	1	503861-1	SHAFT, 1IN - PRIMARY - METER DRIVE - NOVA SERIES II
4	4	250872	BEARING, FLANGE - NOVA SERIES II - 1" SFT - UCFL205-100D1
5	1	503862-1	SHAFT, 1IN - SECONDARY - METER DRIVE - NOVA SERIES II
6	1	503863	PIPE, IDLER SPACER 1 - NOVA SERIES II
7	1	503864-1	PIPE, IDLER SPACER 2 - NOVA SERIES II
8	12	250001	BOLT, HEX 1/2 X 1 1/2 IN GR5 PL
9	22	250555	WASHER, FLAT - 1/2 IN - GR8 - PL
10	17	250504	NUT, LOCK - 1/2 UNC - STOVER - PL
11	2	250077	BOLT, HEX 3/8 X 2 1/2 IN GR5 PL
12	6	250557	WASHER, FLAT - 3/8 IN GR8 PL
13	5	250562	WASHER, FLAT 5/8 IN PL
14	1	250150	BOLT, HEX 5/8 X 8 UNC GR5 PL
15	2	250503	NUT, LOCK - 3/8 UNC - STOVER - PL
16	1	250500	NUT, LOCK 5/8 UNC - STOVER - PL
17	2	503888	SPROCKET, IDLER - 40T18 - 5/8 ID - NOVA SERIES II
18	2	503865	KEY, 1/4 X 1/4 X 2-1/16 IN
19	1	402948	KEY, 1/4 X 1/4 X 1 1/2 IN
20	1	503866	GEAR, DRIVE SHAFT - 20T - NOVA SERIES II
21	1	503875	GEAR, METER DRIVE - 60T
22	1	503868	PIPE, IDLER SPACER 3 - NOVA SERIES II
23	1	503871	PLATE, 1/4 IN - MOTOR MOUNT - CHAIN REDUCTION - NOVA SERIES II
24	1	503893	WELD, COMMON DRIVE SUPPORT - CHAIN REDUCTION - NOVA SERIES II
25	3	250048	BOLT, HEX 1/2 X 2 IN GR5 PL
26	2	250013	BOLT, HEX 1/2 X 1 1/4 IN GR5 PL
27	2	250019	BOLT, HEX 3/8 X 1 1/4 IN GR5 PL
28	2	250453	NUT, HEX - 3/8 UNC PL
29	6	250122	BOLT, HEX 1/4 X 3/4 IN GR5 PL
30	8	250559	WASHER, FLAT - 1/4 IN PL
31	6	250507	NUT, LOCK - 1/4 UNC - STOVER - PL
32	1	503959	ADAPTOR, 5/8 IN HEX TO 1 IN BORE - CHAIN REDUCTION
33	1	503954	WELD, CANOLA DRIVE FRONT CHAIN GUARD - NOVA SERIES II
34	1	503947	SHEET, 14 GA - REAR CHAIN GUARD - CHAIN REDUCTION - NOVA SERIES II
35	1	503884	WELD, SPROCKET - 40T15 AND 40T28 - 1 IN BORE
36	1	503879	WELD, 36 TOOTH SPROCKET - 5/8 HEX - NOVA SERIES II
37	1	250643-1	BUSHING, NOVA METER 5/8 HEX - J4
38	1	503886	WELD, 60 TOOTH SPROCKET - 5/8 HEX - NOVA SERIES II
39	2	250682	COLLAR, SFT 3/4 IN - SET SCREW - PLATED
40	1	260874	VALVE, PWM - OMNISEED - C/W MANIFOLD - RAVEN
41	2	250081	BOLT, HEX 1/4 X 1 3/4 IN - GR5 PL
42	2	250458	NUT, HEX - 1/4 UNC PL
43	2	250630	SCREW, SET - 1/4 X 3/8 UNC

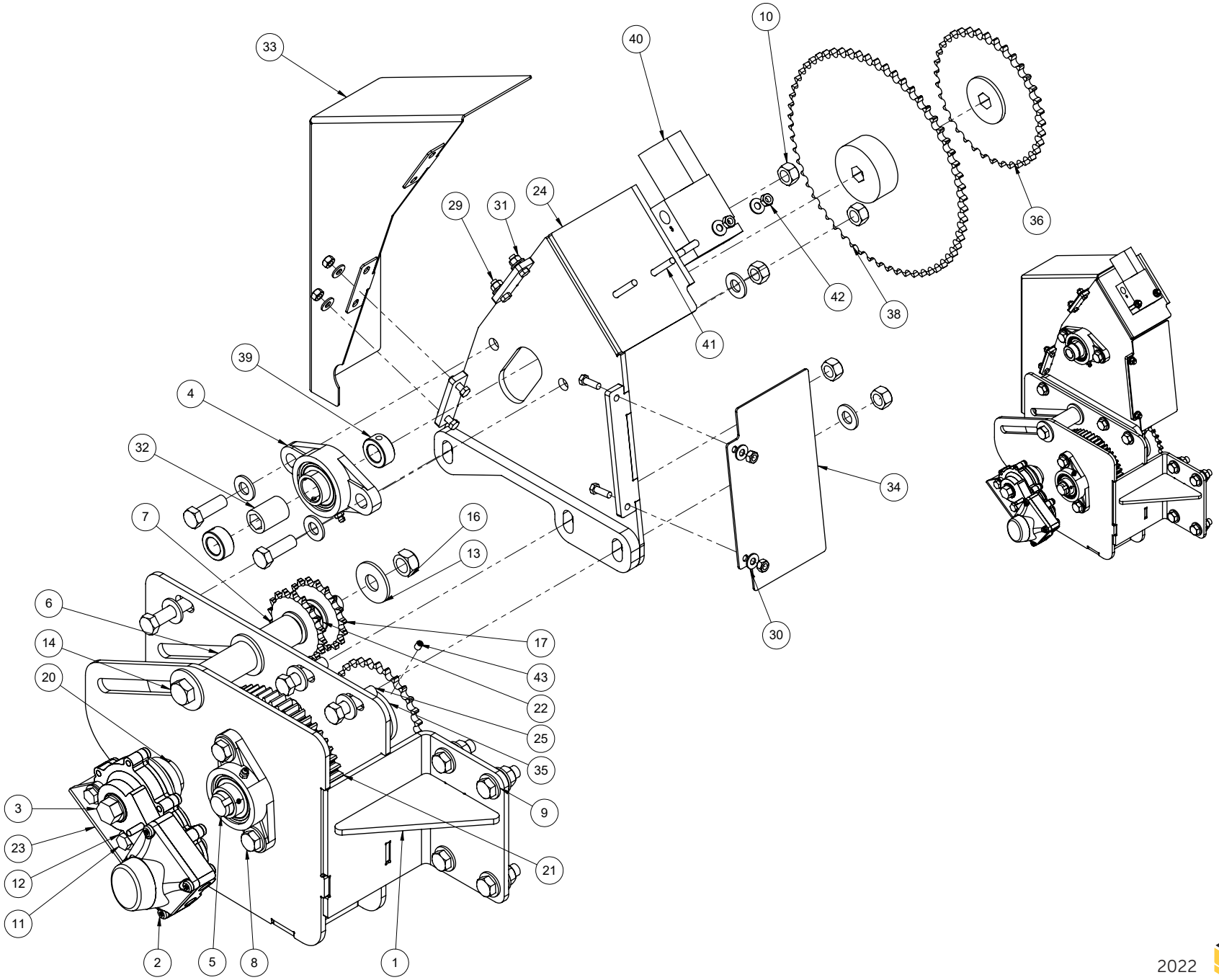
33
40
10
36
29
31
24
42
38
41
39
4
32
34
7
16
13
6
17
14
43
20
22
25
35
9
3
23
12
11
21
2
5
8
1

Parts Description:
Australian Tow-Between Canola Gear Reduction Drive
Part Number: 503897

ITEM	QTY.	PART NO.	DESCRIPTION
1	1	503246	WELD, STANDARD METER DRIVE - NOVA SERIES II
2	1	260717	MOTOR, HYD - METER DRIVE - RAVEN 3/4 HEX DRIVE
3	1	503861-1	SHAFT, 1IN - PRIMARY - METER DRIVE - NOVA SERIES II
4	4	250872	BEARING, FLANGE - NOVA SERIES II - 1" SFT - UCFL205-100D1
5	1	503862-1	SHAFT, 1IN - SECONDARY - METER DRIVE - NOVA SERIES II
6	1	503863	PIPE, IDLER SPACER 1 - NOVA SERIES II
7	1	503864-1	PIPE, IDLER SPACER 2 - NOVA SERIES II
8	12	250001	BOLT, HEX 1/2 X 1 1/2 IN GR5 PL
9	22	250555	WASHER, FLAT - 1/2 IN - GR8 - PL
10	17	250504	NUT, LOCK - 1/2 UNC - STOVER - PL
11	2	250077	BOLT, HEX 3/8 X 2 1/2 IN GR5 PL
12	6	250557	WASHER, FLAT - 3/8 IN GR8 PL
13	5	250562	WASHER, FLAT 5/8 IN PL
14	1	250150	BOLT, HEX 5/8 X 8 UNC GR5 PL
15	2	250503	NUT, LOCK - 3/8 UNC - STOVER - PL
16	1	250500	NUT, LOCK 5/8 UNC - STOVER - PL
17	2	503888	SPROCKET, IDLER - 40T18 - 5/8 ID - NOVA SERIES II
18	2	503865	KEY, 1/4 X 1/4 X 2-1/16 IN
19	1	402948	KEY, 1/4 X 1/4 X 1 1/2 IN
20	1	503866	GEAR, DRIVE SHAFT - 20T - NOVA SERIES II
21	1	503875	GEAR, METER DRIVE - 60T
22	1	503868	PIPE, IDLER SPACER 3 - NOVA SERIES II
23	1	503871	PLATE, 1/4 IN - MOTOR MOUNT - CHAIN REDUCTION - NOVA SERIES II
24	1	503248	WELD, TBT COMMON DRIVE SUPPORT - CHAIN REDUCTION - NOVA SERIES II
25	3	250048	BOLT, HEX 1/2 X 2 IN GR5 PL
26	2	250013	BOLT, HEX 1/2 X 1 1/4 IN GR5 PL
27	2	250019	BOLT, HEX 3/8 X 1 1/4 IN GR5 PL
28	2	250453	NUT, HEX - 3/8 UNC PL
29	6	250122	BOLT, HEX 1/4 X 3/4 IN GR5 PL
30	8	250559	WASHER, FLAT - 1/4 IN PL
31	6	250507	NUT, LOCK - 1/4 UNC - STOVER - PL
32	1	503959	ADAPTOR, 5/8 IN HEX TO 1 IN BORE - CHAIN REDUCTION
33	1	503276	WELD, TBT CANOLA DRIVE FRONT CHAIN GUARD - NOVA SERIES II
34	1	503947	SHEET, 14 GA - REAR CHAIN GUARD - CHAIN REDUCTION - NOVA SERIES II
35	1	503884	WELD, SPROCKET - 40T15 AND 40T28 - 1 IN BORE
36	1	503879	WELD, 36 TOOTH SPROCKET - 5/8 HEX - NOVA SERIES II
37	1	250643-1	BUSHING, NOVA METER 5/8 HEX - J4
38	1	503886	WELD, 60 TOOTH SPROCKET - 5/8 HEX - NOVA SERIES II
39	2	250682	COLLAR, SFT 3/4 IN - SET SCREW - PLATED
40	1	260874	VALVE, PWM - OMNISEED - C/W MANIFOLD - RAVEN
41	2	250081	BOLT, HEX 1/4 X 1 3/4 IN - GR5 PL
42	2	250458	NUT, HEX - 1/4 UNC PL
43	2	250630	SCREW, SET - 1/4 X 3/8 UNC

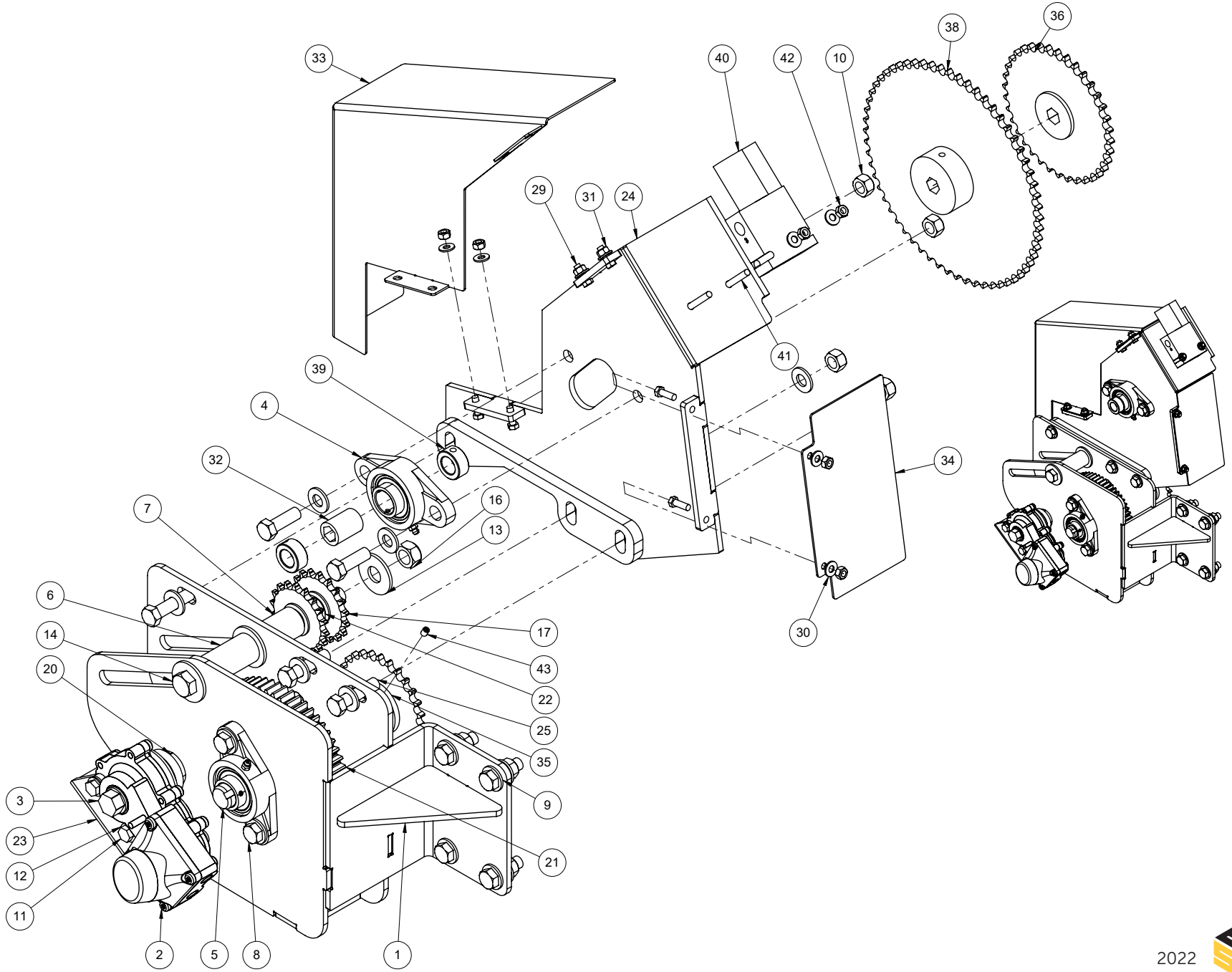
33
40
42
10
38
36
29
31
24
41
39
4
32
7
16
13
6
14
20
17
43
22
25
35
9
21
3
23
12
11
2
5
8
1
34
30

Parts Description:
Raven Hydraulic Meter Motor
Part Number: 260717

ITEM	QTY.	PART NO.	DESCRIPTION
1	1	260824	SPEED SENSOR, HYD MOTOR - OMNISEED
2	1	260805	KIT, SEAL

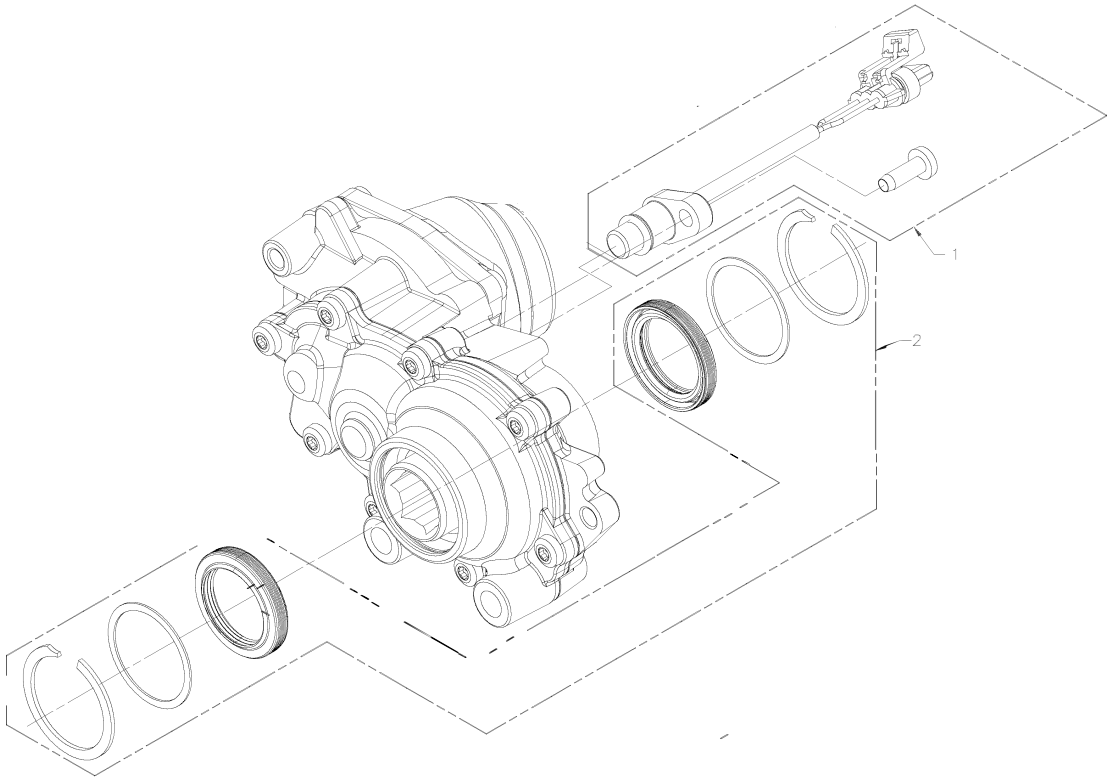

THIS PAGE LEFT INTENTIONALLY BLANK

Parts Description:

Tank to Meter Transition

Part Number: 500400-2 – 10 Zone
501249-2 – 08 Zone

500400-1 - BDL, TRANSITION - TANK TO METER - NOVA			
ITEM	QTY.	PART NO.	DESCRIPTION
1	1	500401-5	ASSY, TRANSITION - TANK TO METER - NOVA - BLK
2	10	500416-2	ASSY, SERVICE SLOT RETAINING BOLT - STAINLESS - NOVA
3	2	500425-1	PLATE, CENTERING GUIDE 3/8 IN - NOVA - BLK
4	40	250140	BOLT, CARRIAGE - 3/8 X 1 3/4IN UND GR5 PL
5	4	250108	BOLT, CARRIAGE - 3/8 X 1 1/2IN UND GR5 PL
6	44	250566	WASHER, FLAT - 1/2 IN PL
7	44	250453	NUT, HEX - 3/8 UNC PL

501249-1 (Items 8-13 Used to Block Zones) - BDL, TRANSITION - TANK TO METER - 8 SECTION			
ITEM	QTY.	PART NO.	DESCRIPTION
8	4	250658	SCREW, SELF THREAD - 1/4 X 1 IN
9	8	250109	BOLT, CARRIAGE - 3/8 X 1 1/4 IN UNC - STAINLESS
10	8	250569	WASHER, FLAT - 3/8 IN SS
11	8	250464	NUT, HEX - 3/8 UNC GR5 JS500
12	2	501250-2	SHEET, FRMD 10 GA - DIVIDER - 8 OUTLET - BLK
13	2	501253	PLATE, METER BLOCKER - BOTTOM - NOVA

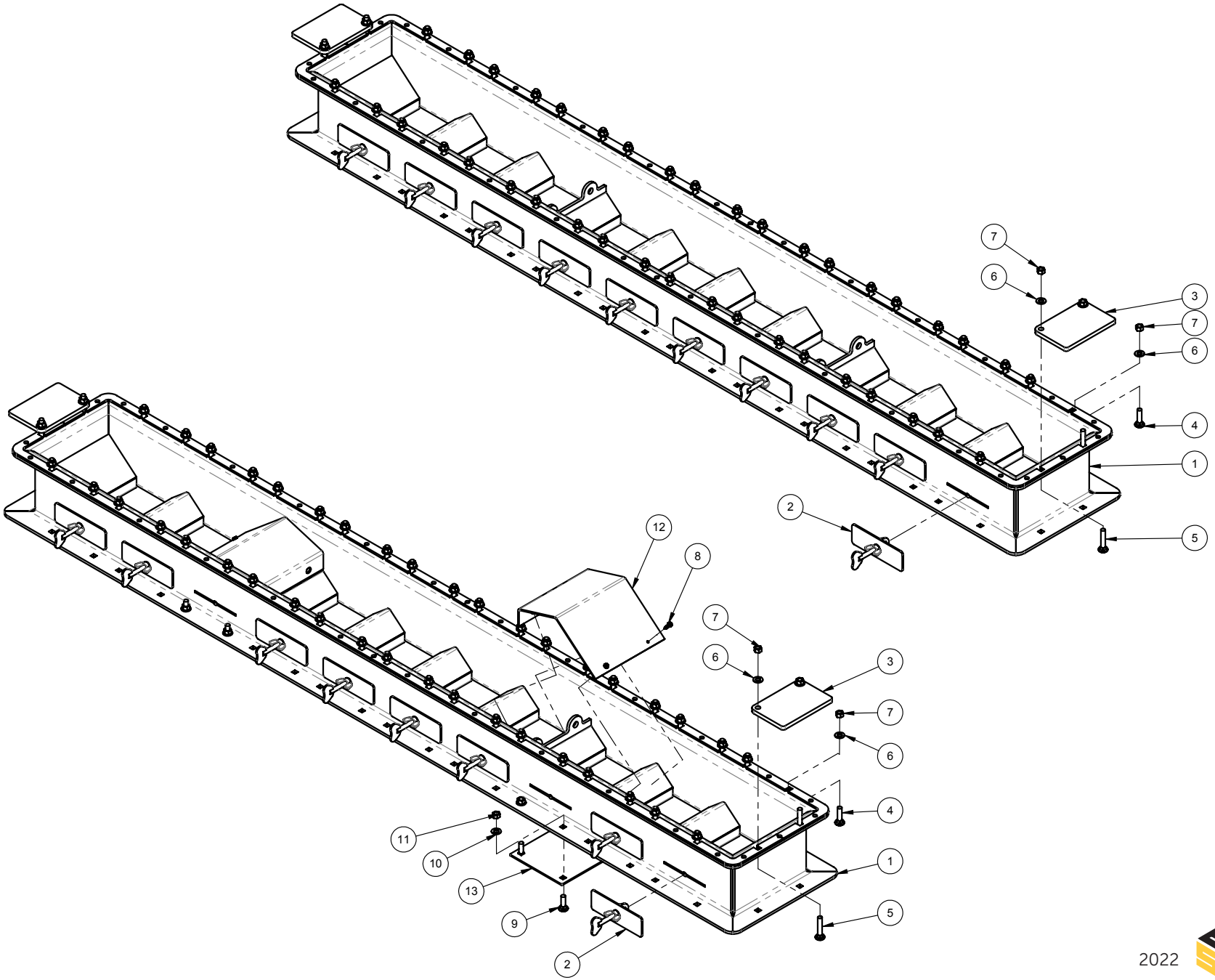
7
6
3
7
6
4
1
2
5
12
8
7
6
3
7
6
4
11
10
1
13
9
5
2

Parts Description:

40 BU Canola Tank

Part Number: 500660 – 10 Zone
500655 – 08 Zone

500655

ITEM	QTY.	PART NO.	DESCRIPTION
1	1	500661-9	ASSY, CANOLA TANK - 40BU - NOVA - YEL
2	1	500685-2	ASSY, CANOLA TANK LID ARM - NOVA - BLK
3	1	500695-2	ASSY, CANOLA TANK LID - NOVA - BLK
4	2	500690-2	ASSY, HINGE PIN-3/4 X 23 3/8 IN - CANOLA TANK LID-BLK
5	1	258551	CYL, HYD 2 X 4 IN - FILL AUGER
6	8	500416-2	ASSY, SERVICE SLOT RETAINING BOLT - STAINLESS - NOVA
7	1	500835-1	ASSY, CANOLA TANK SCREEN - NOVA - YEL
8	2	501252-1	SHEET, FRMD 10 GA - DIVIDER - 8 OUTLET CANOLA TANK
9	2	501253	PLATE, METER BLOCKER - BOTTOM - NOVA
10	8	250109	BOLT, CARRIAGE - 3/8 X 1 1/4 IN UNC - STAINLESS
11	8	250569	WASHER, FLAT - 3/8 IN SS
12	2	250552	WASHER, FLAT 3/4IN GR8 PL
13	2	250599	PIN, SPRING - 3/16 X 1 IN
14	8	250658	SCREW, SELF THREAD - 1/4 X 1 IN
15	8	250464	NUT, HEX - 3/8 UNC GR5 JS500
16	6	250034	BOLT, HEX 5/8 X 2 1/2 UNC GR8 PL
17	12	250459	NUT, JAM - 5/8 UNC - PL

ITEMS 7, 9, 10, 11, 14, AND 15 NOT USED IN 500660

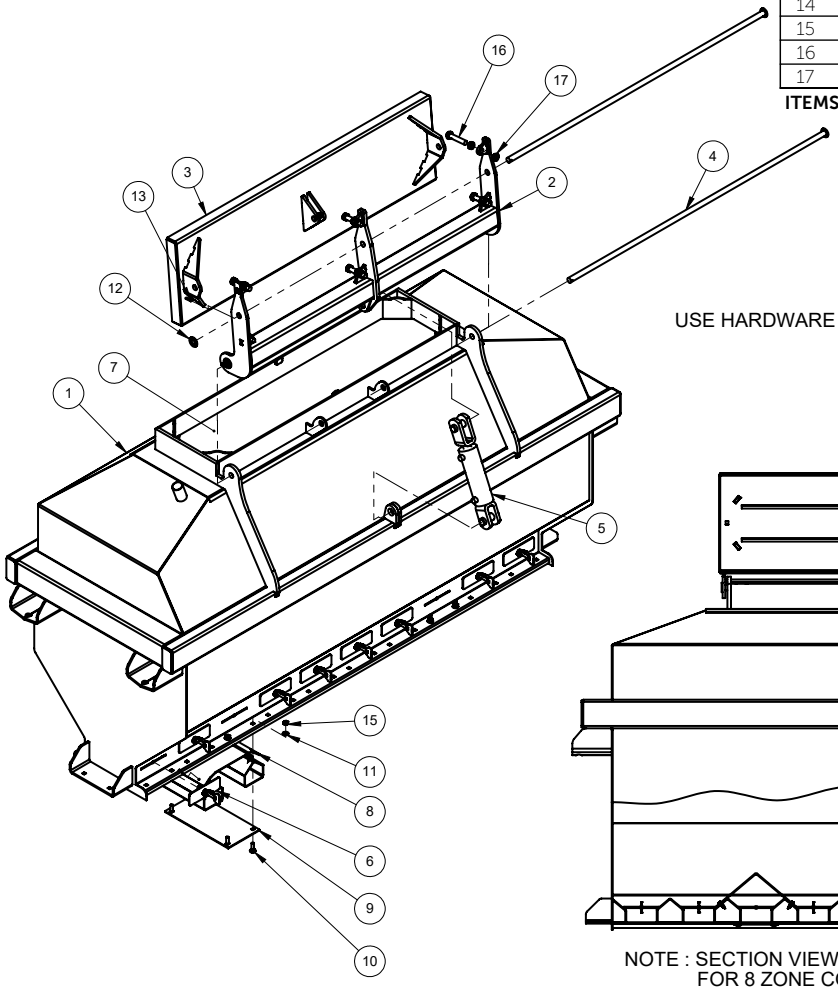

USE HARDWARE BAG 500714-1

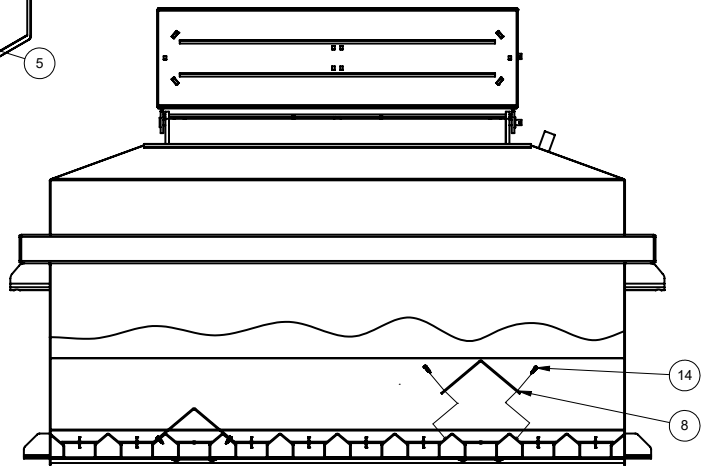

NOTE : SECTION VIEW SHOWING DIVIDER PLATE ASSEMBLY
FOR 8 ZONE CONFIGURATION

Parts Description:

110 BU T/B Nova Tank

Part Number: 503100-1 – 10 Zone
503099-1 – 08 Zone

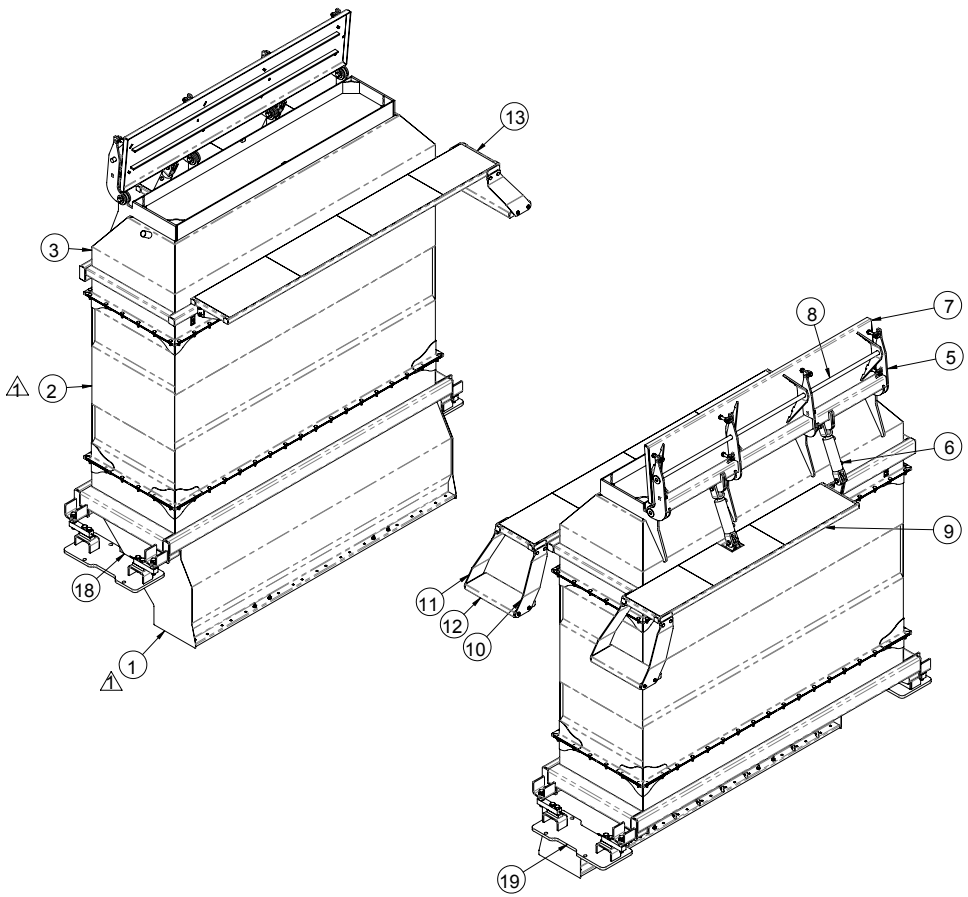

ITEM	QTY.	PART NO.	DESCRIPTION	
1	1	503130-3	ASSY, BTM SECTION - 110BU TANK - T/B NOVA - YEL	
2	1	503125-1	ASSY, MID SECTION - 110BU TANK - T/B NOVA - YEL	
3	1	503110-4	ASSY, TOP SECTION - 110BU TANK - T/B NOVA - YEL	
4	4	503198	ASSY, HINGE PIN - 110BU TANK - T/B NOVA - BLK	
5	1	503150-4	ASSY, LID ARM - 110BU TANK - T/B NOVA - BLK	
6	2	258551	CYL, HYD 2 X 4 IN - FILL AUGER	
7	1	503145-2	ASSY, LID - 110BU TANK - T/B NOVA - BLK	
8	1	503155	ASSY, HINGE PIN - 110BU TANK - T/B NOVA - BLK	
9	1	503180	ASSY, REAR WALKWAY - 110BU TANK - T/B NOVA - BLK	
10	2	503184	PLATE, FRMD - 1/4 IN - R.H. STEP - 110BU TANK - T/B NOVA - BLK	
11	2	503183	PLATE, FRMD - 1/4 IN - L.H. STEP - 110BU TANK - T/B NOVA - BLK	
12	2	501640	ASSY, STEP - BETWEEN TANK STEP - NOVA - BLK	
13	1	503170	ASSY, FRONT WALKWAY - 110BU TANK - T/B NOVA - BLK	
14	1	503160-1	ASSY - SCREEN - 110BU TANK - T/B NOVA - YEL	
15	40	403849	BUSH, 1.500 OD X .75 ID X 3/4 IN	
16	4	250094	BOLT, HEX 3/4 X 4 UNF GR5 PL	
17	36	403848	PLATE, SPACER 3/4 IN - AIR CART CRADLE MOUNT	
18	1	503190-2	ASSY, RIGHT LOAD CELL MOUNT - 110BU TANK - T/B NOVA - BLK	
19	1	503185-2	ASSY, LEFT LOAD CELL MOUNT - 110BU TANK - T/B NOVA - BLK	
20	4	270173	LOAD CELL - SCALE TEC - 1.5 SB SS 3MV/V DT-06	
21	118	250101	BOLT, CARRIAGE - 3/8 X 1 1/4 IN UNC GR5 PL	
22	104	250400	NUT, FLANGE - 3/8 UNC PL	
23	20	250552	WASHER, FLAT 3/4IN GR8 PL	
24	8	250082	BOLT, HEX 3/4 X 3 3/4 UNC GR5 PL	
25	8	250451	NUT, HEX 3/4 UNC GR5 PL	
26	22	250453	NUT, HEX - 3/8 UNC PL	
27	30	250557	WASHER, FLAT - 3/8 IN GR8 PL	
28	8	250036	BOLT, HEX 3/8 X 1 IN GR5 PL	
29	8	250109	BOLT, CARRIAGE - 3/8 X 1 1/4 IN UNC - STAINLESS	NOT USED IN 503100-1
30	8	250464	NUT, HEX - 3/8 UNC GR5 JS500	NOT USED IN 503100-1
31	8	250569	WASHER, FLAT - 3/8 IN SS	NOT USED IN 503100-1
32	8	250658	SCREW, SELF THREAD - 1/4 X 1 IN	NOT USED IN 503100-1
33	4	250554	WASHER, FLAT - 1 IN GR8 PL	
34	4	250681	PIN, SPRING - 3/16 X 1 IN	
35	8	250034	BOLT, HEX 5/8 X 2 1/2 UNC GR8 PL	
36	16	250459	NUT, JAM - 5/8 UNC - PL	
37	2	503141	SHEET, FRMD 10 GA - 8 ZONE DIVIDER - 110BU TANK - YEL	NOT USED IN 503100-1
38	2	501253	PLATE, METER BLOCKER - BOTTOM - NOVA	NOT USED IN 503100-1
39	8	500416-2	ASSY, SERVICE SLOT RETAINING BOLT - STAINLESS - NOVA	

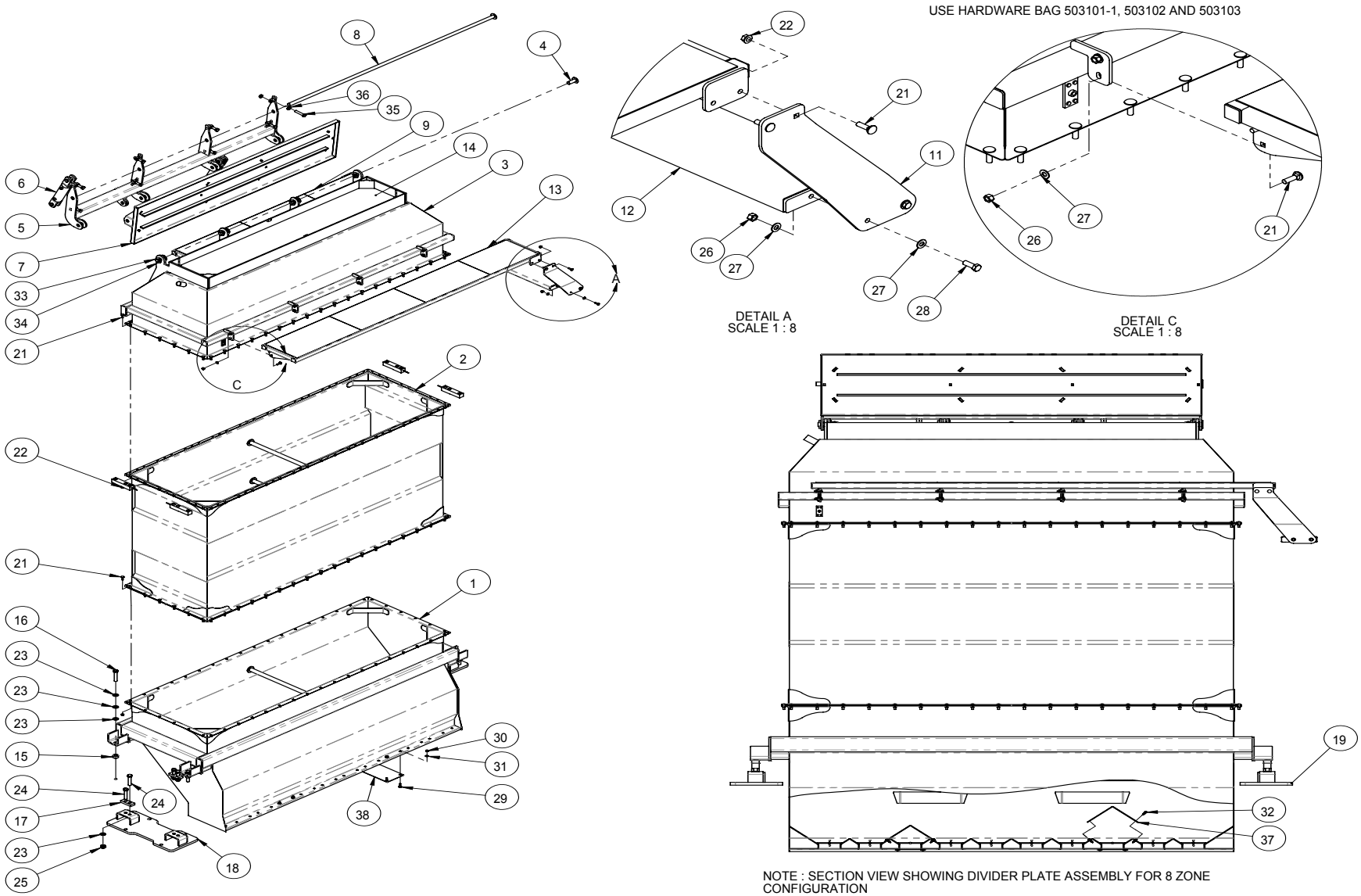
USE HARDWARE BAG 503101-1, 503102 AND 503103
DETAIL A
SCALE 1 : 8
DETAIL C
SCALE 1 : 8
NOTE : SECTION VIEW SHOWING DIVIDER PLATE ASSEMBLY FOR 8 ZONE CONFIGURATION

Parts Description:

Tank Cradle/Load Cells

Part Number: 500350-1

ITEM	QTY.	PART NO.	DESCRIPTION
1	4	500370-3	ASSY, LOAD CELL MOUNT - TANK CRADLE - NOVA - BLK
2	4	270173	LOAD CELL - SCALE TEC - 1.5 SB SS 3MV/V DT-06
3	2	500355-3	ASSY, CRADLE SLOPE - NOVA - BLK
4	2	500365	ASSY, BEAM - SIDE - TANK CRADLE - NOVA - BLK
5	2	500368	PLATE, BOLT 1/2 IN - CONNECTING PLATE - NOVA - BLK
6	4	403848	PLATE, SPACER 3/4 IN - AIR CART CRADLE MOUNT
7	4	403849	BUSH, 1.500 OD X .75 ID X 3/4 IN
8	8	250231	BOLT, U-SQ - 3/4 UNC X 8 ID X 14 IN - 2 IN THD - GR8 PL
9	32	250047	BOLT, HEX 5/8 X 2 UNC GR5 PL
10	32	250455	NUT, HEX 5/8 UNC GR5 PL
11	32	250550	WASHER, FLAT 5/8 IN GR8 PL
12	36	250552	WASHER, FLAT 3/4IN GR8 PL
13	24	250451	NUT, HEX 3/4 UNC GR5 PL
14	8	250082	BOLT, HEX 3/4 X 3 3/4 UNC GR5 PL
15	4	250094	BOLT, HEX 3/4 X 4 UNF GR5 PL
16	2	250468	NUT, JAM -3/46 UNF - PL
17	1	250690	COLLAR, SPLIT 3/4 IN - LOAD CELL SPACER

USE HARDWARE BAG 403980, 500385 AND 500386-1

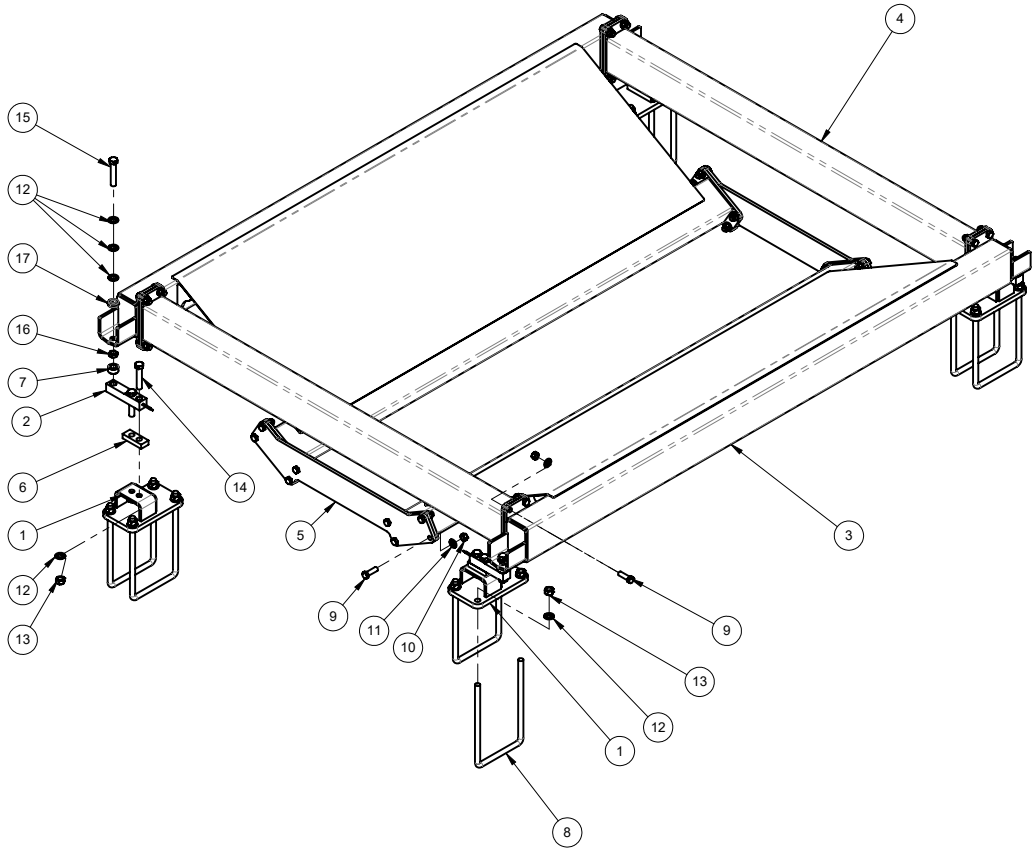

Parts Description:

Tank Lid

Part Number: 500500-4

ITEM	QTY.	PART NO.	DESCRIPTION
1	1	500520-4	ASSY, AIR CART LID BASE ASSEMBLY - BLK
2	1	500530-2	ASSY, AIR CART LID
3	1	500545-2	ASSY, AIR CART LID ARM
4	2	500550-1	ASSY, PIN - 3/4 IN LID
5	2	250552	WASHER, FLAT 3/4IN GR8 PL
6	2	250607	PIN, SPRING - 3/16 X 1 1/4 IN
7	22	250566	WASHER, FLAT - 3/8 IN PL
8	22	250453	NUT, HEX - 3/8 UNC PL
9	1	LID SEAL	CELLTITE SPONGE - 1/2 X 2 IN
10	1	SEAL INNER	CELLTITE SPONGE - 1/2 X 2 IN
11	1	SEAL OUTER	CELLTITE SPONGE - 1/2 X 2 IN
12	1	258552	CYL, HYD 2 X 8 IN - FILL AUGER

USE HARDWARE BAG 500540-1

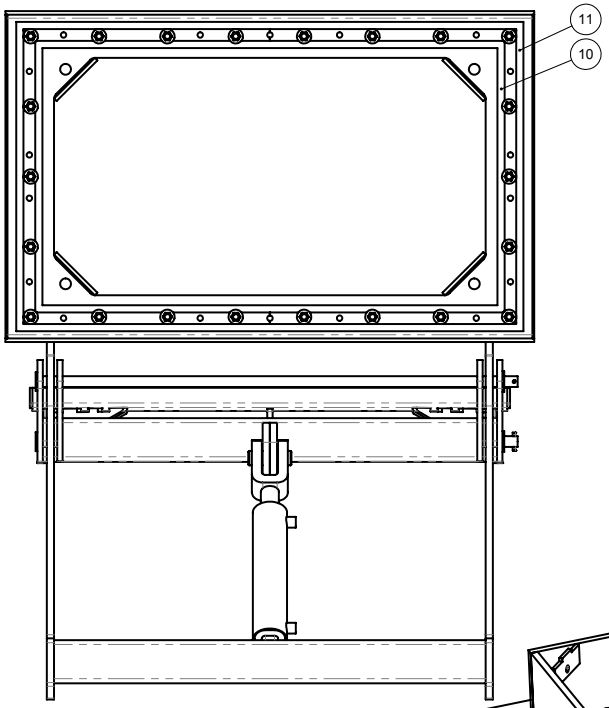

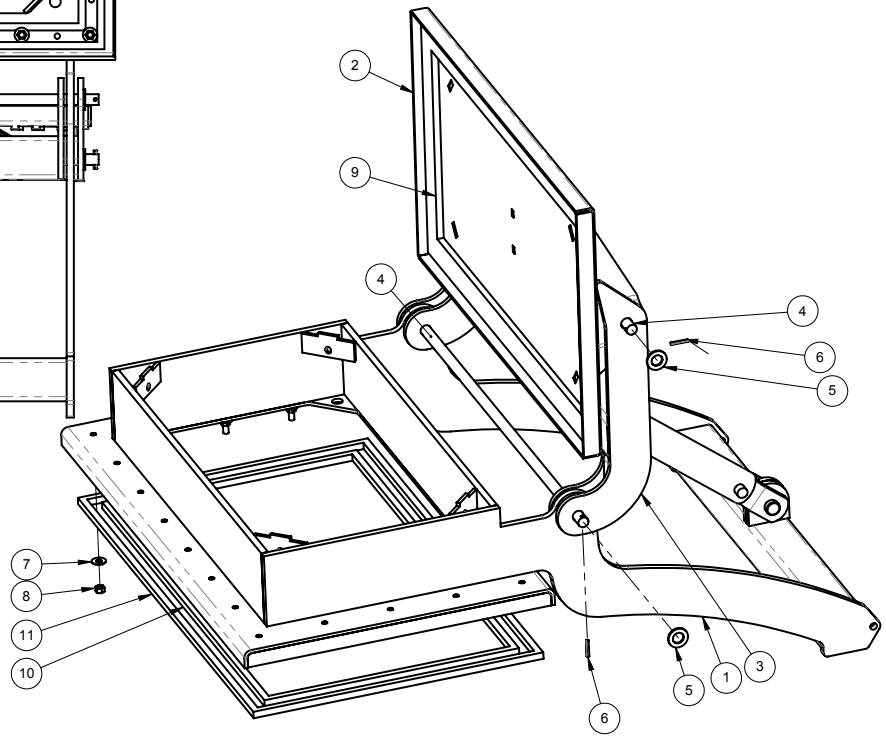

THIS PAGE LEFT INTENTIONALLY BLANK

Parts Description:

Nova Y-Section Bundles

Part Number: 500900-1 – Dual Shoot 10 Zone
500901-1 – Single Shoot 10 Zone
500870-1 – Dual Shoot 8 Zone
500871-1 – Single Shoot 8 Zone

110 BU Tow Behind Tank

Part Number: 503560-1 – Dual Shoot 10 Zone
503561-1 – Single Shoot 10 Zone
503567-1 – Dual Shoot 8 Zone
503568-1 – Single Shoot 8 Zone

DETAIL A - 500120 - ASSY, PLUG - Y SECTION - NOVA

ITEM	QTY.	PART NO.	DESCRIPTION
1	1	500122	PLUG, AIR - 2IN PIPE - GRIPPER - DURO - 55A
2	1	250110	BOLT, ELEVATOR - 3/8 X 2 IN UNC GR5 PL
3	1	250531	NUT, WING - 3/8 UNC - STAINLESS
4	1	500121	SHEET, 14 GA - WASHER - PLUG - Y SECTION

500900-1 - BDL, Y-SECTION - DUAL SHOOT - NOVA

ITEM	QTY.	PART NO.	DESCRIPTION
1	1	500910-3	ASSY, Y-SECTION - DUAL SHOOT - NOVA - BLK
2	1	503878	PLATE, FRMD 1/4 IN - Y SECTION HANGER - DRIVE MNT - LH - BLK
3	1	500928-2	PLATE, FRMD 1/4 IN - Y SECTION HANGER - RH - BLK
4	4	250001	BOLT, HEX 1/2 X 1 1/2 IN GR5 PL
5	4	250555	WASHER, FLAT - 1/2 IN - GR8 - PL
6	4	250450	NUT, HEX 1/2 UNC GR5 PL
7	4	250100	BOLT, CARRIAGE - 3/8 X 1 1/2IN UND GR5 PL
8	4	250557	WASHER, FLAT - 3/8 IN GR8 PL
9	4	250453	NUT, HEX - 3/8 UNC PL
10	10	500120	ASSY, PLUG - Y SECTION - NOVA

500901-1 (Substitute Items Below) - BDL, Y-SECTION - SINGLE SHOOT - NOVA

ITEM	QTY.	PART NO.	DESCRIPTION
1	1	500915-2	ASSY, Y-SECTION - SINGLE SHOOT - NOVA - BLK

500870-1 (Substitute Items Below) - BDL, Y-SECTION - DUAL SHOOT - 8 ZONE - NOVA

ITEM	QTY.	PART NO.	DESCRIPTION
1	1	500882-2	ASSY, Y-SECTION - DUAL SHOOT - 8 ZONE - NOVA - BLK

500871-1 (Substitute Items Below) - BDL, Y-SECTION - SINGLE SHOOT - 8 ZONE - NOVA

ITEM	QTY.	PART NO.	DESCRIPTION
1	1	500880-1	ASSY, Y-SECTION - SINGLE SHOOT - 8 ZONE - NOVA - BLK

503560-1 - BDL, Y-SECTION - 110BU TANK - DUAL SHOOT - 10 ZONE - 630 TOW BEHIND

ITEM	QTY.	PART NO.	DESCRIPTION
1	1	500910-3	ASSY, Y-SECTION - DUAL SHOOT - NOVA - BLK
2	4	250001	BOLT, HEX 1/2 X 1 1/2 IN GR5 PL
3	4	250450	NUT, HEX 1/2 UNC GR5 PL
4	4	250555	WASHER, FLAT - 1/2 IN - GR8 - PL
5	4	250100	BOLT, CARRIAGE - 3/8 X 1 1/2IN UND GR5 PL
6	4	250557	WASHER, FLAT - 3/8 IN GR8 PL
7	4	250453	NUT, HEX - 3/8 UNC PL
8	10	500120	ASSY, PLUG - Y SECTION - NOVA
9	1	503401	PLATE, FRMD 1/4 IN - Y SEC HANGER - LH - 630 TOW BEHIND BLK
10	1	503563-1	PLATE, FRMD 1/4 IN - Y SEC HANGER - RH - 630 TOW BEHIND

503561-1 (Substitute Items Below) - BDL, Y-SECTION - 110BU TANK - SINGLE SHOOT - 10 ZONE - 630

ITEM	QTY.	PART NO.	DESCRIPTION
1	1	500915-2	ASSY, Y-SECTION - SINGLE SHOOT - NOVA - BLK

503567-1 (Substitute Items Below) - BDL, Y-SECTION - 110BU TANK - DUAL SHOOT - 8 ZONE - 630

ITEM	QTY.	PART NO.	DESCRIPTION
1	1	500882-2	ASSY, Y-SECTION - DUAL SHOOT - 8 ZONE - NOVA - BLK

503568-1 (Substitute Items Below) - BDL, Y-SECTION - 110BU TANK - SINGLE SHOOT - 8 ZONE - 630

ITEM	QTY.	PART NO.	DESCRIPTION
1	1	500880-1	ASSY, Y-SECTION - SINGLE SHOOT - 8 ZONE - NOVA - BLK

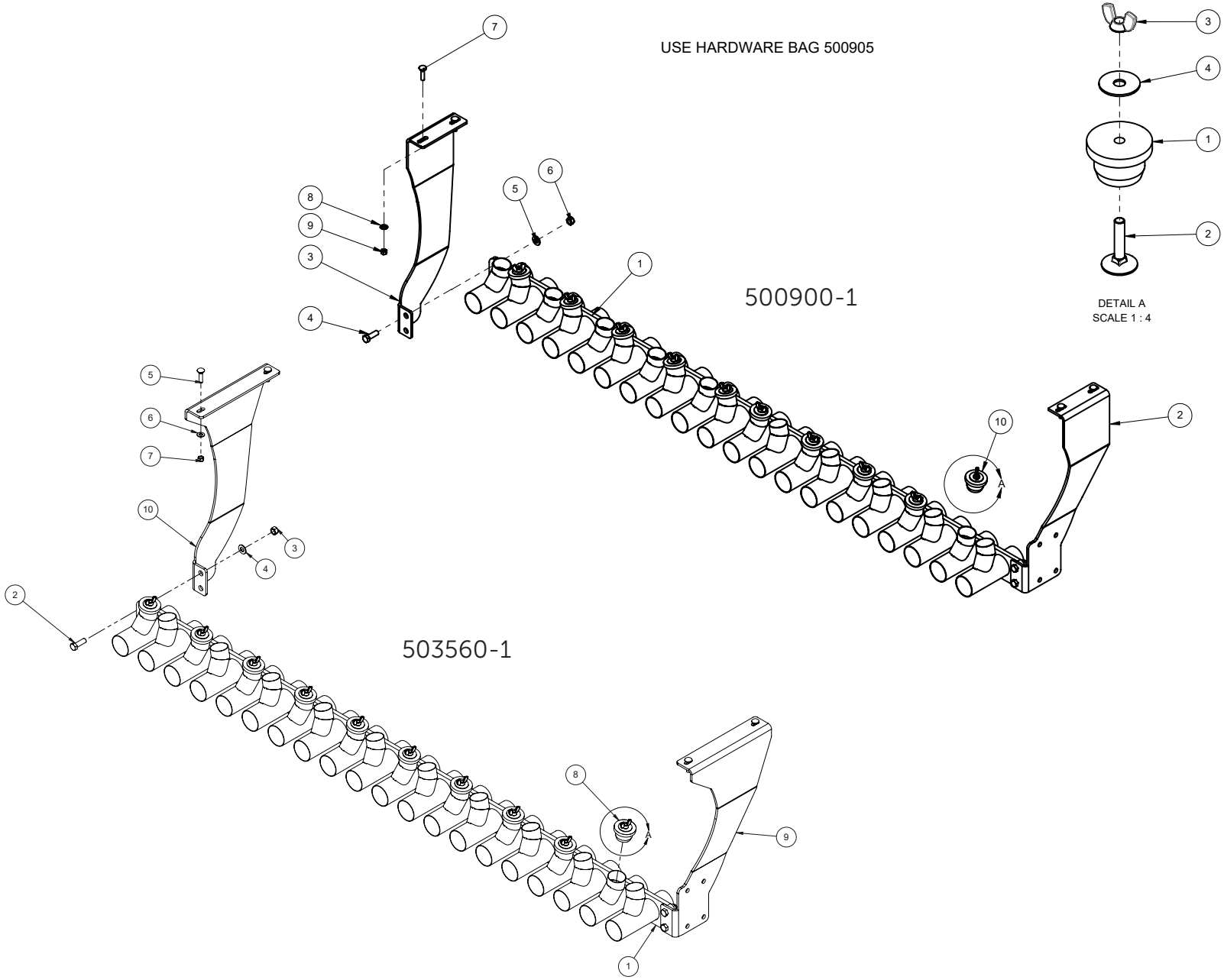
USE HARDWARE BAG 500905
500900-1
503560-1
DETAIL A
SCALE 1 : 4

Parts Description:

T/B Nova Y-Section Bundle

Main Tank

Part Number: 503425-1 – Dual Shoot 10 Zone
503515-1 – Single Shoot 10 Zone
503350-1 – Dual Shoot 8 Zone
503525-1 – Single Shoot 8 Zone

110 BU Tank

Part Number: 503370-1 – Dual Shoot 10 Zone
503520-1 – Single Shoot 10 Zone
503430-1 – Dual Shoot 8 Zone
503530-1 – Single Shoot 8 Zone

DETAIL A - 500120 - ASSY, PLUG - Y SECTION - NOVA

ITEM	QTY.	PART NO.	DESCRIPTION
1	1	500122	PLUG, AIR - 2IN PIPE - GRIPPER - DURO - 55A
2	1	250110	BOLT, ELEVATOR - 3/8 X 2 IN UNC GR5 PL
3	1	250531	NUT, WING - 3/8 UNC - STAINLESS
4	1	500121	SHEET, 14 GA - WASHER - PLUG - Y SECTION

503425-1 - BDL, Y-SECTION - DUAL SHOOT - T/B NOVA

ITEM	QTY.	PART NO.	DESCRIPTION
1	1	500910-3	ASSY, Y-SECTION - DUAL SHOOT - NOVA - BLK
2	1	503356-1	PLATE, FRMD 1/4 IN - Y SECTION HANGER - RH T/B NOVA - BLK
3	1	503357-1	PLATE, FRMD 1/4 IN - Y SECTION HANGER - LH - BLK
4	4	250001	BOLT, HEX 1/2 X 1 1/2 IN GR5 PL
5	4	250450	NUT, HEX 1/2 UNC GR5 PL
6	4	250555	WASHER, FLAT - 1/2 IN - GR8 - PL
7	4	250100	BOLT, CARRIAGE - 3/8 X 1 1/2IN UND GR5 PL
8	4	250557	WASHER, FLAT - 3/8 IN GR8 PL
9	4	250453	NUT, HEX - 3/8 UNC PL
10	10	500120	ASSY, PLUG - Y SECTION - NOVA

503515-1 (Substitute Items Below) - BDL, Y-SECTION - SINGLE SHOOT - T/B NOVA

ITEM	QTY.	PART NO.	DESCRIPTION
1	1	500915-2	ASSY, Y-SECTION - SINGLE SHOOT - NOVA - BLK

503350-1 (Substitute Items Below) - BDL, Y-SECTION - DUAL SHOOT - 8 ZONE - T/B NOVA

ITEM	QTY.	PART NO.	DESCRIPTION
1	1	500882-2	ASSY, Y-SECTION - DUAL SHOOT - 8 ZONE - NOVA - BLK

503525-1 (Substitute Items Below) - BDL, Y-SECTION - SINGLE SHOOT - 8 ZONE - T/B NOVA

ITEM	QTY.	PART NO.	DESCRIPTION
1	1	500880-1	ASSY, Y-SECTION - SINGLE SHOOT - 8 ZONE - NOVA - BLK

503370-1 - BDL, Y-SECTION - 110BU TANK - DUAL SHOOT - T/B NOVA

ITEM	QTY.	PART NO.	DESCRIPTION
1	1	500910-3	ASSY, Y-SECTION - DUAL SHOOT - NOVA - BLK
2	1	503381-2	PLATE, FRMD 1/4 IN - Y SEC HANGER - LH - 110BU TANK - T/B NOVA
3	1	503382-2	PLATE, FRMD 1/4 IN - Y SECTION HANGER - LH - BLK
4	4	250001	BOLT, HEX 1/2 X 1 1/2 IN GR5 PL
5	4	250450	NUT, HEX 1/2 UNC GR5 PL
6	4	250555	WASHER, FLAT - 1/2 IN - GR8 - PL
7	4	250100	BOLT, CARRIAGE - 3/8 X 1 1/2IN UND GR5 PL
8	4	250453	NUT, HEX - 3/8 UNC PL
9	4	250557	WASHER, FLAT - 3/8 IN GR8 PL
10	10	500120	ASSY, PLUG - Y SECTION - NOVA

503520-1 (Substitute Items Below) - BDL, Y-SECTION - 110BU TANK - SINGLE SHOOT - T/B NOVA

ITEM	QTY.	PART NO.	DESCRIPTION
1	1	500915-2	ASSY, Y-SECTION - SINGLE SHOOT - NOVA - BLK

503430-1 (Substitute Items Below) - BDL, Y-SECTION - 110BU TANK - DUAL SHOOT - 8 ZONE - T/B

ITEM	QTY.	PART NO.	DESCRIPTION
1	1	500882-2	ASSY, Y-SECTION - DUAL SHOOT - 8 ZONE - NOVA - BLK

503530-1 (Substitute Items Below) - BDL, Y-SECTION - 110BU TANK - SINGLE SHOOT - 8 ZONE - T/B

ITEM	QTY.	PART NO.	DESCRIPTION
1	1	500880-1	ASSY, Y-SECTION - SINGLE SHOOT - 8 ZONE - NOVA - BLK

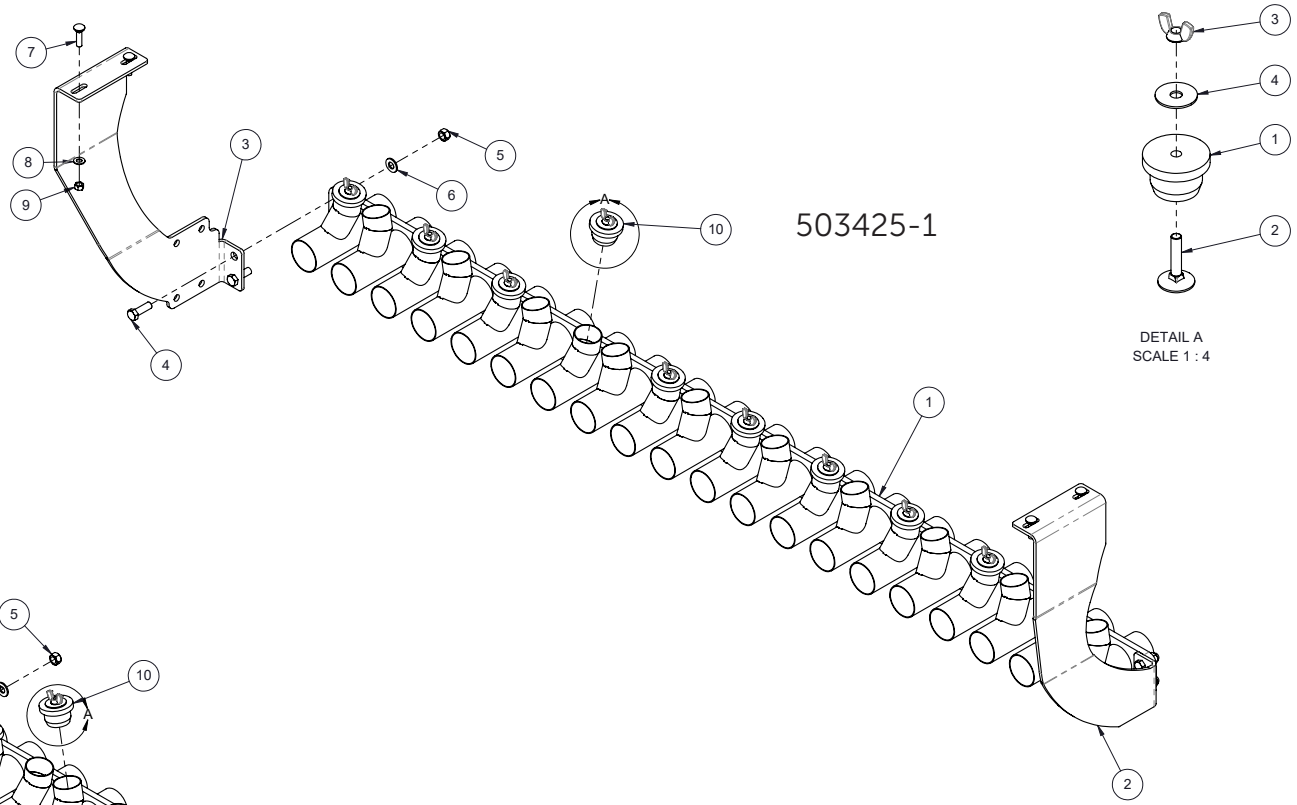
503425-1
DETAIL A
SCALE 1 : 4

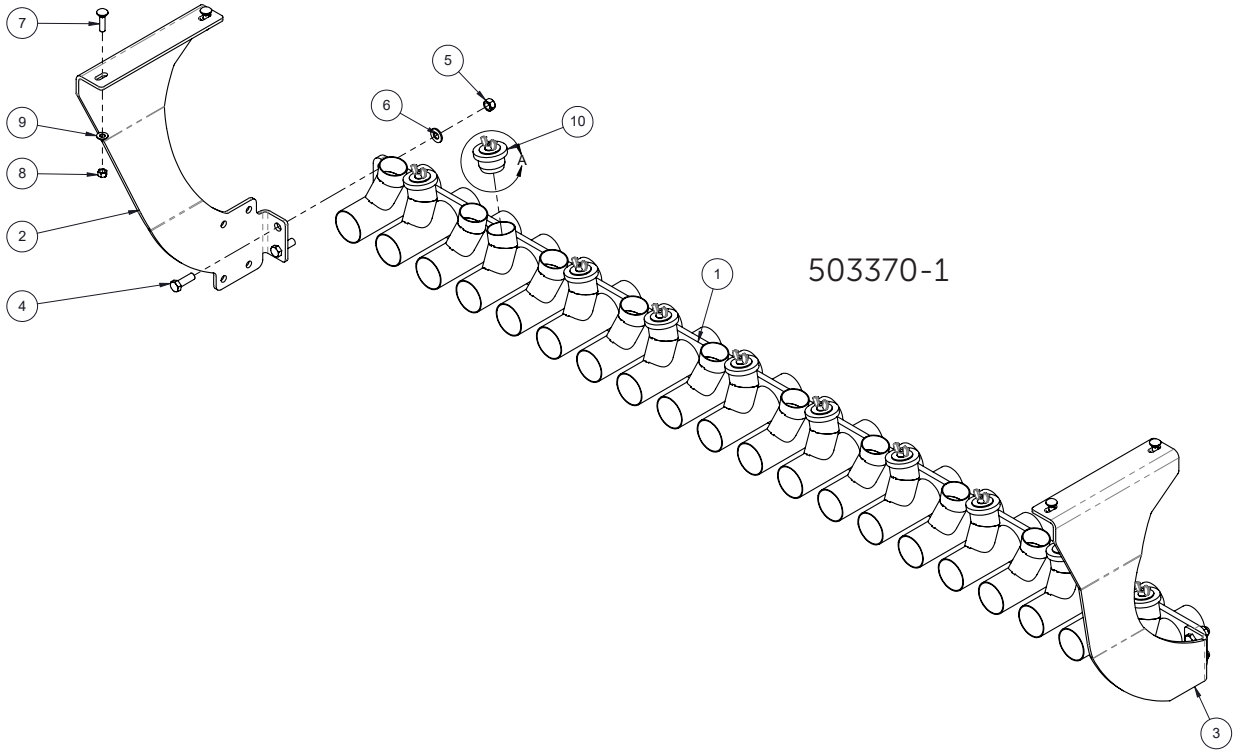
503370-1

Parts Description:

Fans/Air Splitter

Part Number: 500825-1 – Dual Shoot 10 Zone
501065-1 – Single Shoot 10 Zone
501070-1 – Single Shoot 08 Zone
501071-1 – Dual Shoot 08 Zone

500825-1 - BDL, AIR SPLITTER - DUAL S3 - NOVA			
ITEM	QTY.	PART NO.	DESCRIPTION
1	1	501460	ASSY, AIR SPLITTER - S3 - DUAL - NOVA
2	20	500830	ASSY, AIR GATE - 2 1/2 IN HOSE - AIR SPLITTER - NOVA - BLK
3	2	258404	MOTOR, HYD - 6 IN FAN - SAUER-DANFOSS - 11CC - 3/4 OUTPUT
4	4	250093	BOLT, HEX 3/8 X 1 3/4 IN GR5 PL
5	58	250101	BOLT, CARRIAGE - 3/8 X 1 1/4 IN UNC GR5 PL
6	40	250635	BOLT RETAINER - 3/8 IN
7	63	250400	NUT, FLANGE - 3/8 UNC PL
8	4	250619	PIN, COTTER 1/8 X 1 1/4
9	6	250019	BOLT, HEX 3/8 X 1 1/4 IN GR5 PL
10	4	250014	BOLT, HEX 3/4 X 2 UNC GR5 PL
11	4	250552	WASHER, FLAT 3/4IN GR8 PL
12	4	250451	NUT, HEX 3/4 UNC GR5 PL
13	8	250557	WASHER, FLAT - 3/8 IN GR8 PL
14	4	250453	NUT, HEX - 3/8 UNC PL
15	1	250103	BOLT, CARRIAGE - 3/8 X 3/4 IN UNC GR5 PL
16	2	255910	GAUGE, PRESSURE - AIR - P734 2.5 0-36 OUNCES 1/4LM BRASS
17	2	250555	WASHER, FLAT - 1/2 IN - GR8 - PL
18	2	260090	HOSE BARB, 1/4 FPT X 1/4 HB
19	2	255931	COUPLER, JAW - QUICKFLEX - S3 FAN - 1-1/8 SHAFT
20	2	255930	COUPLER, JAW - QUICKFLEX - S3 FAN - 3/4 SHAFT
21	2	255933	COUPLER, COVER - QUICKFLEX - S3 FAN
22	1	501490	PLATE, FRMD 10GA - GAUGE MNT - AIR SPLITTER - DUAL S3 - NOVA
23	2	255920	FAN - S3 - RT-176 C/W MOTOR MNT
24	2	255932	COUPLER, INSERT - QUICKFLEX - WHITE - S3 FAN
25	1	501495	ASSY, RPM SENSOR MNT - S3 FAN
26	2	501494	SHEET, FRMD 10GA - S3 RPM PICKUP
501065-1 (SUBSTITUTE ITEMS BELOW) - BDL, AIR SPLITTER - SINGLE S3 - NOVA			
ITEM	QTY	PART NO.	DESCRIPTION
1	1	501480	ASSY, AIR SPLITTER - S3 - SINGLE - NOVA

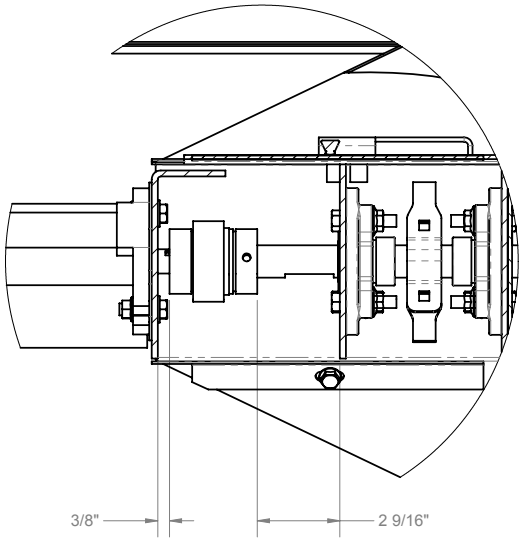

DETAIL A
SCALE 1 : 4

NOTE: COUPLER INSTALLATION DETAIL

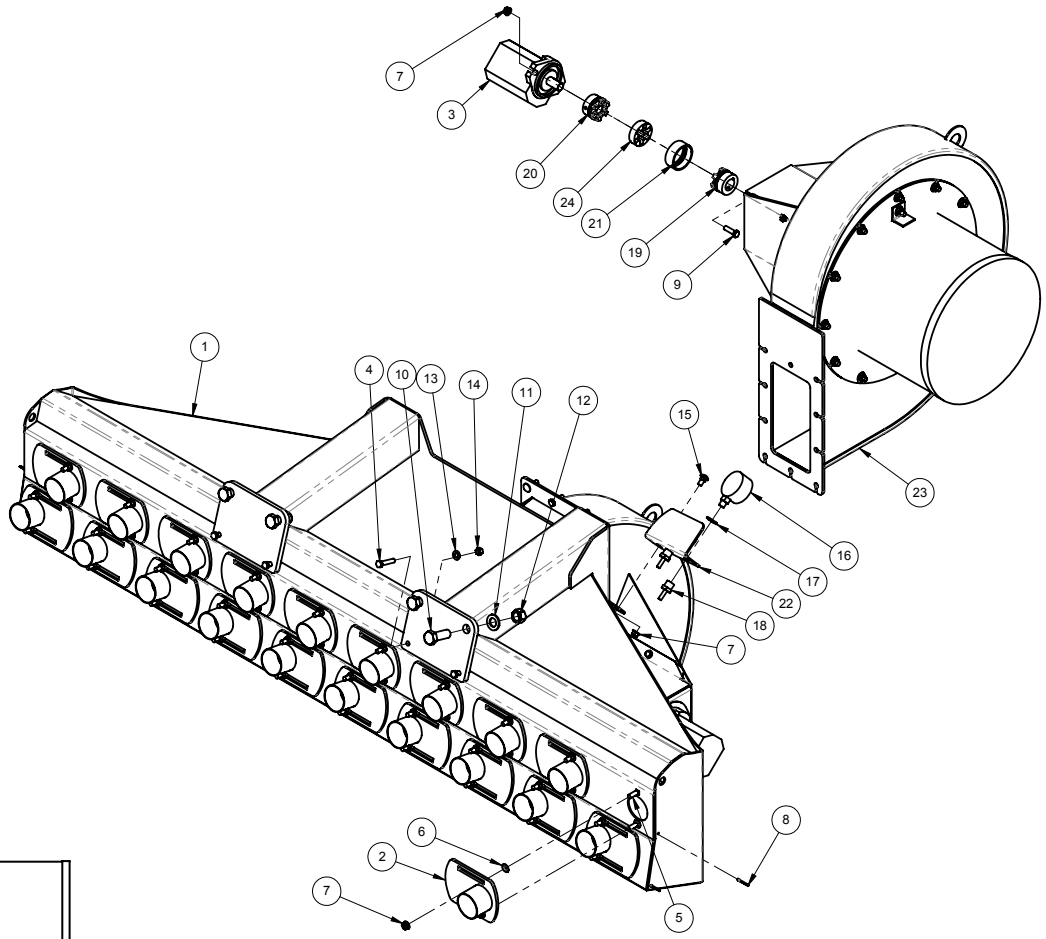

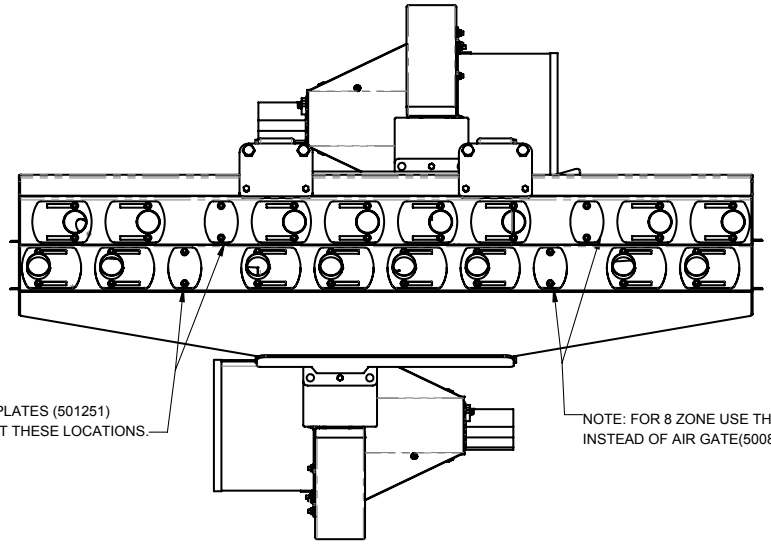

NOTE: FOR 8 ZONE USE THESE PLATES (501251)
INSTEAD OF AIR GATE(500830) AT THESE LOCATIONS.

NOTE: FOR 8 ZONE USE THESE PLATES (501251)
INSTEAD OF AIR GATE(500830) AT THESE LOCATIONS.

Parts Description:

Fans/Air Splitter - T/B Nova

Part Number: 503450 – Dual Shoot 10 Zone
503440 – Single Shoot 10 Zone
503455 – Single Shoot 08 Zone
503250 – Dual Shoot 08 Zone

503450 - BDL, AIR SPLITTER - DUAL S3 - T/B NOVA			
ITEM	QTY.	PART NO.	DESCRIPTION
1	1	503650-1	ASSY, AIR SPLITTER - S3 - DUAL 8 IN - T/B NOVA - BLK
2	20	500830	ASSY, AIR GATE - 2 1/2 IN HOSE - AIR SPLITTER - NOVA - BLK
3	2	258404	MOTOR, HYD - 6 IN FAN - SAUER-DANFOSS - 11CC - 3/4 OUTPUT
4	2	255920	FAN - S3 - RT-176 C/W MOTOR MNT
5	2	255932	COUPLER, INSERT - QUICKFLEX - WHITE - S3 FAN
6	1	503253	PLATE, FRMD 10GA - GAUGE MNT - AIR SPLITTER - DUAL S3 - T/B
7	58	250101	BOLT, CARRIAGE - 3/8 X 1 1/4 IN UNC GR5 PL
8	40	250635	BOLT RETAINER - 3/8 IN
9	63	250400	NUT, FLANGE - 3/8 UNC PL
10	4	250619	PIN, COTTER 1/8 X 1 1/4
11	6	250019	BOLT, HEX 3/8 X 1 1/4 IN GR5 PL
12	1	250103	BOLT, CARRIAGE - 3/8 X 3/4 IN UNC GR5 PL
13	2	255910	GAUGE, PRESSURE - AIR - P734 2.5 0-36 OUNCES 1/4LM BRASS
14	2	250555	WASHER, FLAT - 1/2 IN - GR8 - PL
15	2	260090	HOSE BARB, 1/4 FPT X 1/4 HB
16	4	250557	WASHER, FLAT - 3/8 IN GR8 PL
17	2	255931	COUPLER, JAW - QUICKFLEX - S3 FAN - 1-1/8 SHAFT
18	2	255930	COUPLER, JAW - QUICKFLEX - S3 FAN - 3/4 SHAFT
19	2	255933	COUPLER, COVER - QUICKFLEX - S3 FAN
20	4	250220	BOLT, U-SQ - 3/4 UNC X 8 ID X 10 IN -2 IN THD - GR8 PL
21	8	250451	NUT, HEX 3/4 UNC GR5 PL
22	8	250552	WASHER, FLAT 3/4IN GR8 PL
503440 (Substitute Items Below) - BDL, AIR SPLITTER - SINGLE S3 - T/B NOVA			
ITEM	QTY	PART NO.	DESCRIPTION
1	1	501480	ASSY, AIR SPLITTER - S3 - SINGLE - NOVA

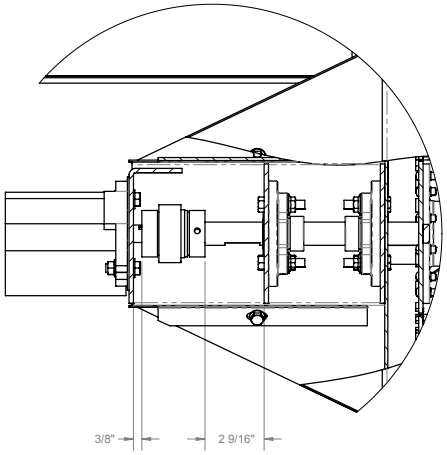

DETAIL A
SCALE 1 : 4

NOTE: COUPLER INSTALLATION DETAIL

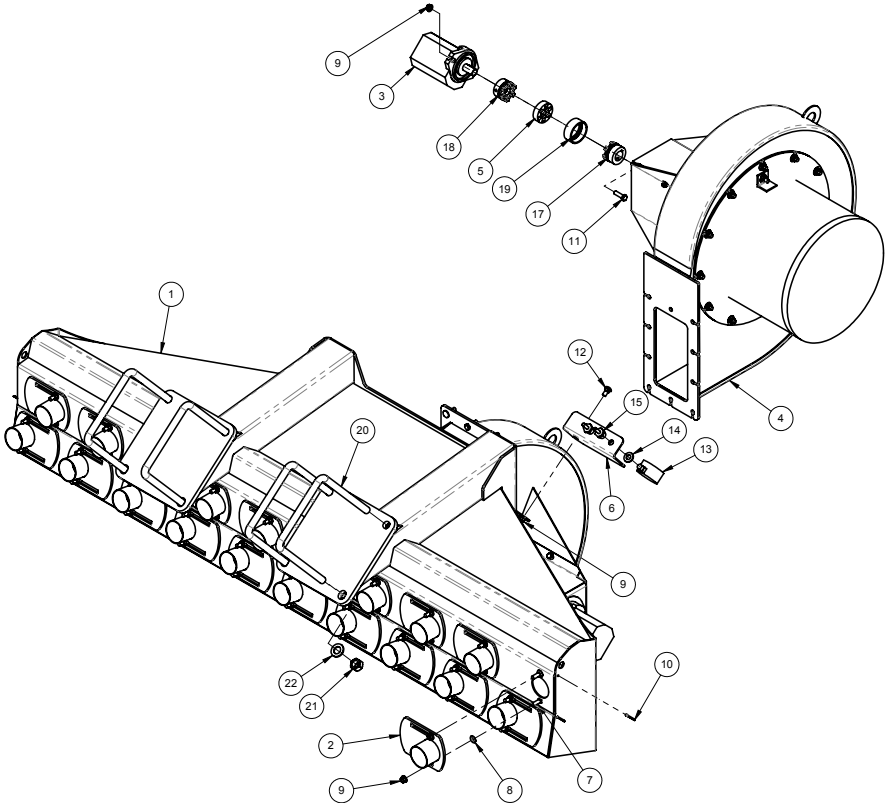

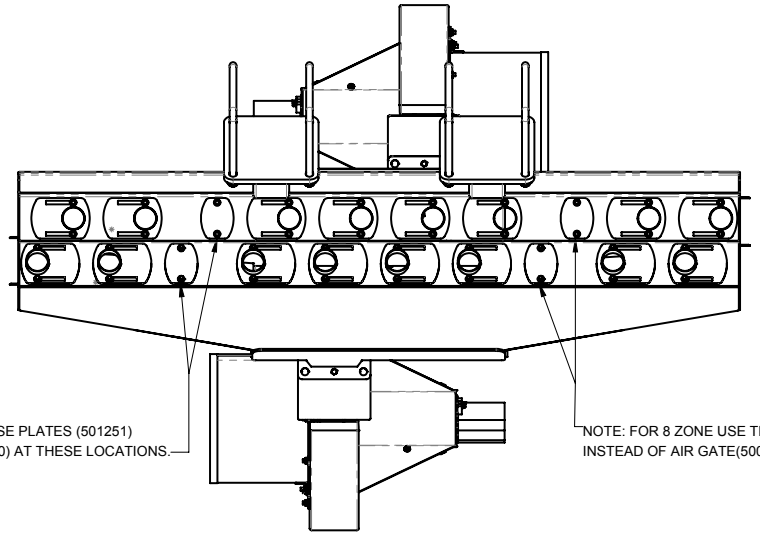

NOTE: FOR 8 ZONE USE THESE PLATES (501251)
INSTEAD OF AIR GATE(500830) AT THESE LOCATIONS.

NOTE: FOR 8 ZONE USE THESE PLATES (501251)
INSTEAD OF AIR GATE(500830) AT THESE LOCATIONS.

Parts Description:

Rear Walkway - 820/560 Nova

Part Number: 500650 – Dual Shoot 10 Zone
501060 – Single Shoot 10 Zone
501077 – Single Shoot 08 Zone
501078 – Dual Shoot 08 Zone

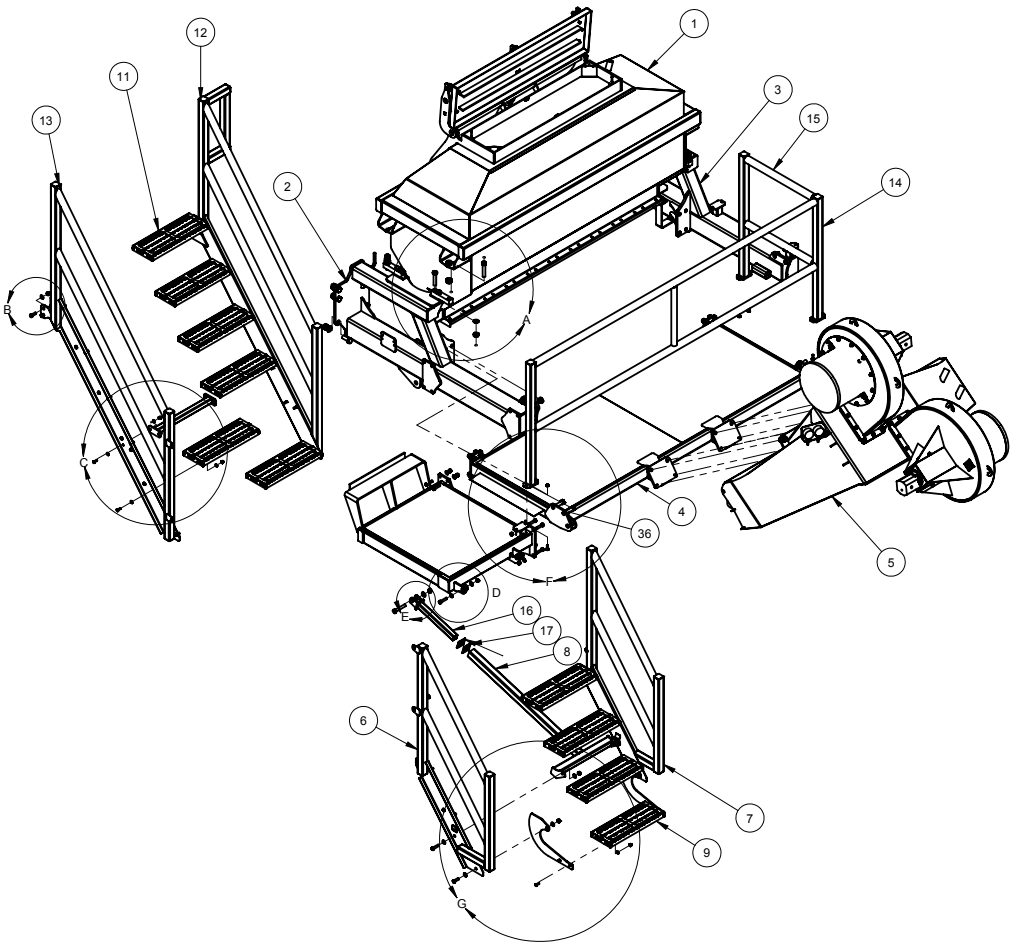

500650 - BDL, CANOLA TANK ADD ON C/W WALKWAY AND DUAL SHOOT			
ITEM	QTY.	PART NO.	DESCRIPTION
1	1	500660	BDL, CANOLA TANK - 10 ZONE - NOVA
2	1	500716-5	ASSY, CANOLA TANK MNT - LH - NOVA - BLK
3	1	500715-3	ASSY, CANOLA TANK MNT - RH - NOVA - BLK
4	1	500740-7	ASSY, PLATFORM - AIR CART REAR WALKWAY
5	1	500825-1	BDL, AIR SPLITTER - DUAL S3 - NOVA
6	1	500771-1	ASSY, HANDRAIL - LH - REAR STAIR - NOVA
7	1	500770-1	ASSY, HANDRAIL - RH - REAR STAIR - NOVA
8	1	500764-1	ASSY, SUPPORT - REAR STAIR - NOVA - BLK
9	1	501090	ASSY, STAIR TREAD - 7 1/14 X 20 - BLK
10	2	500790	PLATE, 1/4 IN - SIDE - REAR FLIP STEP - BLK
11	9	501080	ASSY, STAIR TREAD - 7 1/4 X 20 31/32 - BLK
12	1	500795-1	ASSY, HANDRAIL - RH - TOP STAIR - NOVA
13	1	500796-1	ASSY, HANDRAIL - LH - TOP STAIR - NOVA
14	1	500760-2	ASSY, HAND RAIL - REAR WALKWAY - NOVA
15	1	500280-2	ASSY, HAND RAIL - SIDE WALK - NOVA - BLK
16	1	500794	ASSY, SUPPORT - REAR STAIR - NOVA - BLK
17	2	500797	SHEET, 12AG - SPACER - NOVA REAR STAIR
18	1	500780	ASSY, REAR STAIR BRACE - NOVA XP 820
19	6	250001	BOLT, HEX 1/2 X 1 1/2 IN GR5 PL
20	16	250555	WASHER, FLAT - 1/2 IN - GR8 - PL
21	48	250036	BOLT, HEX 3/8 X 1 IN GR5 PL
22	88	250557	WASHER, FLAT - 3/8 IN GR8 PL
23	4	250450	NUT, HEX 1/2 UNC GR5 PL
24	44	250453	NUT, HEX - 3/8 UNC PL
25	1	250002	BOLT, HEX 5/8 X 3 3/4 UNC GR8 PL
26	1	250550	WASHER, FLAT 5/8 IN GR8 PL
27	1	250500	NUT, LOCK 5/8 UNC - STOVER - PL
28	2	250048	BOLT, HEX 1/2 X 2 IN GR5 PL
29	2	250000	BOLT, HEX 1/2 X 2 1/4 IN GR5 PL
30	6	250504	NUT, LOCK - 1/2 UNC - STOVER - PL
31	12	250006	BOLT, HEX 7/8 X 2 1/4 UNC GR5 PL
32	12	250553	WASHER, FLAT 7/8IN GR8 PL
33	12	250452	NUT, HEX - 7/8 UNC PL
34	10	250400	NUT, FLANGE - 3/8 UNC PL
35	6	250101	BOLT, CARRIAGE - 3/8 X 1 1/4 IN UNC GR5 PL
36	4	250003	BOLT, HEX 3/4 X 2 1/2 UNC GR5 PL
37	24	250552	WASHER, FLAT 3/4IN GR8 PL
38	12	250451	NUT, HEX 3/4 UNC GR5 PL
39	8	250047	BOLT, HEX 5/8 X 2 UNC GR5 PL
40	8	250455	NUT, HEX 5/8 UNC GR5 PL
41	4	403849	BUSH, 1.500 OD X .75 ID X 3/4 IN
42	8	250082	BOLT, HEX 3/4 X 3 3/4 UNC GR5 PL
43	4	250094	BOLT, HEX 3/4 X 4 UNF GR5 PL
44	1	500886	ASSY, PLATFORM - REAR WALKWAY - NOVA
45	1	406532	ANTI-SLIP TAPE - 4" x 60', BLACK - ULINE
46	4	270173	LOAD CELL - 1.5SB 10K LB - SCALETEC
501060 (Substitute Items Below)			
ITEM	QTY.	PART NO.	DESCRIPTION
5	1	501065-1	BDL, AIR SPLITTER - SINGLE S3 - NOVA
501077 (Substitute Items Below)			
ITEM	QTY.	PART NO.	DESCRIPTION
1	1	500655	BDL, CANOLA TANK - 8 ZONE - NOVA
5	1	501070-1	BDL, AIR SPLITTER - SINGLE S3 - 8 ZONE
501078 (Substitute Items Below)			
ITEM	QTY.	PART NO.	DESCRIPTION
1	1	500655	BDL, CANOLA TANK - 8 ZONE - NOVA
5	1	501071-1	BDL, AIR SPLITTER - DUAL S3 - 8 ZONE-NOVA

USE HARDWARE BAG 500710, 500711, 500712

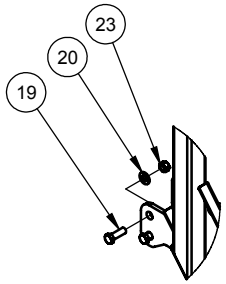

DETAIL B
SCALE 1 : 15

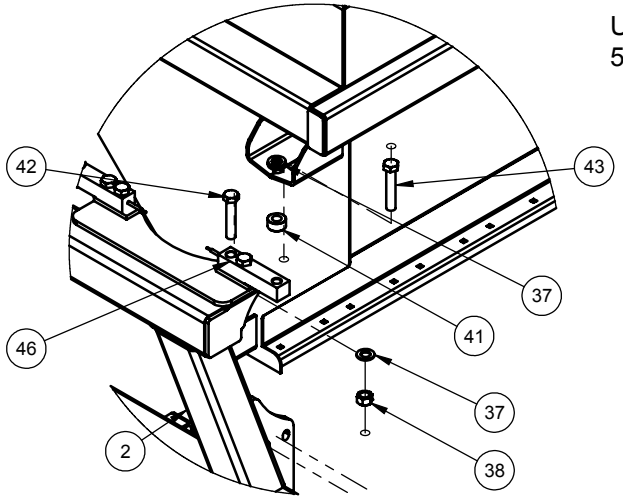

DETAIL A
SCALE 1 : 15

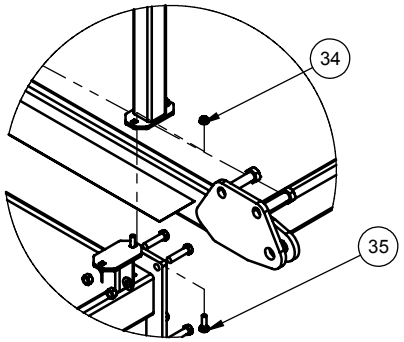

DETAIL F
SCALE 1 : 15

NOTE : SOME ITEMS SHOWN IN THIS VIEW ARE FROM BDL 403981

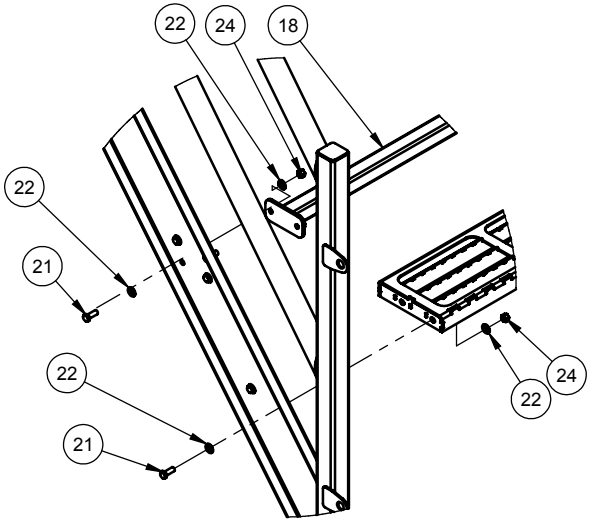

DETAIL C
SCALE 1 : 15

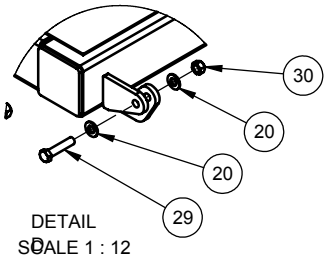

DETAIL D
SCALE 1 : 12

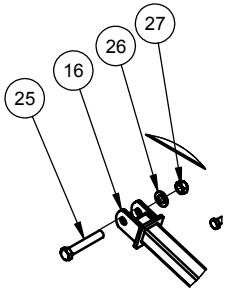

DETAIL E
SCALE 1 : 15

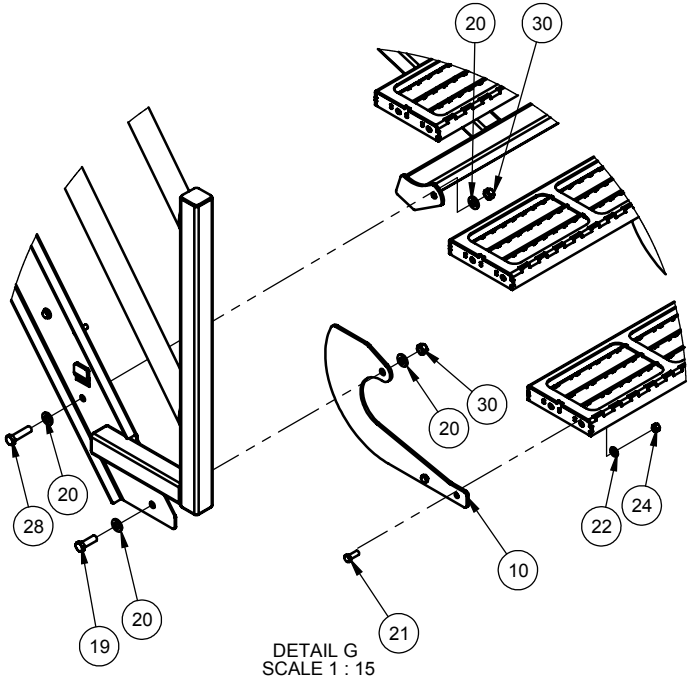

DETAIL G
SCALE 1 : 15

Parts Description:

Rear Walkway - 780/520 Nova

Part Number: 501050 – Dual Shoot 10 Zone
501000 – Single Shoot 10 Zone
501075 – Single Shoot 08 Zone
501076 – Dual Shoot 08 Zone

501050 - BDL, DUAL FAN AND STAIR MOUNT - 780BU NOVA			
ITEM	QTY.	PART NO.	DESCRIPTION
1	1	501005-6	ASSY, FAN AND STAIR MOUNT - 780 BU NOVA
2	1	500825-1	BDL, AIR SPLITTER - DUAL S3 - NOVA
3	1	501015	ASSY, SINGLE SHOOT HANDRAIL RH - NOVA - BLK
4	1	501090	ASSY, STAIR TREAD - 7 1/14 X 20 - BLK
5	2	500790	PLATE, 1/4 IN - SIDE - REAR FLIP STEP - BLK
6	9	501080	ASSY, STAIR TREAD - 7 1/14 X 20 31/32 - BLK
7	1	501020	ASSY, SINGLE SHOOT HANDRAIL LH - NOVA - BLK
8	6	250450	NUT, HEX 1/2 UNC GR5 PL
9	6	250001	BOLT, HEX 1/2 X 1 1/2 IN GR5 PL
10	10	250555	WASHER, FLAT - 1/2 IN - GR8 - PL
11	2	250504	NUT, LOCK - 1/2 UNC - STOVER - PL
12	2	250013	BOLT, HEX 1/2 X 1 1/4 IN GR5 PL
13	12	250006	BOLT, HEX 7/8 X 2 1/4 UNC GR5 PL
14	12	250452	NUT, HEX - 7/8 UNC PL
15	12	250553	WASHER, FLAT 7/8IN GR8 PL
16	40	250453	NUT, HEX - 3/8 UNC PL
17	80	250557	WASHER, FLAT - 3/8 IN GR8 PL
18	40	250036	BOLT, HEX 3/8 X 1 IN GR5 PL
501000 (Substitute Items Below) - BDL, SINGLE SHOOT AIRSPLITTER AND STAIRS - 780BU			
ITEM	QTY.	PART NO.	DESCRIPTION
2	1	501065-1	BDL, AIR SPLITTER - SINGLE S3 - NOVA
501075 (Substitute Items Below) - BDL, SINGLE SHOOT AIRSPLITTER AND STAIRS - 8 ZONE			
ITEM	QTY.	PART NO.	DESCRIPTION
2	1	501070-1	BDL, AIR SPLITTER - SINGLE S3 - 8 ZONE - NOVA
501076 (Substitute Items Below) - BDL, DUAL FAN AND STAIR MOUNT - 8 ZONE- 520/780BU			
ITEM	QTY.	PART NO.	DESCRIPTION
2	1	501071-1	BDL, AIR SPLITTER - DUAL S3 - 8 ZONE - NOVA

USE HARDWARE BAG
501002

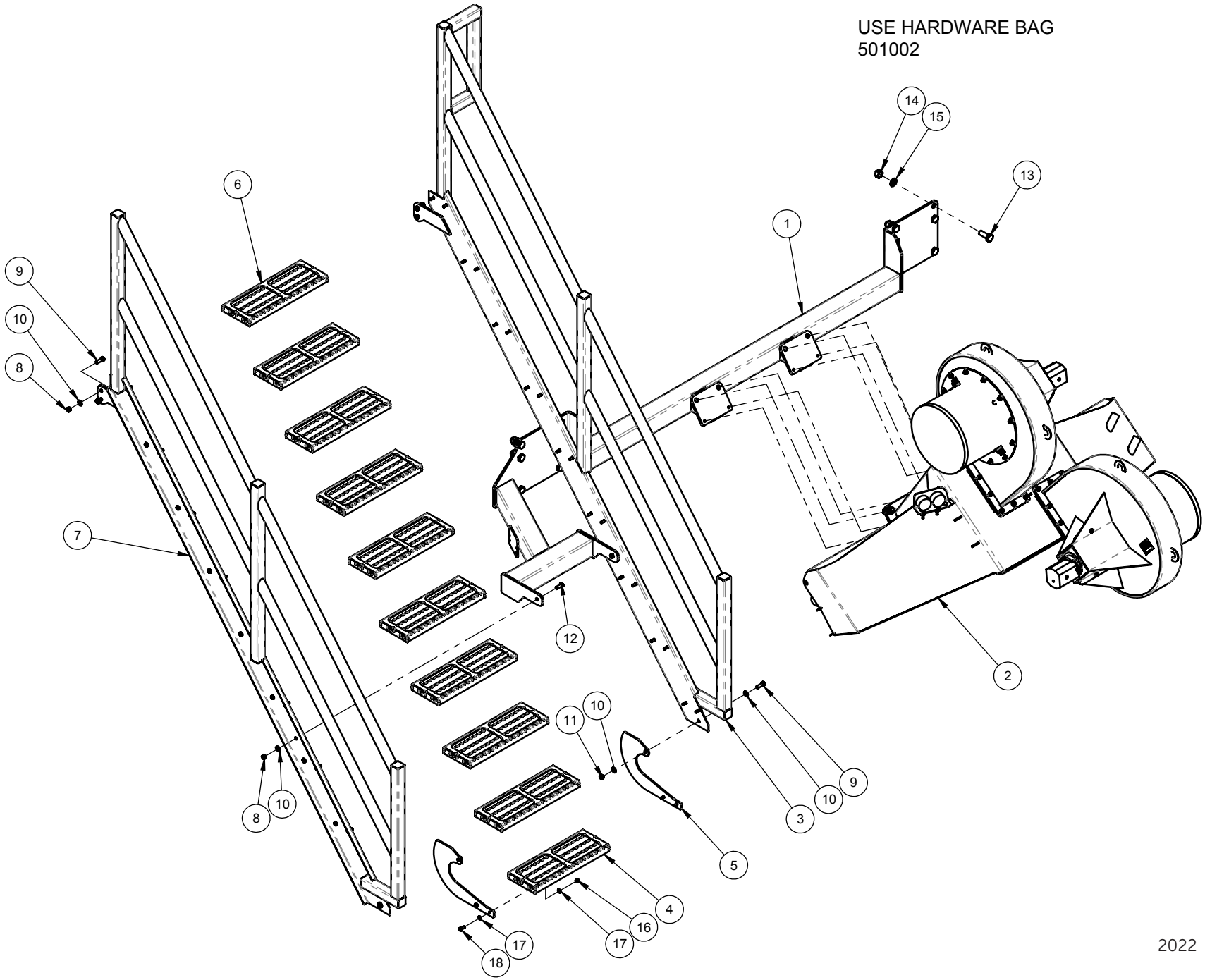

Parts Description:

Side Walkway - 780/820 Nova

Part Number: 500245

ITEM	QTY.	PART NO.	DESCRIPTION
1	1	500290-4	ASSY, MOUNT - FRT - SIDE WALK - NOVA - BLK
2	1	500282	ASSY, HAND RAIL - SIDE WALK - NOVA - BLK
3	1	500270	ASSY, SIDE HAND RAIL - NOVA - 780/820BU - BLK
4	1	500300-5	ASSY, MNT - REAR - SIDE WALK - NOVA - BLK
5	1	500250-4	ASSY, PLATFORM - SIDE WALKWAY - NOVA - 780/820BU - BLK
6	1	500285	PLATE, FRMD 3/8 IN - BRACKET - SIDE WALKWAY - NOVA - BLK
7	2	501620	BDL, BETWEEN TANK STEP - NOVA
8	4	250232	BOLT, U-SQ - 3/4 UNC X 12 ID X 10 IN - 2 IN THD - GR8 PL
9	8	250552	WASHER, FLAT 3/4IN GR8 PL
10	8	250451	NUT, HEX 3/4 UNC GR5 PL
11	8	250104	BOLT, CARRIAGE - 1/2 X 1 1/2IN UNC GR5 PL
12	8	250401	NUT, FLANGE - 1/2 UNC PL
13	8	250101	BOLT, CARRIAGE - 3/8 X 1 1/4 IN UNC GR5 PL
14	12	250400	NUT, FLANGE - 3/8 UNC PL
15	4	250019	BOLT, HEX 3/8 X 1 1/4 IN GR5 PL
16	1	500289	PLATE, FRMD 3/8 IN - U-BRACKET - SIDE WALKWAY - NOV

USE HARDWARE BAG 500389
USE HARDWARE BAGS 501621 FOR BETWEEN TANK STEPS

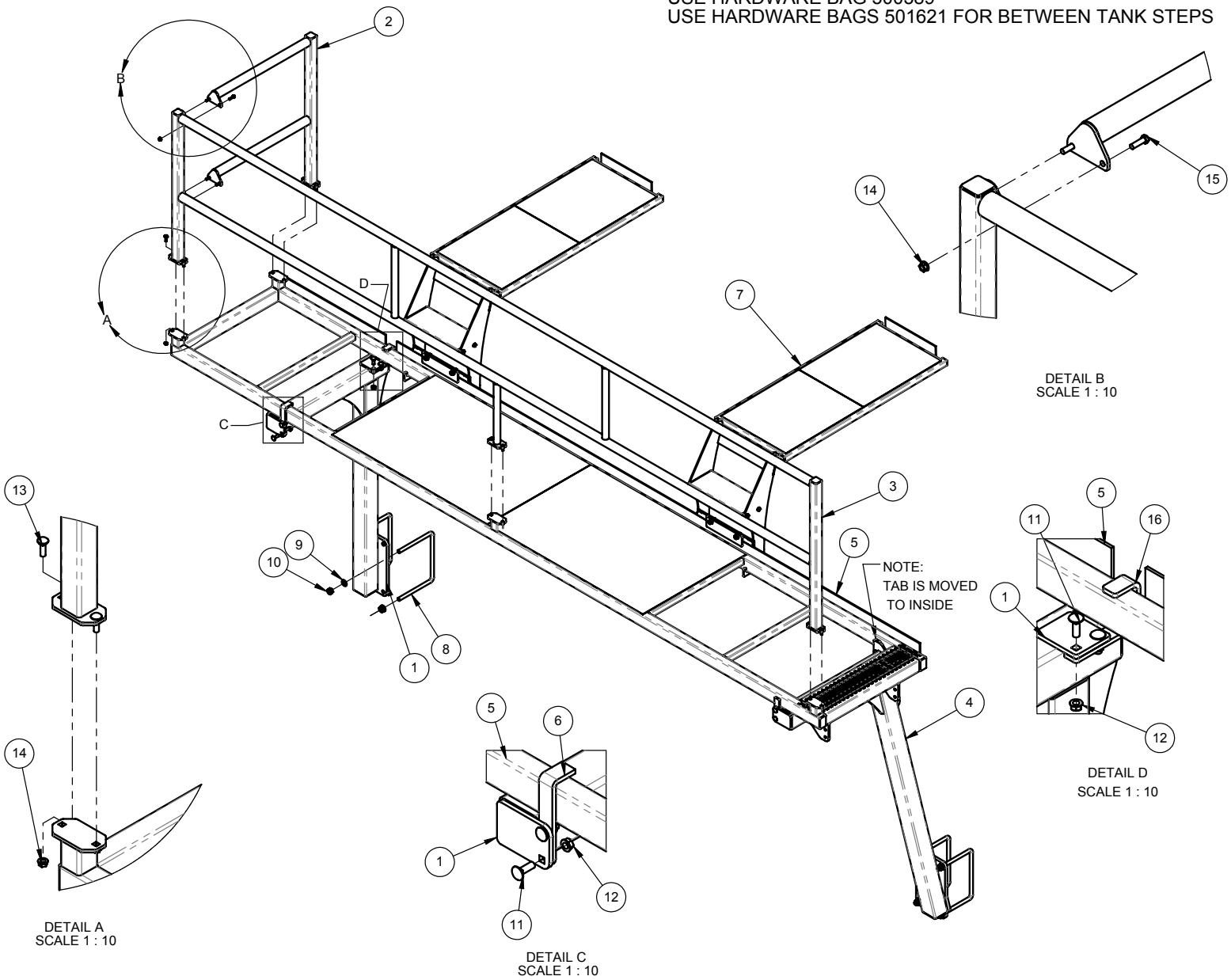

Parts Description:

Side Walkway - 630 T/B Nova

Part Number: 503200

ITEM	QTY.	PART NO.	DESCRIPTION
1	1	503810-1	ASSY, PLATFORM - SIDE WALKWAY
2	1	500300-5	ASSY, MNT - REAR - SIDE WALK - NO
3	1	500290-4	ASSY, MOUNT - FRT - SIDE WALK - N
4	1	500285	PLATE, FRMD 3/8 IN - BRACKET - SID
5	1	503220	ASSY, HAND RAIL - RH - T/B NOVA - BLK
6	1	503815-1	ASSY, SIDE HAND RAIL - SIDE WALKW
7	1	500282	ASSY, HAND RAIL - SIDE WALK - NOV
8	1	503230	ASSY, HAND RAIL LH - T/B NOVA - BLK
9	8	501080	ASSY, STAIR TREAD - 7 1/4 X 20 31/32
10	1	503240-1	ASSY, FRONT HANDRAIL - T/B NOVA
11	1	501090	ASSY, STAIR TREAD - 7 1/4 X 20 - BLK
12	2	500790	PLATE, 1/4 IN - SIDE - REAR FLIP STE
13	1	503205-1	ASSY, REAR MNT - SIDE WALKWAY -
14	8	250104	BOLT, CARRIAGE - 1/2 X 1 1/2IN UNC
15	36	250453	NUT, HEX - 3/8 UNC PL
16	72	250557	WASHER, FLAT - 3/8 IN GR8 PL
17	36	250036	BOLT, HEX 3/8 X 1 IN GR5 PL
18	2	250013	BOLT, HEX 1/2 X 1 1/4 IN GR5 PL
19	6	250450	NUT, HEX 1/2 UNC GR5 PL
20	10	250555	WASHER, FLAT - 1/2 IN - GR8 - PL
21	5	250232	BOLT, U-SQ - 3/4 UNC X 12 ID X 10 IN
22	10	250451	NUT, HEX 3/4 UNC GR5 PL
23	10	250552	WASHER, FLAT 3/4IN GR8 PL
24	8	250401	NUT, FLANGE - 1/2 UNC PL
25	10	250101	BOLT, CARRIAGE - 3/8 X 1 1/4 IN UNC
26	18	250400	NUT, FLANGE - 3/8 UNC PL
27	8	250019	BOLT, HEX 3/8 X 1 1/4 IN GR5 PL
28	6	250001	BOLT, HEX 1/2 X 1 1/2 IN GR5 PL
29	2	250504	NUT, LOCK - 1/2 UNC - STOVER - PL
30	2	501620	BDL, BETWEEN TANK STEP - NOVA
31	1	500289	PLATE, FRMD 3/8 IN - U-BRACKET - S

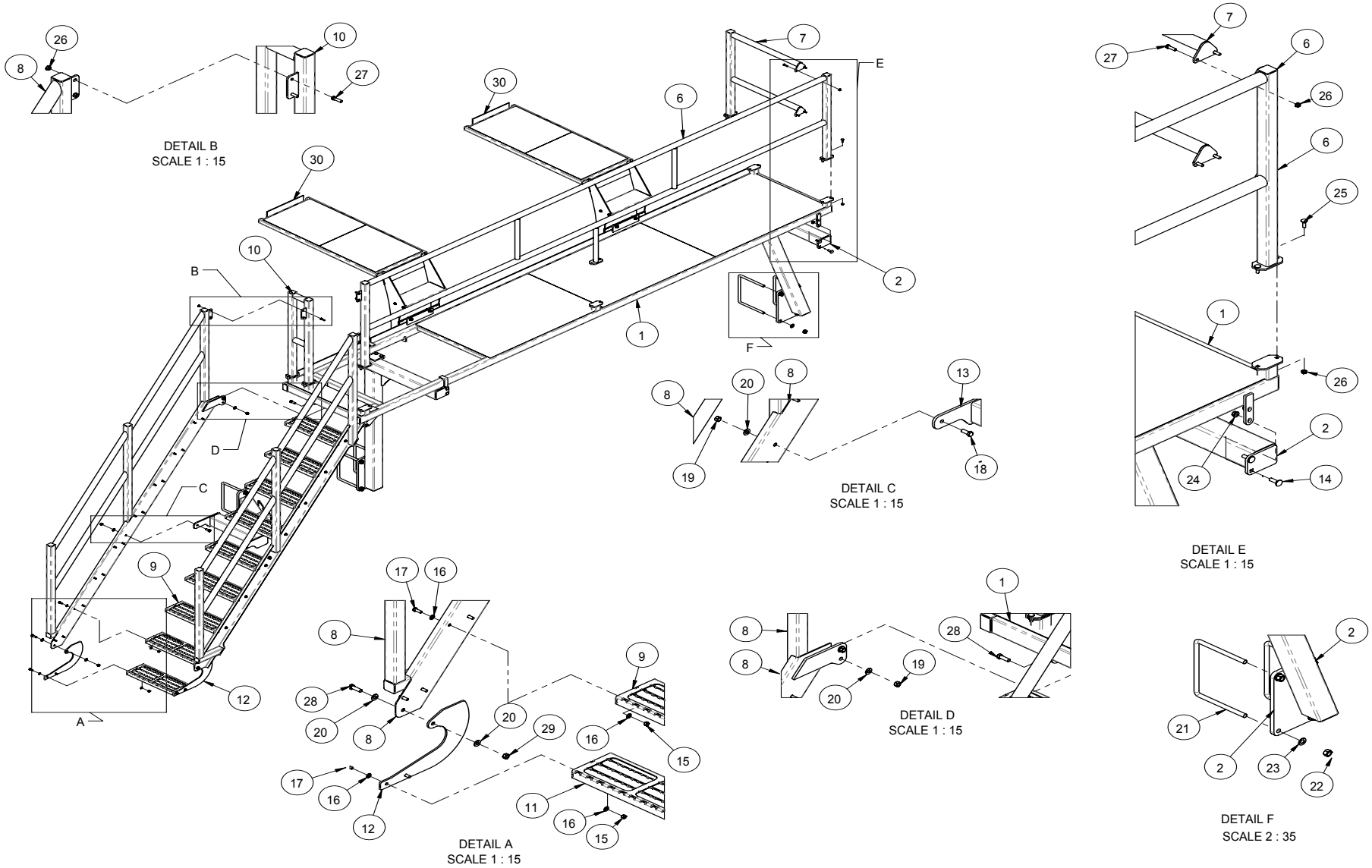
DETAIL B
SCALE 1 : 15
DETAIL C
SCALE 1 : 15
DETAIL E
SCALE 1 : 15
DETAIL A
SCALE 1 : 15
DETAIL D
SCALE 1 : 15
DETAIL F
SCALE 2 : 35

Parts Description:

Side Walkway - 780 T/B Nova

Part Number: 503800

ITEM	QTY.	PART NO.	DESCRIPTION
1	1	503810-1	ASSY, PLATFORM - SIDE WALKWAY
2	1	500300-5	ASSY, MNT - REAR - SIDE WALK - NO
3	1	500290-4	ASSY, MOUNT - FRT - SIDE WALK - N
4	1	500285	PLATE, FRMD 3/8 IN - BRACKET - SID
5	1	503220	ASSY, HAND RAIL - RH - T/B NOVA - BLK
6	1	503815-1	ASSY, SIDE HAND RAIL - SIDE WALKW
7	1	500282	ASSY, HAND RAIL - SIDE WALK - NOV
8	1	503230	ASSY, HAND RAIL LH - T/B NOVA - BLK
9	8	501080	ASSY, STAIR TREAD - 7 1/4 X 20 31/32
10	1	503240-1	ASSY, FRONT HANDRAIL - T/B NOVA
11	1	501090	ASSY, STAIR TREAD - 7 1/4 X 20 - BLK
12	2	500790	PLATE, 1/4 IN - SIDE - REAR FLIP STE
13	1	503205-1	ASSY, REAR MNT - SIDE WALKWAY -
14	8	250104	BOLT, CARRIAGE - 1/2 X 1 1/2IN UNC
15	36	250453	NUT, HEX - 3/8 UNC PL
16	72	250557	WASHER, FLAT - 3/8 IN GR8 PL
17	36	250036	BOLT, HEX 3/8 X 1 IN GR5 PL
18	2	250013	BOLT, HEX 1/2 X 1 1/4 IN GR5 PL
19	6	250450	NUT, HEX 1/2 UNC GR5 PL
20	10	250555	WASHER, FLAT - 1/2 IN - GR8 - PL
21	5	250232	BOLT, U-SQ - 3/4 UNC X 12 ID X 10 IN
22	10	250451	NUT, HEX 3/4 UNC GR5 PL
23	10	250552	WASHER, FLAT 3/4IN GR8 PL
24	8	250401	NUT, FLANGE - 1/2 UNC PL
25	10	250101	BOLT, CARRIAGE - 3/8 X 1 1/4 IN UNC
26	18	250400	NUT, FLANGE - 3/8 UNC PL
27	8	250019	BOLT, HEX 3/8 X 1 1/4 IN GR5 PL
28	6	250001	BOLT, HEX 1/2 X 1 1/2 IN GR5 PL
29	2	250504	NUT, LOCK - 1/2 UNC - STOVER - PL
30	2	501620	BDL, BETWEEN TANK STEP - NOVA
31	1	500289	PLATE, FRMD 3/8 IN - U-BRACKET - S

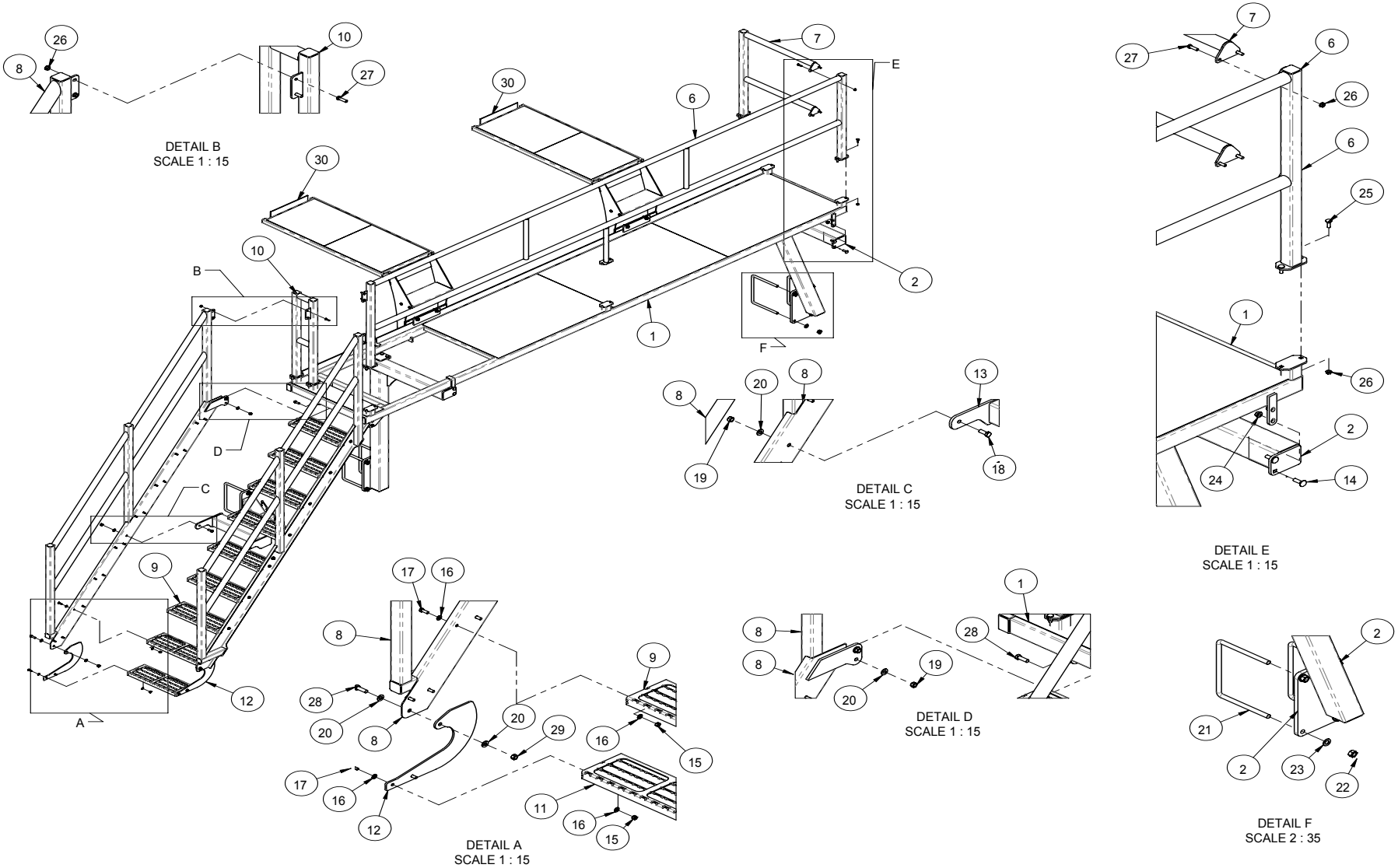
DETAIL B
SCALE 1 : 15
DETAIL C
SCALE 1 : 15
DETAIL E
SCALE 1 : 15
DETAIL A
SCALE 1 : 15
DETAIL D
SCALE 1 : 15
DETAIL F
SCALE 2 : 35

Parts Description:

Long Conveyor - 780/820 Nova

Part Number: 503900-2

ITEM	QTY.	PART NO.	DESCRIPTION
1	1	503910-3	ASSY, MAIN MOUNT - LONG CONVEYOR
2	1	503920-1	ASSY, MAIN ARM MOUNT
3	1	503930	ASSY, SECD ARM - LONG CONVEYOR MNT
4	1	503935	ASSY, PIVOT MOUNT - SMT FILL CON
5	1	503940	ASSY, MOUNT POST - CONVEYOR LATCH - BLK
6	1	501361-1	PLATE, 3/8 IN - BTM BUMPER MNT - CONVEYOR - BLK
7	1	503950-2	ASSY, CONTROL VALVE MOUNT
8	1	501215-2	ASSY, CONVEYOR TILT PIN
9	4	503967	ASSY, PIVOT PIN - GREASED
10	1	501114-6	PLATE, FRMD 1/4 IN - BTM BUMPER HOLDER - CONVEYOR - BLK
11	1	258506	MANIFOLD, HYD - 3 VALVE - CONVEYOR ARM CONTROL
12	1	501178	PAD, WEAR 1/4 IN - UHMW - CONVEYOR PIVOT
13	2	258510	CYL, HYD 3 X 24 IN
14	1	258550	CYL, HYD 2 1/2 X 8 IN
15	5	501225-1	PLATE, FRMD 12 GA - 3/4 IN HYD HOSE CLAMP
16	7	258394	HOSE CLAMP - 2 HALVES - 3/4" HOSE - 428,5 / 28,5 PAH
17	5	258396	HOSE CLAMP - COVER PLATE - GD4DW3
18	13	258398	HOSE CLAMP - 2 HALVES - 1/4" HOSE
19	11	258399	HOSE CLAMP - COVER PLATE - 2D
20	2	250084	BOLT, HEX 5/16 X 2 1/2 UNC GR5 PL
21	7	250099	BOLT, HEX 5/16 X 1 3/4 UNC GR5 PL
22	10	250658	SCREW, SELF THREAD - 1/4 X 1 IN
23	5	250073	BOLT, HEX 5/16 X 2 UNC GR5 PL
24	4	250128	BOLT, HEX 5/16 X 3 IN UNC GR5 PL
25	4	250601	BUSH, 1 1/2OD X 1 1/4ID X 7/8 IN - CONNEX
26	2	400234-1	WASHER, TRIP 1/4 IN - UHMW
27	4	250050	BOLT, HEX 1/2 X 3 1/2 IN UNC GR5 PL
28	4	250504	NUT, LOCK - 1/2 UNC - STOVER - PL
29	14	250555	WASHER, FLAT - 1/2 IN - GR8 - PL
30	13	250450	NUT, HEX 1/2 UNC GR5 PL
31	8	250232	BOLT, U-SQ - 3/4 UNC X 12 ID X 10 IN - 2 IN THD - GR8 PL
32	18	250552	WASHER, FLAT 3/4IN GR8 PL
33	18	250451	NUT, HEX 3/4 UNC GR5 PL
34	7	250001	BOLT, HEX 1/2 X 1 1/2 IN GR5 PL
35	1	250048	BOLT, HEX 1/2 X 2 IN GR5 PL
36	2	250019	BOLT, HEX 3/8 X 1 1/4 IN GR5 PL
37	17	250557	WASHER, FLAT - 3/8 IN GR8 PL
38	8	250453	NUT, HEX - 3/8 UNC PL
39	1	250013	BOLT, HEX 1/2 X 1 1/4 IN GR5 PL
40	1	250039	BOLT, HEX 3/8 X 2 IN GR5 PL
41	1	250503	NUT, LOCK - 3/8 UNC - STOVER - PL
42	2	250234	BOLT, U-SQ - 1/2 UNC X 12 ID X 10 IN - 2IN THD - GR8 PL
43	2	250047	BOLT, HEX 5/8 X 2 UNC GR5 PL
44	2	250550	WASHER, FLAT 5/8 IN GR8 PL
45	2	250455	NUT, HEX 5/8 UNC GR5 PL
46	4	250093	BOLT, HEX 3/8 X 1 3/4 IN GR5 PL
47	2	250628	BUSH, SLEEVE - PLASTIC - 3ID X 3 3/16OD X 2 IN
48	1	250621	PIN, COILED SPRING - 1/4 X 3 1/2 IN - PL
49	2	250633	SCREW, MACHINE 10-32 X 1 IN - PLATED
50	2	250634	NUT, MACHINE 10-32 - PLATED
51	1	503960	ASSY, LOCK CLAMP - CONVEYOR LATCH
52	2	258551	CYL, HYD 2 X 4 IN - FILL AUGER
53	2	250689	BUSH, 1 IN O.D. 3/4 IN I.D. - IGUS - JSI-1216-16
54	1	503970-1	ASSY, MAIN LATCH CLAMP - CONVEYOR - BLK
55	1	503980-1	ASSY, MAIN LATCH HOOK - LONG CONVEYOR - YEL
56	1	259853	BUMPER, 3/4 IN UHMW - BOTTOM - CONVEYOR
57	1	259854	BUMPER, 3/4 IN UHMW - SIDE - CONVEYOR
58	1	501224	PLATE, FRMD 1/4 IN - BUMPER GUIDE - CONVEYOR - BLK
59	1	250101	BOLT, CARRIAGE - 3/8 X 1 1/4 IN UNC GR5 PL
60	1	258509	VALVE, CONVEYOR BELT ON/OFF CONTROL - DELTA SJ-S2B-00-HC-12-S
61	1	501238	PLATE, BOLT 1/4 IN - ROAD TRANSPORT MNT - BLK
62	1	501239	PLATE, FRMD 1/4 IN - ROAD TRANSPORT LOCK - BLK
63	2	250036	BOLT, HEX 3/8 X 1 IN GR5 PL
64	4	250558	WASHER, FLAT - 5/16 IN - GR8 PL
65	2	250460	NUT, HEX - 5/16 UNC PL
66	2	250004	BOLT, HEX 3/4 X 2 3/4 UNC GR5 PL
67	1	280010	KAR-TECH REMOTE SYSTEM, 10 BUTTON
68	1	529800	CONVEYOR, CONVEYALL - TCP1628
69	1	503964	UHMW, STOPPER PAD

NOTE:
LOCK PLATES ARE ONLY FOR ROAD TRANSPORTATION BY TRUCK/SEMI. PLATES CAN BE PERMANENTLY REMOVED ONCE THE NOVA IS CONNECTED TO A DRILL AND TRACTOR.

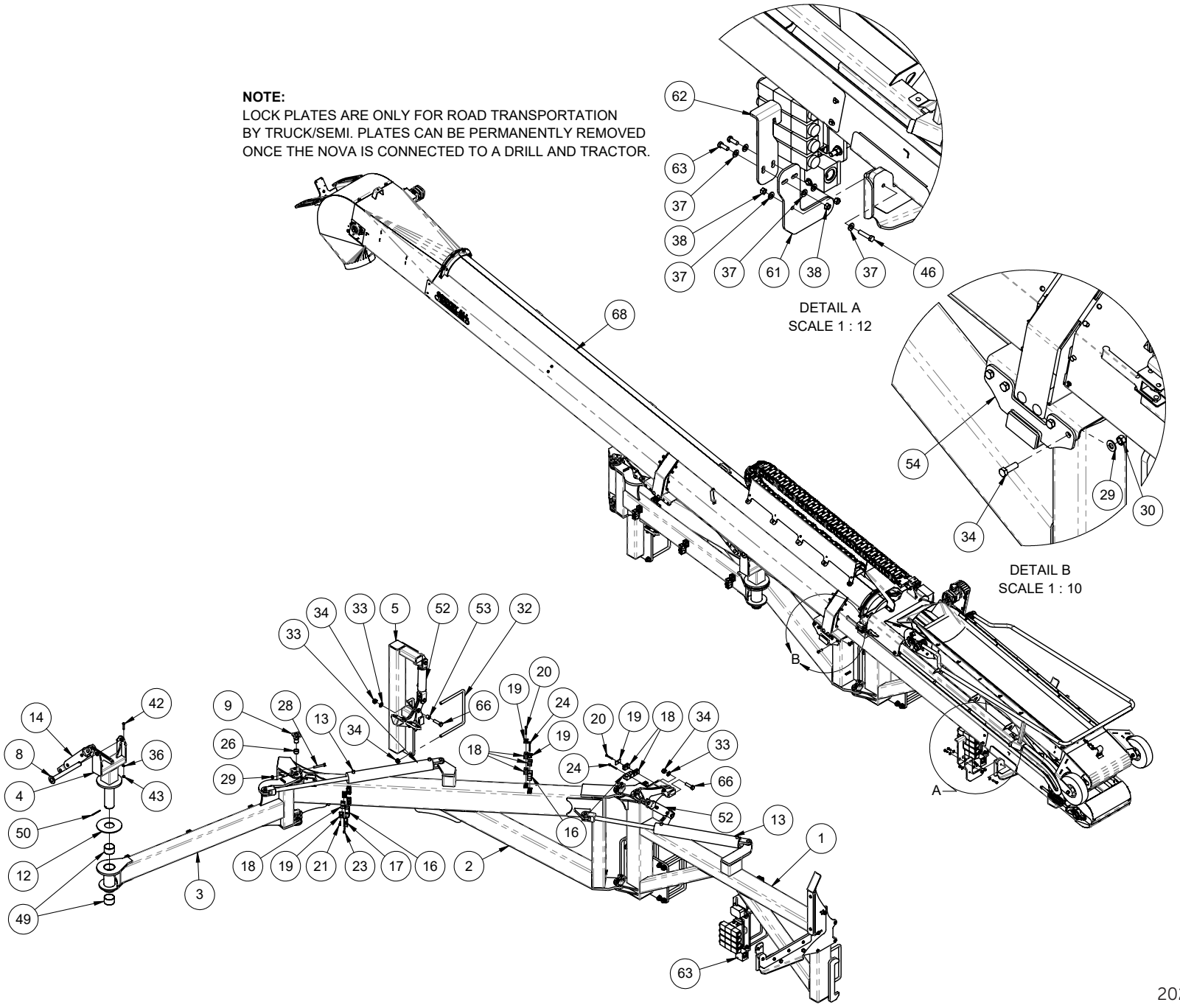

Parts Description:

Long Conveyor - 780/820 Nova Main Mount

Part Number: 503900-2

ITEM	QTY.	PART NO.	DESCRIPTION
1	1	503920-1	ASSY, MAIN ARM MOUNT
2	1	503930	ASSY, SECD ARM - LONG CONVEYOR MNT
3	1	503935	ASSY, PIVOT MOUNT - SMT FILL CON
4	1	503940	ASSY, MOUNT POST - CONVEYOR LATCH - BLK
5	1	501215-2	ASSY, CONVEYOR TILT PIN
6	4	503967	ASSY, PIVOT PIN - GREASED
7	1	258506	MANIFOLD, HYD - 3 VALVE - CONVEYOR ARM CONTROL
8	1	501178	PAD, WEAR 1/4 IN - UHMW - CONVEYOR PIVOT
9	2	258510	CYL, HYD 3 X 24 IN
10	1	258550	CYL, HYD 2 1/2 X 8 IN
11	7	258394	HOSE CLAMP - 2 HALVES - 3/4" HOSE - 428,5 / 28,5 PAH
12	5	258396	HOSE CLAMP - COVER PLATE - GD4DW3
13	13	258398	HOSE CLAMP - 2 HALVES - 1/4" HOSE
14	11	258399	HOSE CLAMP - COVER PLATE - 2D
15	2	250084	BOLT, HEX 5/16 X 2 1/2 UNC GR5 PL
16	7	250099	BOLT, HEX 5/16 X 1 3/4 UNC GR5 PL
17	5	250073	BOLT, HEX 5/16 X 2 UNC GR5 PL
18	3	250128	BOLT, HEX 5/16 X 3 IN UNC GR5 PL
19	4	250601	BUSH, 1 1/2OD X 1 1/4ID X 7/8 IN - CONNEX
20	2	400234-1	WASHER, TRIP 1/4 IN - UHMW
21	4	250050	BOLT, HEX 1/2 X 3 1/2 IN UNC GR5 PL
22	4	250504	NUT, LOCK - 1/2 UNC - STOVER - PL
23	10	250555	WASHER, FLAT - 1/2 IN - GR8 - PL
24	9	250450	NUT, HEX 1/2 UNC GR5 PL
25	18	250552	WASHER, FLAT 3/4IN GR8 PL
26	18	250451	NUT, HEX 3/4 UNC GR5 PL
27	3	250001	BOLT, HEX 1/2 X 1 1/2 IN GR5 PL
28	1	250048	BOLT, HEX 1/2 X 2 IN GR5 PL
29	2	250019	BOLT, HEX 3/8 X 1 1/4 IN GR5 PL
30	15	250557	WASHER, FLAT - 3/8 IN GR8 PL
31	7	250453	NUT, HEX - 3/8 UNC PL
32	1	250013	BOLT, HEX 1/2 X 1 1/4 IN GR5 PL
33	1	250039	BOLT, HEX 3/8 X 2 IN GR5 PL
34	1	250503	NUT, LOCK - 3/8 UNC - STOVER - PL
35	2	250234	BOLT, U-SQ - 1/2 UNC X 12 ID X 10 IN - 2IN THD - GR8 PL
36	2	250047	BOLT, HEX 5/8 X 2 UNC GR5 PL
37	2	250550	WASHER, FLAT 5/8 IN GR8 PL
38	2	250455	NUT, HEX 5/8 UNC GR5 PL
39	4	250093	BOLT, HEX 3/8 X 1 3/4 IN GR5 PL
40	2	250628	BUSH, SLEEVE - PLASTIC - 3ID X 3 3/16OD X 2 IN
41	1	250621	PIN, COILED SPRING - 1/4 X 3 1/2 IN - PL
42	2	250633	SCREW, MACHINE 10-32 X 1 IN - PLATED
43	2	250634	NUT, MACHINE 10-32 - PLATED
44	2	250232	BOLT, U-SQ - 3/4 UNC X 12 ID X 10 IN - 2 IN THD - GR8 PL
45	1	503960	ASSY, LOCK CLAMP - CONVEYOR LATCH
46	2	258551	CYL, HYD 2 X 4 IN - FILL AUGER
47	2	250689	BUSH, 1 IN O.D. 3/4 IN I.D. - IGUS - JSI-1216-16
48	1	503980-1	ASSY, MAIN LATCH HOOK - LONG CONVEYOR - YEL
49	1	259853	BUMPER, 3/4 IN UHMW - BOTTOM - CONVEYOR
50	1	259854	BUMPER, 3/4 IN UHMW - SIDE - CONVEYOR
51	1	501224	PLATE, FRMD 1/4 IN - BUMPER GUIDE - CONVEYOR - BLK
52	1	250101	BOLT, CARRIAGE - 3/8 X 1 1/4 IN UNC GR5 PL
53	1	258509	VALVE, CONVEYOR BELT ON/OFF CONTROL - DELTA SJ-S2B-00-HC-12-S
54	1	501238	PLATE, BOLT 1/4 IN - ROAD TRANSPORT MNT - BLK
55	1	250036	BOLT, HEX 3/8 X 1 IN GR5 PL
56	2	250558	WASHER, FLAT - 5/16 IN - GR8 PL
57	1	250460	NUT, HEX - 5/16 UNC PL
58	2	250004	BOLT, HEX 3/4 X 2 3/4 UNC GR5 PL
59	1	280010	KAR-TECH REMOTE SYSTEM, 10 BUTTON
60	1	503910-3	ASSY, MAIN MOUNT - LONG CONVEYOR
61	1	501361-1	PLATE, 3/8 IN - BTM BUMPER MNT - CONVEYOR - BLK
62	1	503950-2	ASSY, CONTROL VALVE MOUNT
63	1	501114-6	PLATE, FRMD 1/4 IN - BTM BUMPER HOLDER - CONVEYOR - BLK
64	1	503964	UHMW, STOPPER PAD

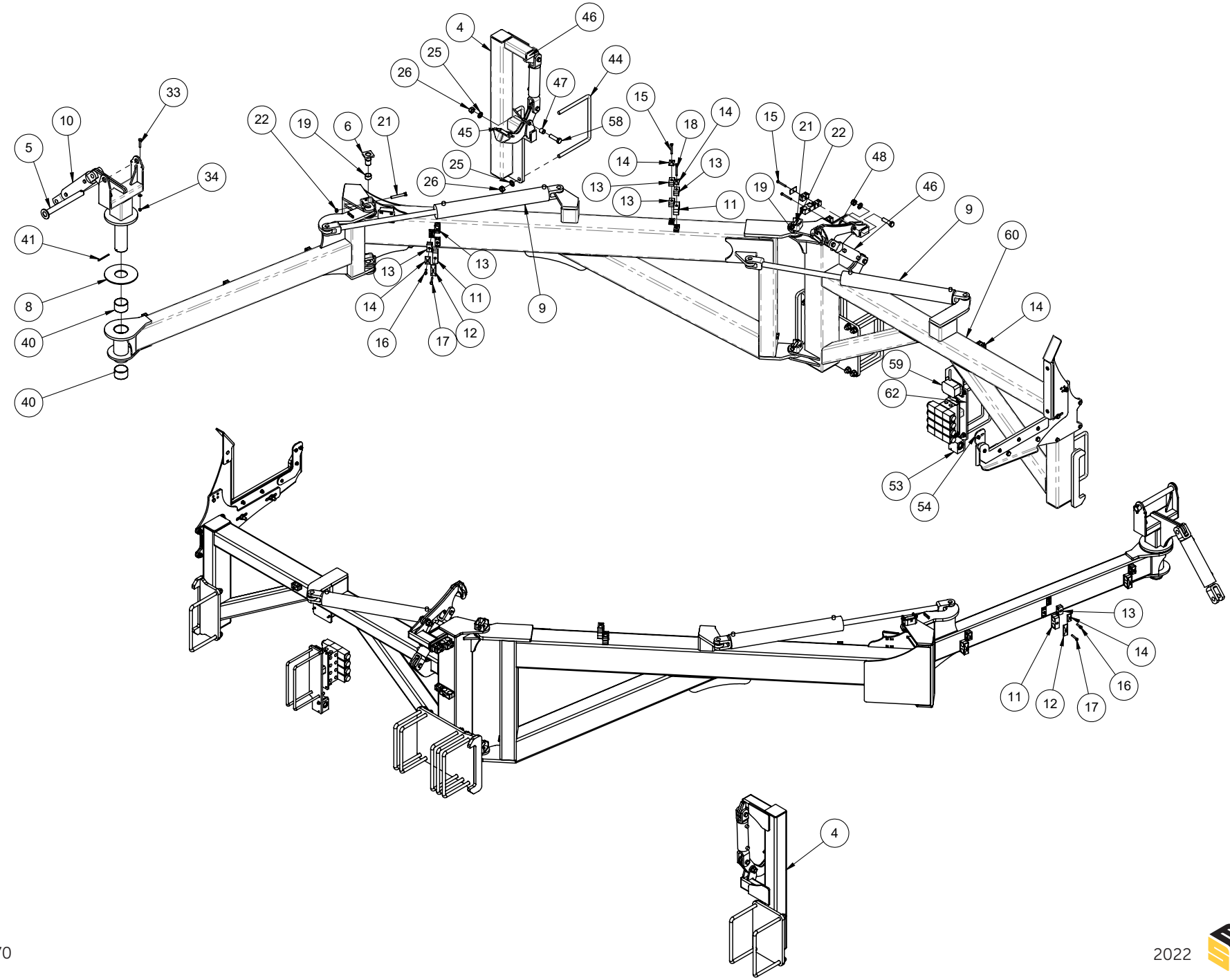
4
46
25
26
44
47
33
10
5
22
19
6
21
45
58
15
18
14
15
21
22
34
25
26
14
13
48
13
13
11
19
46
9
41
13
13
60
8
14
11
9
14
40
16
17
12
59
62
40
53
54
13
14
11
12
17
16
4

Parts Description:

Long Conveyor - 780/820 Nova Main Mount Cont'd

Part Number: 503900-2

ITEM	QTY.	PART NO.	DESCRIPTION
1	1	503910-3	ASSY, MAIN MOUNT - LONG CONVEYOR
2	1	501361-1	PLATE, 3/8 IN - BTM BUMPER MNT - CONVEYOR - BLK
3	1	503950-2	ASSY, CONTROL VALVE MOUNT
4	2	503967	ASSY, PIVOT PIN - GREASED
5	1	501114-6	PLATE, FRMD 1/4 IN - BTM BUMPER HOLDER - CONVEYOR - BLK
6	1	258506	MANIFOLD, HYD - 3 VALVE - CONVEYOR ARM CONTROL
7	2	258394	HOSE CLAMP - 2 HALVES - 3/4" HOSE - 428,5 / 28,5 PAH
8	1	258396	HOSE CLAMP - COVER PLATE - GD4DW3
9	5	258398	HOSE CLAMP - 2 HALVES - 1/4" HOSE
10	4	258399	HOSE CLAMP - COVER PLATE - 2D
11	1	250084	BOLT, HEX 5/16 X 2 1/2 UNC GR5 PL
12	2	250099	BOLT, HEX 5/16 X 1 3/4 UNC GR5 PL
13	1	250073	BOLT, HEX 5/16 X 2 UNC GR5 PL
14	3	250128	BOLT, HEX 5/16 X 3 IN UNC GR5 PL
15	2	250601	BUSH, 1 1/2OD X 1 1/4ID X 7/8 IN - CONNEX
16	1	400234-1	WASHER, TRIP 1/4 IN - UHMW
17	2	250050	BOLT, HEX 1/2 X 3 1/2 IN UNC GR5 PL
18	2	250504	NUT, LOCK - 1/2 UNC - STOVER - PL
19	11	250555	WASHER, FLAT - 1/2 IN - GR8 - PL
20	10	250450	NUT, HEX 1/2 UNC GR5 PL
21	6	250232	BOLT, U-SQ - 3/4 UNC X 12 ID X 10 IN - 2 IN THD - GR8 PL
22	13	250552	WASHER, FLAT 3/4IN GR8 PL
23	13	250451	NUT, HEX 3/4 UNC GR5 PL
24	3	250001	BOLT, HEX 1/2 X 1 1/2 IN GR5 PL
25	1	250048	BOLT, HEX 1/2 X 2 IN GR5 PL
26	2	250019	BOLT, HEX 3/8 X 1 1/4 IN GR5 PL
27	12	250557	WASHER, FLAT - 3/8 IN GR8 PL
28	6	250453	NUT, HEX - 3/8 UNC PL
29	1	250013	BOLT, HEX 1/2 X 1 1/4 IN GR5 PL
30	2	250234	BOLT, U-SQ - 1/2 UNC X 12 ID X 10 IN - 2IN THD - GR8 PL
31	2	250047	BOLT, HEX 5/8 X 2 UNC GR5 PL
32	2	250550	WASHER, FLAT 5/8 IN GR8 PL
33	2	250455	NUT, HEX 5/8 UNC GR5 PL
34	4	250093	BOLT, HEX 3/8 X 1 3/4 IN GR5 PL
35	2	250633	SCREW, MACHINE 10-32 X 1 IN - PLATED
36	2	250634	NUT, MACHINE 10-32 - PLATED
37	1	250689	BUSH, 1 IN O.D. 3/4 IN I.D. - IGUS - JSI-1216-16
38	1	258551	CYL, HYD 2 X 4 IN - FILL AUGER
39	1	503980-1	ASSY, MAIN LATCH HOOK - LONG CONVEYOR - YEL
40	1	259853	BUMPER, 3/4 IN UHMW - BOTTOM - CONVEYOR
41	1	259854	BUMPER, 3/4 IN UHMW - SIDE - CONVEYOR
42	1	501224	PLATE, FRMD 1/4 IN - BUMPER GUIDE - CONVEYOR - BLK
43	1	250101	BOLT, CARRIAGE - 3/8 X 1 1/4 IN UNC GR5 PL
44	1	258509	VALVE, CONVEYOR BELT ON/OFF CONTROL - DELTA SJ-S2B-00-HC-12-S
45	1	501238	PLATE, BOLT 1/4 IN - ROAD TRANSPORT MNT - BLK
46	1	250036	BOLT, HEX 3/8 X 1 IN GR5 PL
47	4	250558	WASHER, FLAT - 5/16 IN - GR8 PL
48	2	250460	NUT, HEX - 5/16 UNC PL
49	1	250004	BOLT, HEX 3/4 X 2 3/4 UNC GR5 PL
50	1	280010	KAR-TECH REMOTE SYSTEM, 10 BUTTON

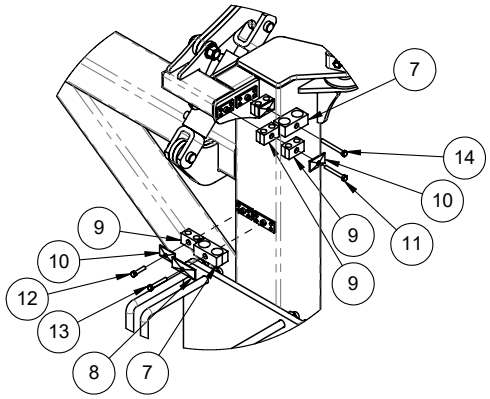

DETAIL J
SCALE 1 : 15

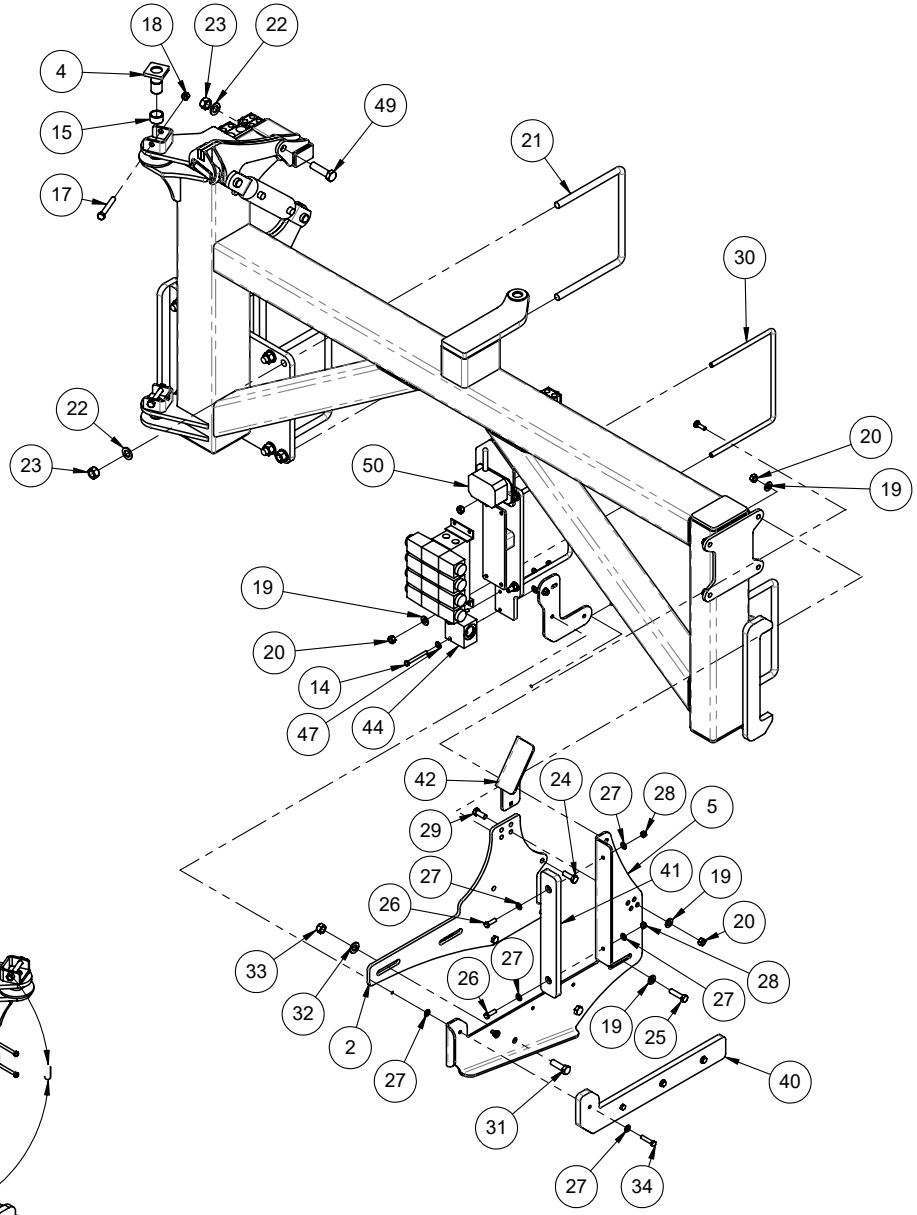

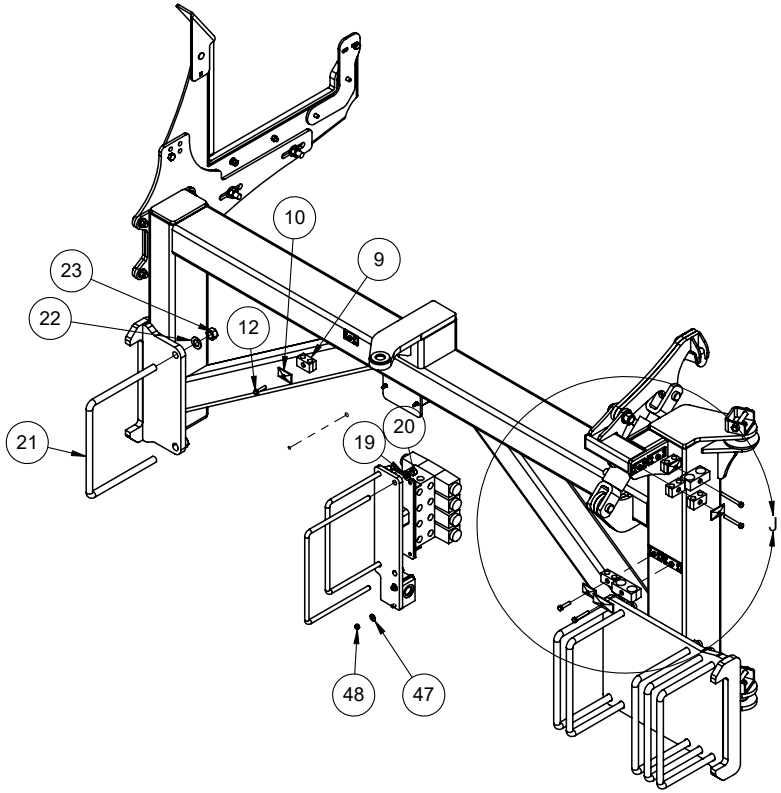

Parts Description:

Long Conveyor
780 / 820 Nova Latch

Part Number: 503900-2

ITEM	QTY.	PART NO.	DESCRIPTION
1	1	503940	ASSY, MOUNT POST - CONVEYOR LATCH - BLK
2	2	250232	BOLT, U-SQ - 3/4 UNC X 12 ID X 10 IN - 2 IN THD - GR8 PL
3	5	250552	WASHER, FLAT 3/4IN GR8 PL
4	5	250451	NUT, HEX 3/4 UNC GR5 PL
5	1	503960	ASSY, LOCK CLAMP - CONVEYOR LATCH
6	1	258551	CYL, HYD 2 X 4 IN - FILL AUGER
7	1	250689	BUSH, 1 IN O.D. 3/4 IN I.D. - IGUS - JSI-1216-16
8	1	250004	BOLT, HEX 3/4 X 2 3/4 UNC GR5 PL
9	2	250557	WASHER, FLAT - 3/8 IN GR8 PL
10	2	250453	NUT, HEX - 3/8 UNC PL
11	1	503964	UHMW, STOPPER PAD
12	2	250019	BOLT, HEX 3/8 X 1 1/4 IN GR5 PL

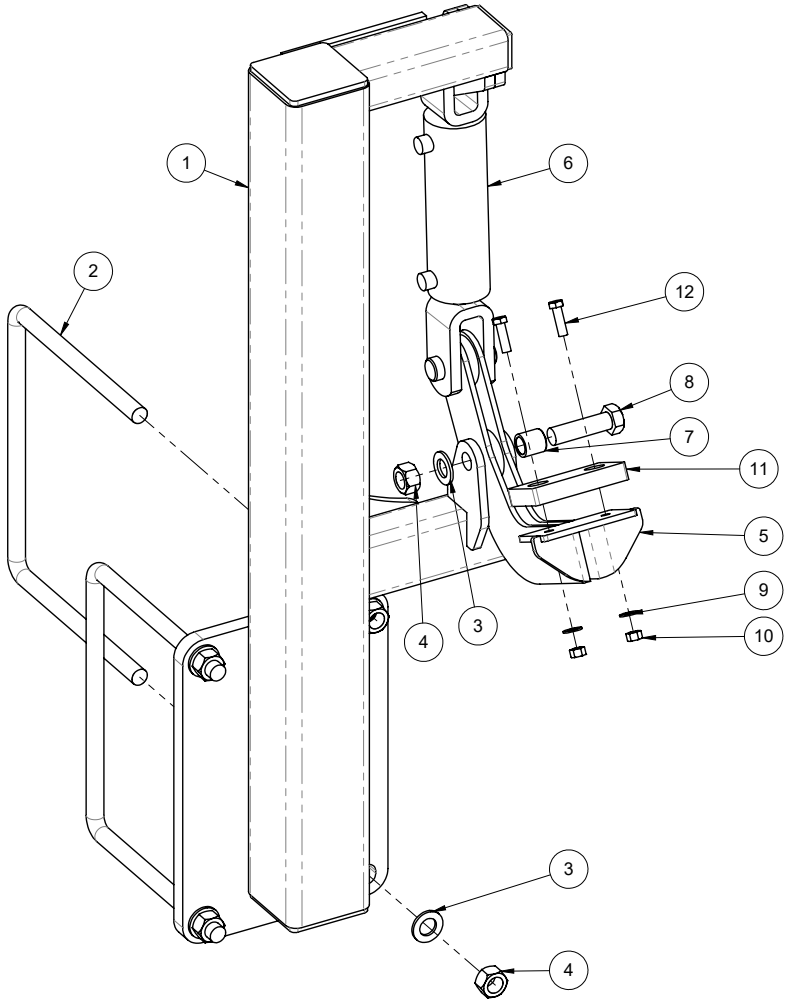

THIS PAGE LEFT INTENTIONALLY BLANK

Parts Description:

Short Conveyor 520/560/630 Nova

Part Number: 502900-2

ITEM	QTY.	PART NO.	DESCRIPTION
1	1	259810	CONVEYOR, CONVEYALL - TCP1625 - BLK
2	1	501710-1	ASSY, MAIN MOUNT - SHORT CONVEYOR - SMART FILL - BLK
3	1	502925-1	ASSY, MAIN ARM - SHORT CONVEYOR MNT - SMART FILL - BLK
4	1	502930	ASSY, SECOND ARM - SHORT CONVEYOR MNT - NOVA - BLK
5	1	502935	ASSY, PIVOT MOUNT - SHORT CONVEYOR - BLK
6	1	502940	ASSY, MOUNT POST - SHORT CONVEYOR LATCH - SMART FILL - BLK
7	1	501361-1	PLATE, 3/8 IN - BTM BUMPER MNT - CONVEYOR - BLK
8	1	501215-2	ASSY, CONVEYOR TILT PIN
9	4	503967	ASSY, PIVOT PIN - GREASED
10	1	501114-6	PLATE, FRMD 1/4 IN - BTM BUMPER HOLDER - CONVEYOR - BLK
11	1	258506	MANIFOLD, HYD - 3 VALVE - CONVEYOR ARM CONTROL
12	1	259854	BUMPER, 3/4 IN UHMW - SIDE - CONVEYOR
13	1	259853	BUMPER, 3/4 IN UHMW - BOTTOM - CONVEYOR
14	1	501178	PAD, WEAR 1/4 IN - UHMW - CONVEYOR PIVOT
15	2	258510	CYL, HYD 3 X 24 IN
16	1	258550	CYL, HYD 2 1/2 X 8 IN
17	5	258394	HOSE CLAMP - 2 HALVES - 3/4" HOSE - 428,5 / 28,5 PAH
18	3	258396	HOSE CLAMP - COVER PLATE - GD4DW3
19	11	258398	HOSE CLAMP - 2 HALVES - 1/4" HOSE
20	9	258399	HOSE CLAMP - COVER PLATE - 2D
21	3	250073	BOLT, HEX 5/16 X 2 UNC GR5 PL
22	5	250099	BOLT, HEX 5/16 X 1 3/4 UNC GR5 PL
23	2	250084	BOLT, HEX 5/16 X 2 1/2 UNC GR5 PL
24	2	250128	BOLT, HEX 5/16 X 3 IN UNC GR5 PL
25	5	501225-1	PLATE, FRMD 12 GA - 3/4 IN HYD HOSE CLAMP
26	10	250658	SCREW, SELF THREAD - 1/4 X 1 IN
27	4	250601	BUSH, 1 1/2OD X 1 1/4ID X 7/8 IN - CONNEX
28	2	400234-1	WASHER, TRIP 1/4 IN - UHMW
29	1	250503	NUT, LOCK - 3/8 UNC - STOVER - PL
30	4	250050	BOLT, HEX 1/2 X 3 1/2 IN UNC GR5 PL
31	4	250504	NUT, LOCK - 1/2 UNC - STOVER - PL
32	1	250039	BOLT, HEX 3/8 X 2 IN GR5 PL
33	19	250557	WASHER, FLAT - 3/8 IN GR8 PL
34	7	250232	BOLT, U-SQ - 3/4 UNC X 12 ID X 10 IN - 2 IN THD - GR8 PL
35	18	250451	NUT, HEX 3/4 UNC GR5 PL
36	18	250552	WASHER, FLAT 3/4IN GR8 PL
37	4	250093	BOLT, HEX 3/8 X 1 3/4 IN GR5 PL
38	10	250453	NUT, HEX - 3/8 UNC PL
39	2	250047	BOLT, HEX 5/8 X 2 UNC GR5 PL
40	2	250550	WASHER, FLAT 5/8 IN GR8 PL
41	2	250455	NUT, HEX 5/8 UNC GR5 PL
42	16	250555	WASHER, FLAT - 1/2 IN - GR8 - PL
43	15	250450	NUT, HEX 1/2 UNC GR5 PL
44	11	250001	BOLT, HEX 1/2 X 1 1/2 IN GR5 PL
45	1	250048	BOLT, HEX 1/2 X 2 IN GR5 PL
46	1	250013	BOLT, HEX 1/2 X 1 1/4 IN GR5 PL
47	2	250019	BOLT, HEX 3/8 X 1 1/4 IN GR5 PL
48	4	250038	BOLT, HEX 5/16 X 1 1/4 IN GR5 PL
49	4	250460	NUT, HEX - 5/16 UNC PL
50	4	250558	WASHER, FLAT - 5/16 IN - GR8 PL
51	1	250621	PIN, COILED SPRING - 1/4 X 3 1/2 IN - PL
52	2	250628	BUSH, SLEEVE - PLASTIC - 3ID X 3 3/16OD X 2 IN
53	1	501239	PLATE, FRMD 1/4 IN - ROAD TRANSPORT LOCK - BLK
54	1	501238	PLATE, BOLT 1/4 IN - ROAD TRANSPORT MNT - BLK
55	2	250036	BOLT, HEX 3/8 X 1 IN GR5 PL
56	1	501224	PLATE, FRMD 1/4 IN - BUMPER GUIDE - CONVEYOR - BLK
57	2	250101	BOLT, CARRIAGE - 3/8 X 1 1/4 IN UNC GR5 PL
58	1	502950	ASSY, MAIN LATCH CLAMP - CONVEYOR - SMART FILL - BLK
59	1	502960	ASSY, MAIN LATCH HOOK - SHORT CONVEYOR - SMART FILL - YEL
60	2	258551	CYL, HYD 2 X 4 IN - FILL AUGER
61	1	503960	ASSY, LOCK CLAMP - CONVEYOR LATCH
62	2	250003	BOLT, HEX 3/4 X 2 1/2 UNC GR5 PL
63	2	250004	BOLT, HEX 3/4 X 2 3/4 UNC GR5 PL
64	1	502962	PLATE, 3/8 IN VALVE MOUNT - BLK
65	1	250208	BOLT, U-SQ - 1/2 UNC X 4 ID X 5 IN - 2 IN THD - GR8 PL
66	1	502596	ASSY, BOLT CONNECTION - SHORT CONVEYOR - SMART FILL - BLK
67	1	280010	KAR-TECH REMOTE SYSTEM, 10 BUTTON
68	2	250633	SCREW, MACHINE 10-32 X 1 IN - PLATED
69	2	250634	NUT, MACHINE 10-32 - PLATED

USE HARDWARE BAG
501701-2, 501702-2, AND 501704

DETAIL B
SCALE 1 : 12

NOTE:
LOCK PLATES ARE ONLY FOR ROAD TRANSPORTATION BY TRUCK/SEMI. PLATES CAN BE PERMANENTLY REMOVED ONCE THE NOVA IS CONNECTED TO A DRILL AND TRACTOR.

DETAIL A
SCALE 1 : 12

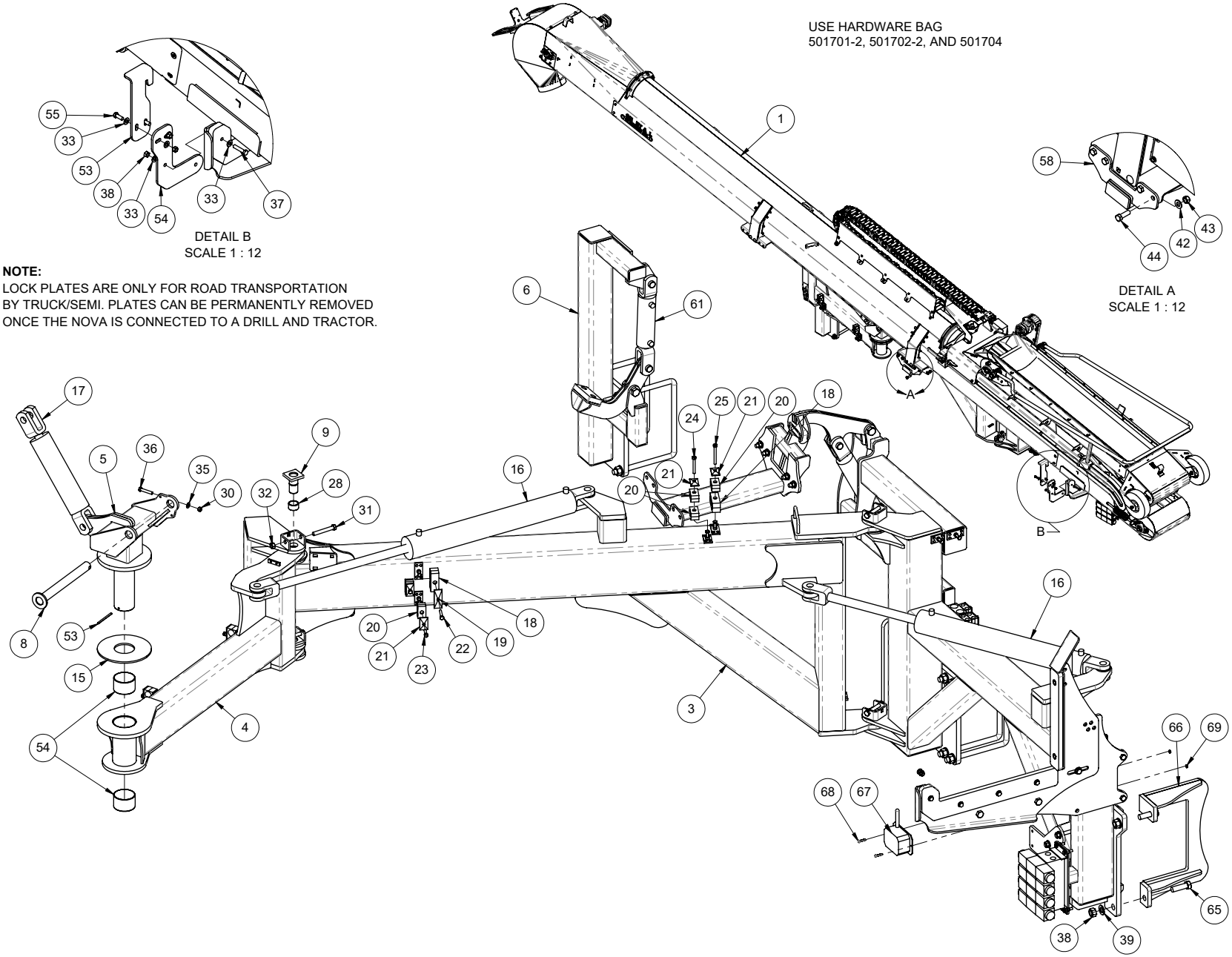

Parts Description:

Short Conveyor 520/560/630 Nova Main Mount

Part Number: 502900-2

ITEM	QTY.	PART NO.	DESCRIPTION
1	1	501710-1	ASSY, MAIN MOUNT - SHORT CONVEYOR - SMART FILL - BLK
2	1	501361-1	PLATE, 3/8 IN - BTM BUMPER MNT - CONVEYOR - BLK
3	2	503967	ASSY, PIVOT PIN - GREASED
4	1	501114-6	PLATE, FRMD 1/4 IN - BTM BUMPER HOLDER - CONVEYOR - BLK
5	1	258506	MANIFOLD, HYD - 3 VALVE - CONVEYOR ARM CONTROL
6	1	259854	BUMPER, 3/4 IN UHMW - SIDE - CONVEYOR
7	1	259853	BUMPER, 3/4 IN UHMW - BOTTOM - CONVEYOR
8	1	258394	HOSE CLAMP - 2 HALVES - 3/4" HOSE - 428,5 / 28,5 PAH
9	3	258398	HOSE CLAMP - 2 HALVES - 1/4" HOSE
10	3	258399	HOSE CLAMP - COVER PLATE - 2D
11	1	250099	BOLT, HEX 5/16 X 1 3/4 UNC GR5 PL
12	1	250084	BOLT, HEX 5/16 X 2 1/2 UNC GR5 PL
13	1	250128	BOLT, HEX 5/16 X 3 IN UNC GR5 PL
14	2	250601	BUSH, 1 1/2OD X 1 1/4ID X 7/8 IN - CONNEX
15	1	400234-1	WASHER, TRIP 1/4 IN - UHMW
16	2	250050	BOLT, HEX 1/2 X 3 1/2 IN UNC GR5 PL
17	2	250504	NUT, LOCK - 1/2 UNC - STOVER - PL
18	14	250557	WASHER, FLAT - 3/8 IN GR8 PL
19	5	250232	BOLT, U-SQ - 3/4 UNC X 12 ID X 10 IN - 2 IN THD - GR8 PL
20	13	250451	NUT, HEX 3/4 UNC GR5 PL
21	13	250552	WASHER, FLAT 3/4IN GR8 PL
22	4	250093	BOLT, HEX 3/8 X 1 3/4 IN GR5 PL
23	8	250453	NUT, HEX - 3/8 UNC PL
24	2	250047	BOLT, HEX 5/8 X 2 UNC GR5 PL
25	2	250550	WASHER, FLAT 5/8 IN GR8 PL
26	2	250455	NUT, HEX 5/8 UNC GR5 PL
27	6	250555	WASHER, FLAT - 1/2 IN - GR8 - PL
28	5	250450	NUT, HEX 1/2 UNC GR5 PL
29	3	250001	BOLT, HEX 1/2 X 1 1/2 IN GR5 PL
30	1	250048	BOLT, HEX 1/2 X 2 IN GR5 PL
31	1	250013	BOLT, HEX 1/2 X 1 1/4 IN GR5 PL
32	2	250019	BOLT, HEX 3/8 X 1 1/4 IN GR5 PL
33	4	250038	BOLT, HEX 5/16 X 1 1/4 IN GR5 PL
34	4	250460	NUT, HEX - 5/16 UNC PL
35	4	250558	WASHER, FLAT - 5/16 IN - GR8 PL
36	1	501224	PLATE, FRMD 1/4 IN - BUMPER GUIDE - CONVEYOR - BLK
37	2	250101	BOLT, CARRIAGE - 3/8 X 1 1/4 IN UNC GR5 PL
38	1	502950	ASSY, MAIN LATCH CLAMP - CONVEYOR - SMART FILL - BLK
39	1	502960	ASSY, MAIN LATCH HOOK - SHORT CONVEYOR - SMART FILL - YEL
40	1	258551	CYL, HYD 2 X 4 IN - FILL AUGER
41	2	250003	BOLT, HEX 3/4 X 2 1/2 UNC GR5 PL
42	1	250004	BOLT, HEX 3/4 X 2 3/4 UNC GR5 PL
43	1	280010	KAR-TECH REMOTE SYSTEM, 10 BUTTON
44	2	250633	SCREW, MACHINE 10-32 X 1 IN - PLATED
45	2	250634	NUT, MACHINE 10-32 - PLATED

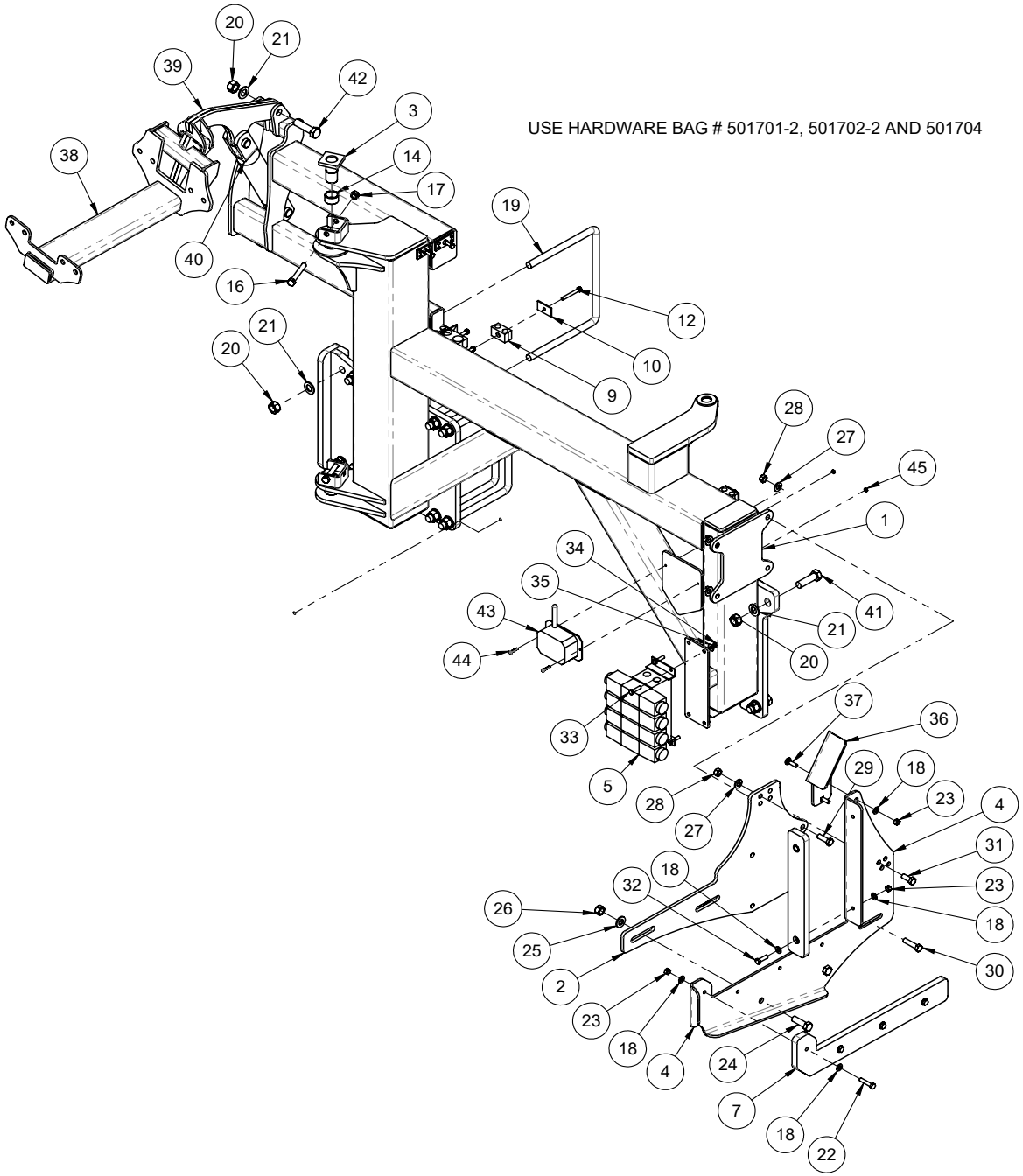
USE HARDWARE BAG # 501701-2, 501702-2 AND 501704
20
21
39
42
3
38
14
17
19
40
16
12
21
20
10
9
28
27
45
1
34
35
41
43
21
44
20
37
36
33
29
18
5
28
23
4
27
31
18
32
23
26
18
25
30
2
23
18
4
24
7
18
22

Parts Description:

Short Conveyor 520/560/630 Nova Latch

Part Number: 502900-2

ITEM	QTY.	PART NO.	DESCRIPTION
1	1	502940	ASSY, MOUNT POST - SHORT CONVEYOR LATCH - SMART FILL - BLK
2	2	250232	BOLT, U-SQ - 3/4 UNC X 12 ID X 10 IN - 2 IN THD - GR8 PL
3	5	250451	NUT, HEX 3/4 UNC GR5 PL
4	5	250552	WASHER, FLAT 3/4IN GR8 PL
5	1	503960	ASSY, LOCK CLAMP - CONVEYOR LATCH
6	1	258551	CYL, HYD 2 X 4 IN - FILL AUGER
7	1	250004	BOLT, HEX 3/4 X 2 3/4 UNC GR5 PL
8	2	250557	WASHER, FLAT - 3/8 IN GR8 PL
9	2	250453	NUT, HEX - 3/8 UNC PL
10	2	250019	BOLT, HEX 3/8 X 1 1/4 IN GR5 PL
11	1	503964	UHMW, STOPPER PAD

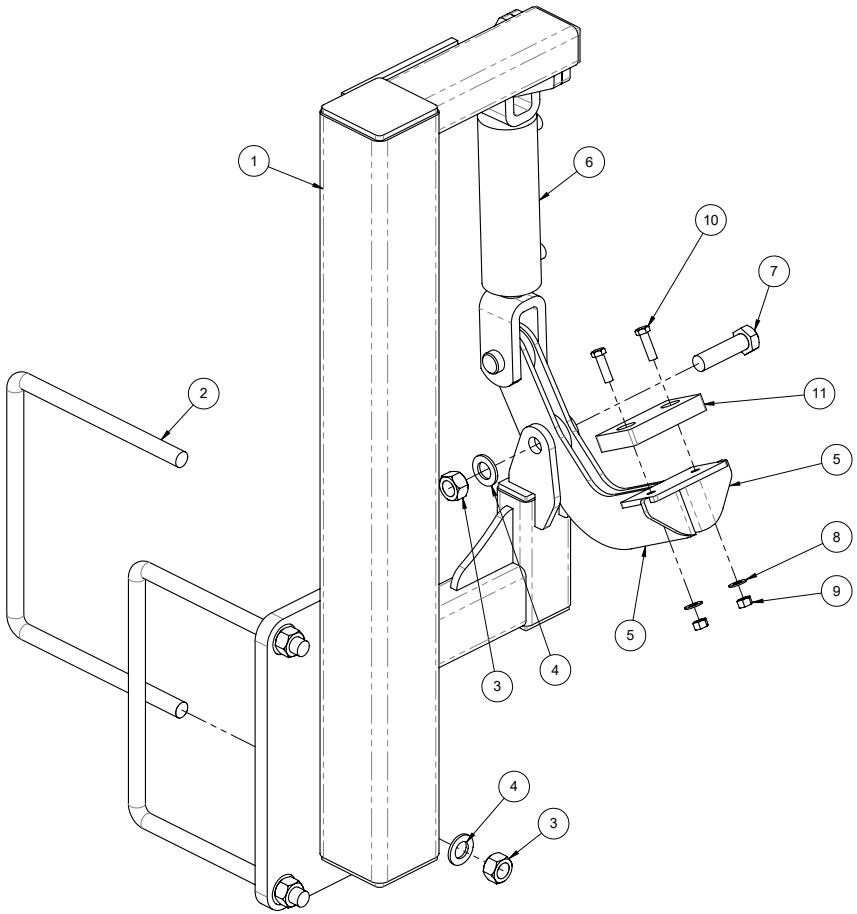

THIS PAGE LEFT INTENTIONALLY BLANK

Parts Description:

Liquid Nova Pump/Valves

Part Number: 501860

ITEM	QTY.	PART NO.	DESCRIPTION
1	1	501865	ASSY, FILL PUMP/VALVE MOUNT-LIQUID NOVA TANK-BLK
2	1	501821	SHEET, FRMD 14 GA - FILL PUMP SHIELD - NOVA
3	1	256226	PUMP, CENTRIFUGAL - HYPRO - 9303S-HM4C
4	2	260042	BANJO, 3" FLANGED TEE
5	1	260043	BANJO, 3" FLANGE X 3" MALE ADAPTER - BALL VALVE
6	4	260030	BANJO, 2" X 2" FP FLANGE BALL VALVE
7	1	260033	BANJO, 2" FP FLANGED "Y" STRAINER-50 MESH
8	2	260026	BANJO, 2"FULL PT.FLANGE X 2"HB90 ELBOW
9	3	260044	BANJO, 3" X 2" FP REDUCER FLANGE
10	2	260046	BANJO, 3" FP FLANGE X 3" MPT
11	1	260200	BANJO, 3IN FILL PUMP - 6 HP HONDA
12	2	260028	BANJO, 2" FP FLANG X 2" HB
13	1	260038	BANJO, 2" FP FLANGE 90D ELBOW
14	1	260031	BANJO, 2" FP FLANGE TEE
15	1	260762	VALVE, PWM - 10 GPM - RAVEN
16	1	260034	BANJO, 2" STD PT FLANGE X 1 1/2" MALE THREAD
17	1	260023	BANJO, 2" STD PT FLANGE X 1 1/4" MALE THREAD
18	1	260000	BANJO, 2" STD PT FLANGE X 1-1/2" HB90 ELBOW
19	1	260050	BANJO, 2" STD FLANGE COUPLING - M200CPG
20	1	260035	BANJO, 2"STD.PT.FLANGE X 2"HB90 ELBOW
21	1	501862	PLATE, CLAMP - 1/4 IN - LIQUID PLUMBING - BLK
22	1	260045	BANJO, 3" CAP
23	2	250071	BOLT, HEX 3/8 X 1 1/2 IN GR5 PL
24	8	250557	WASHER, FLAT - 3/8 IN GR8 PL
25	8	250453	NUT, HEX - 3/8 UNC PL
26	2	250571	BOLT, HEX 1/4 X 2 1/2 IN GR5 PL
27	5	250559	WASHER, FLAT - 1/4 IN - PL
28	5	250458	NUT, HEX - 1/4 UNC PL
29	3	250573	BOLT, HEX 1/4 X 2 1/2 IN GR5 PL
30	2	250234	BOLT, U-SQ - 1/2 UNC X 12 ID X 8 IN - 2 IN THD - GR5 PL
31	4	250555	WASHER, FLAT - 1/2 IN - GR8 - PL
32	4	250450	NUT, HEX 1/2 UNC GR5 PL
33	4	250040	BOLT, HEX 3/8 X 2IN GR5 PL
34	2	250036	BOLT, HEX 3/8 X 1 IN GR5 PL

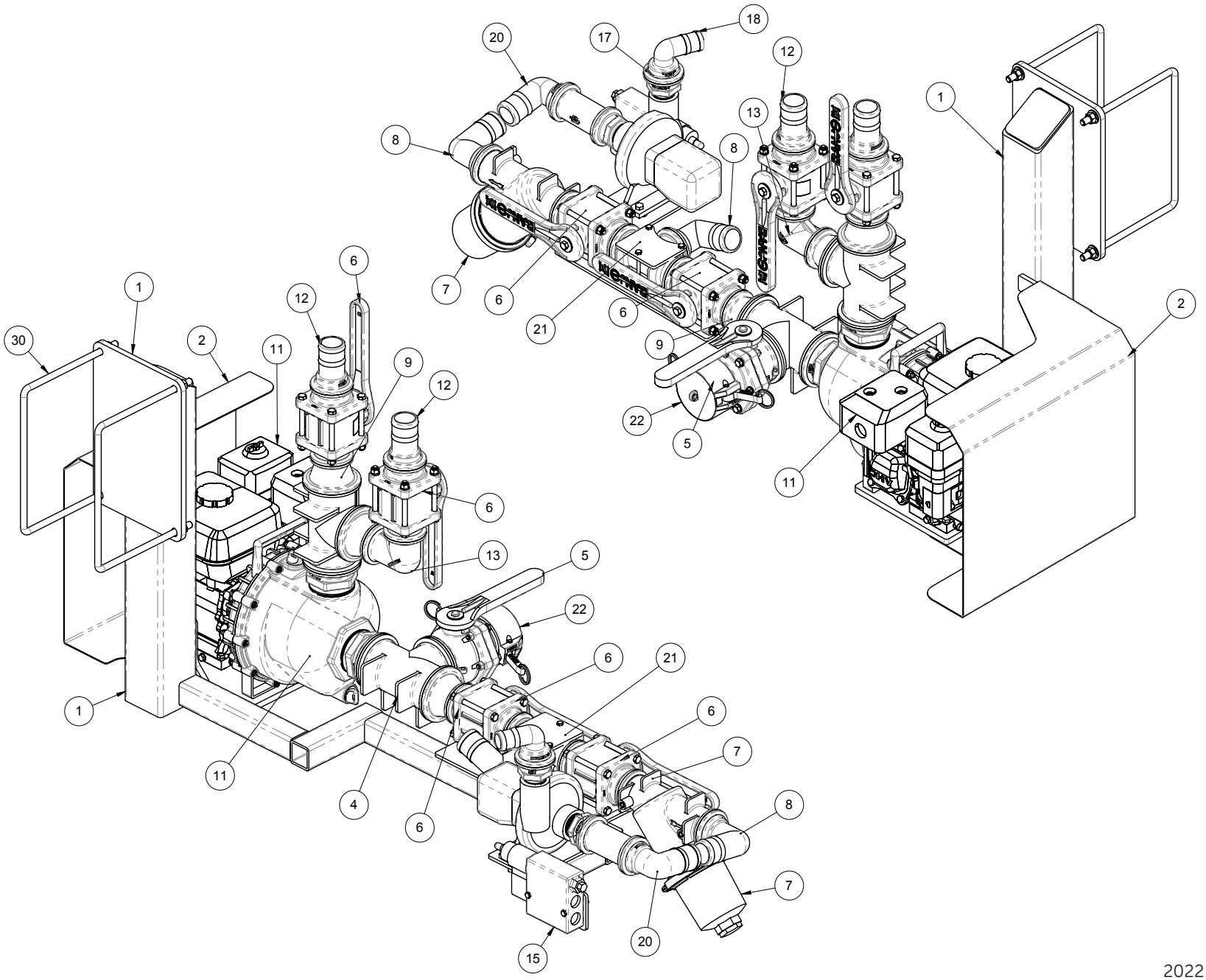
30
1
2
11
12
6
9
12
6
13
5
22
6
21
1
11
4
6
6
7
8
7
20
15
18
17
20
12
13
1
8
8
7
6
21
6
9
22
5
11
2

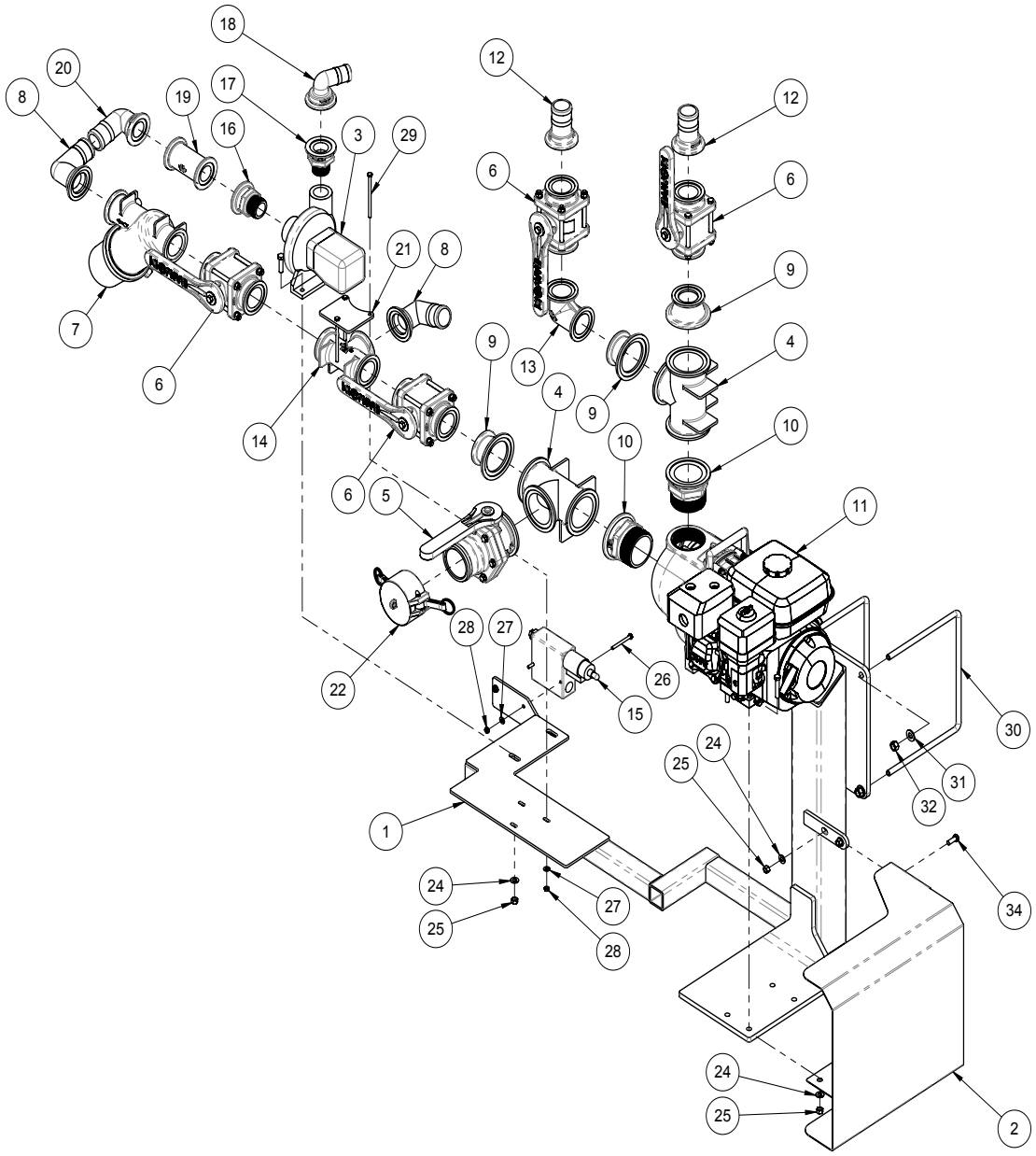
18
20
8
19
17
16
3
29
12
12
6
6
21
8
9
7
13
4
6
9
4
14
10
10
6
5
11
28
27
26
22
15
30
24
25
31
32
1
24
27
34
25
28
24
25
2

Parts Description:

Plumbing Schematic for Liquid Fertilizer

Part Number: 501850-1

ITEM	QTY.	PART NO.	DESCRIPTION
1	24	256506	HOSE - 1 1/2 IN - SPIRAL - LIQUID FERTILIZER
2	48	256507	HOSE - 2 IN - LIQUID FERTILIZER
3	3	260026	BANJO, 2"FULL PT.FLANGE X 2"HB90 ELBOW
4	3	260021	BANJO, 2"FP FLANGE BOLTED BOT. TANK FITTING
5	1	260030	BANJO, 2" X 2" FP FLANGE BALL VALVE
6	1	260025	BANJO, 1 1/2" MALE ADAPTOR X 11/2" HB
	2	256599	CLAMP, TEE BOLT - S/S - 1 1/2 IN HOSE - TC181
	6	256601	CLAMP, TEE BOLT - S/S - 2 IN HOSE - TC218
	6	260012	BANJO, 220 SERIES WORM SCREW CLAMP
	6	260013	BANJO, 220 SERIES EPDM GASKET

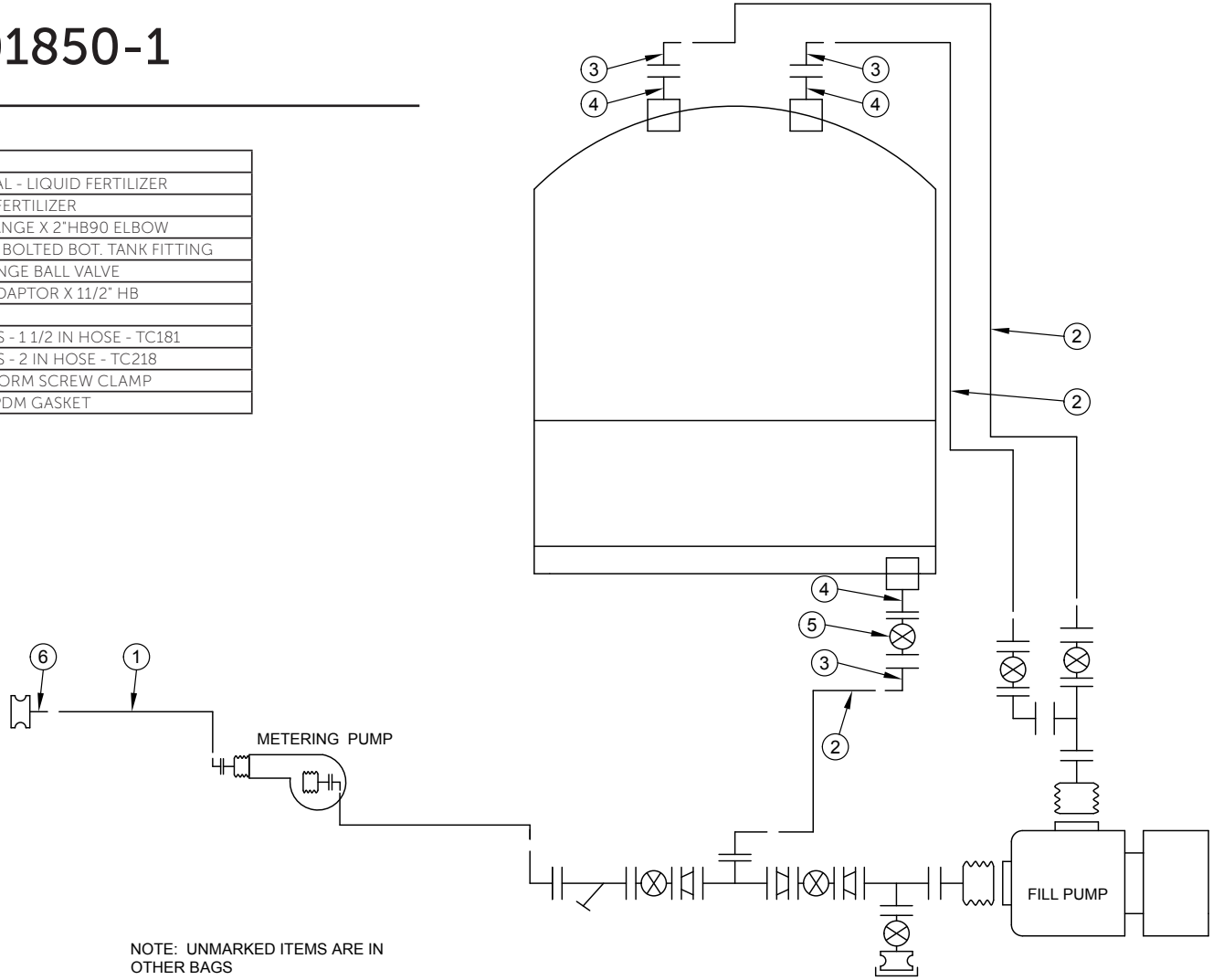

NOTE: UNMARKED ITEMS ARE IN OTHER BAGS

Parts Description:

Top Up Air Schematic - 520 Nova Dual Shoot

Part Number: 500946

ITEM	QTY.	PART NO.	DESCRIPTION
1	2	260123	BANJO, COUPLER - CAP - 1 1/2"
2	2	260122	BANJO, COUPLER - 90D - FEMALE ADAPTER - 1 1/2" HB
3	4	260121	BANJO, COUPLER - MALE ADAPTER - 1 1/2" MPT
4	2	260120	BANJO, NIPPLE - 1 1/2 MPT - SHORT
5	2	260119	BANJO, TEE - 1 1/2 FPT X 1 1/2 FPT X 1 1/2 FPT
6	2	260118	BANJO, BULKHEAD - 1 1/2" - POLY
7	4	260104	BANJO, 1 1/2" MALE THD. X 1 1/2" HB 90
8	2	260101	BANJO, 1 1/2" POLY PIPE ELBOW 90
9	50	256506	HOSE - 1 1/2 IN - SPIRAL - LIQUID FERTILIZER
10	8	256614	CLAMP, GEAR - S/S - 1 1/2 IN - HAS24

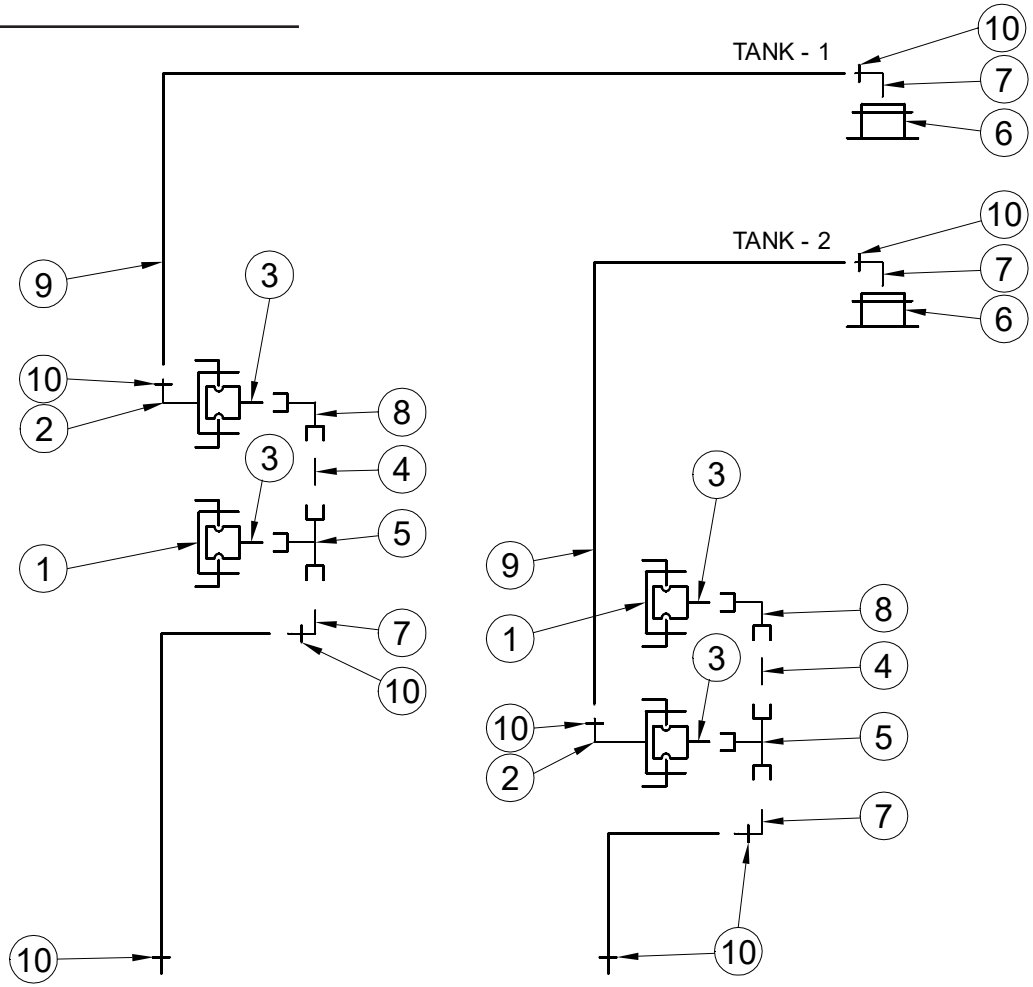

Parts Description:

Top Up Air Schematic - 520 Nova Single Shoot

Part Number: 500947

ITEM	QTY.	PART NO.	DESCRIPTION
1	6	256614	CLAMP, GEAR - S/S - 1 1/2 IN - HAS24
2	30	256506	HOSE - 1 1/2 IN - SPIRAL - LIQUID FERTILIZER
3	1	260101	BANJO, 1 1/2" POLY PIPE ELBOW 90
4	1	260120	BANJO, NIPPLE - 1 1/2 MPT - SHORT
5	1	260119	BANJO, TEE - 1 1/2 FPT X 1 1/2 FPT X 1 1/2 FPT
6	2	260118	BANJO, BULKHEAD - 1 1/2" - POLY
7	5	260104	BANJO, 1 1/2" MALE THD. X 1 1/2" HB 90

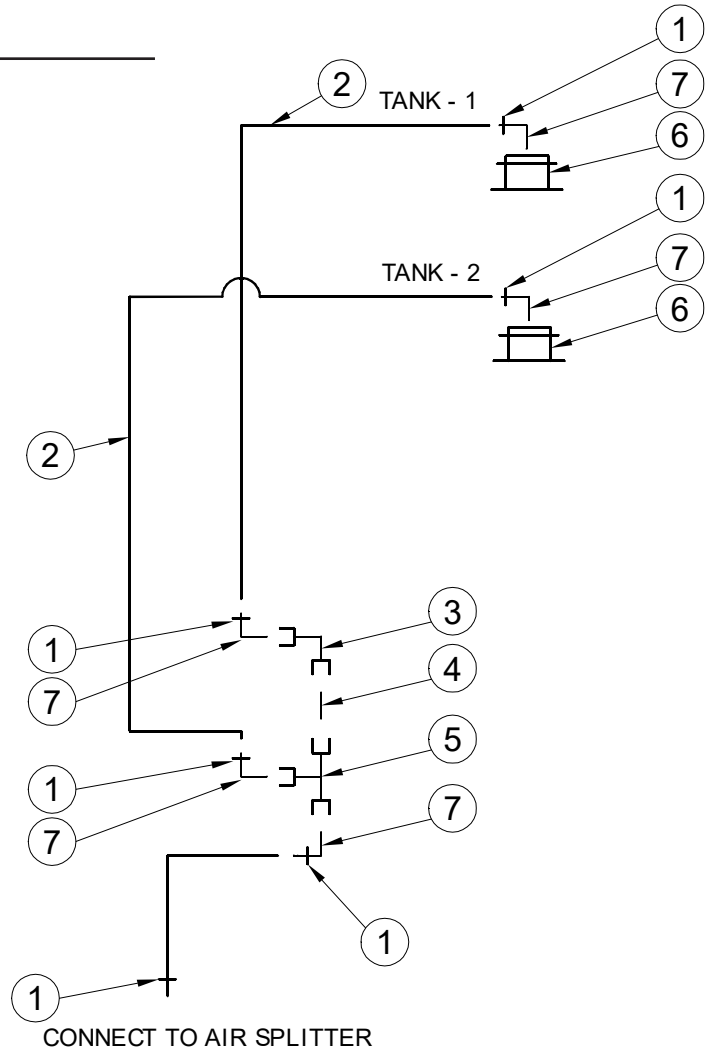

Parts Description:

Top Up Air Schematic - 560 Nova Dual Shoot

Part Number: 500948-1

ITEM	QTY.	PART NO.	DESCRIPTION
1	3	260123	BANJO, COUPLER - CAP - 1 1/2"
2	3	260122	BANJO, COUPLER - 90D - FEMALE ADAPTER - 1 1/2" HB
3	6	260121	BANJO, COUPLER - MALE ADAPTER - 1 1/2" MPT
4	4	260120	BANJO, NIPPLE - 1 1/2 MPT - SHORT
5	4	260119	BANJO, TEE - 1 1/2 FPT X 1 1/2 FPT X 1 1/2 FPT
6	2	260118	BANJO, BULKHEAD - 1 1/2" - POLY
7	4	260104	BANJO, 1 1/2" MALE THD. X 1 1/2" HB 90
8	2	260101	BANJO, 1 1/2" POLY PIPE ELBOW 90
9	60	256506	HOSE - 1 1/2 IN - SPIRAL - LIQUID FERTILIZER
10	10	256614	CLAMP, GEAR - S/S - 1 1/2 IN - HAS24

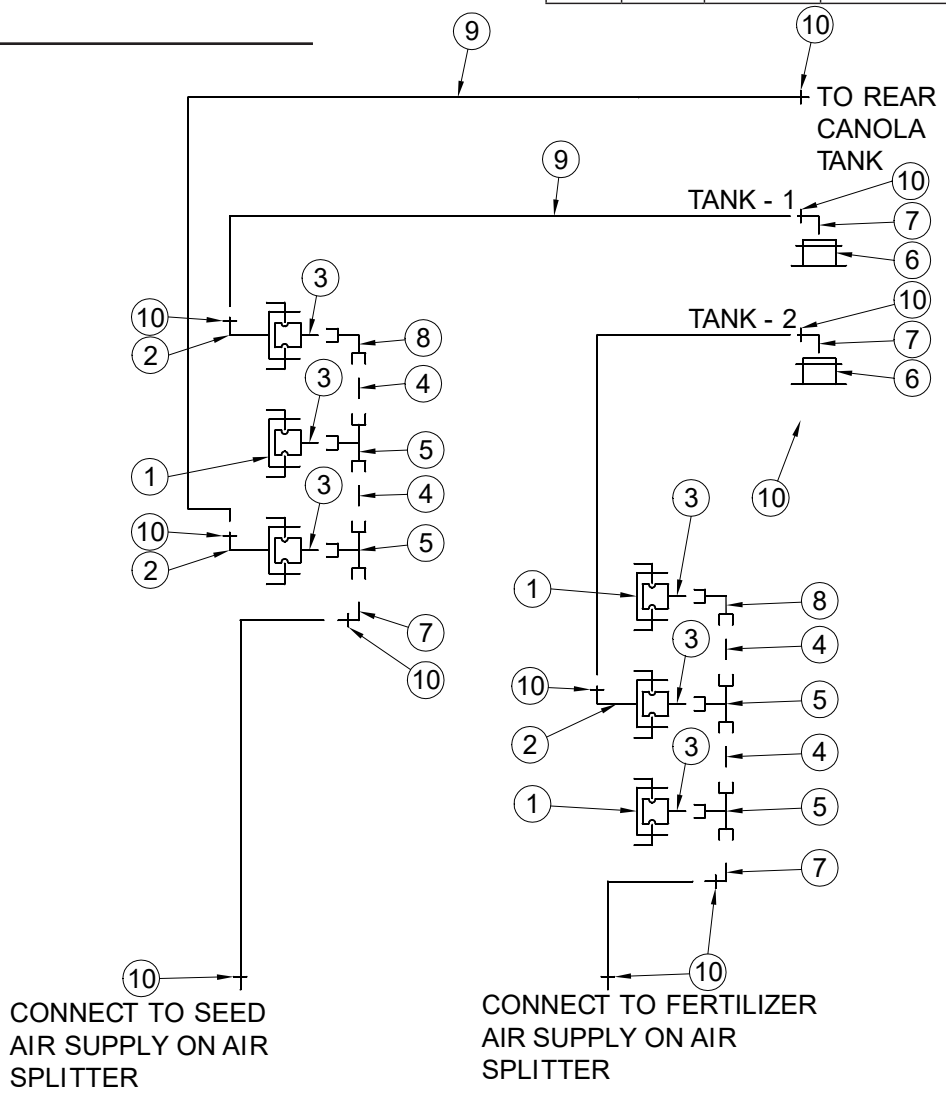

Parts Description:

Top Up Air Schematic - 560 Nova Single Shoot

Part Number: 500948-1

ITEM	QTY.	PART NO.	DESCRIPTION
1	8	256614	CLAMP, GEAR - S/S - 1 1/2 IN - HAS24
2	35	256506	HOSE - 1 1/2 IN - SPIRAL - LIQUID FERTILIZER
3	1	260101	BANJO, 1 1/2" POLY PIPE ELBOW 90
4	2	260120	BANJO, NIPPLE - 1 1/2 MPT - SHORT
5	2	260119	BANJO, TEE - 1 1/2 FPT X 1 1/2 FPT X 1 1/2 FPT
6	2	260118	BANJO, BULKHEAD - 1 1/2" - POLY
7	6	260104	BANJO, 1 1/2" MALE THD. X 1 1/2" HB 90

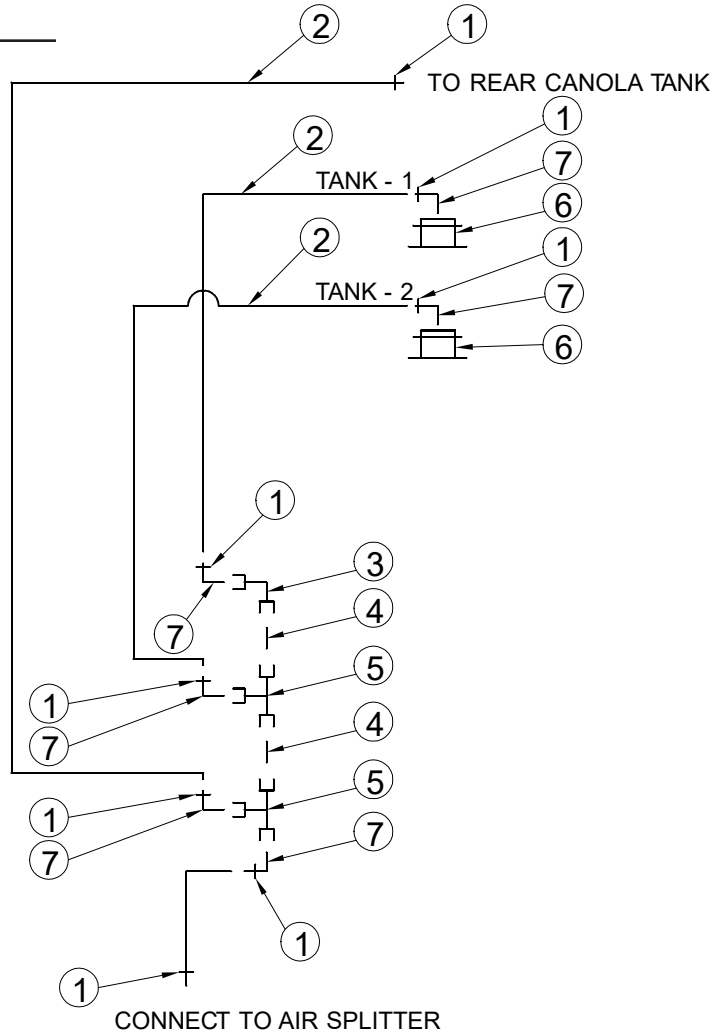

Parts Description:

Top Up Air Schematic - 780 Nova Dual Shoot

Part Number: 500940

ITEM	QTY.	PART NO.	DESCRIPTION
1	3	260123	BANJO, COUPLER - CAP - 1 1/2"
2	3	260122	BANJO, COUPLER - 90D - FEMALE ADAPTER - 1 1/2" HB
3	6	260121	BANJO, COUPLER - MALE ADAPTER - 1 1/2" MPT
4	4	260120	BANJO, NIPPLE - 1 1/2 MPT - SHORT
5	4	260119	BANJO, TEE - 1 1/2 FPT X 1 1/2 FPT X 1 1/2 FPT
6	3	260118	BANJO, BULKHEAD - 1 1/2" - POLY
7	5	260104	BANJO, 1 1/2" MALE THD. X 1 1/2" HB 90
8	2	260101	BANJO, 1 1/2" POLY PIPE ELBOW 90
9	100	256506	HOSE - 1 1/2 IN - SPIRAL - LIQUID FERTILIZER
10	10	256614	CLAMP, GEAR - S/S - 1 1/2 IN - HAS24

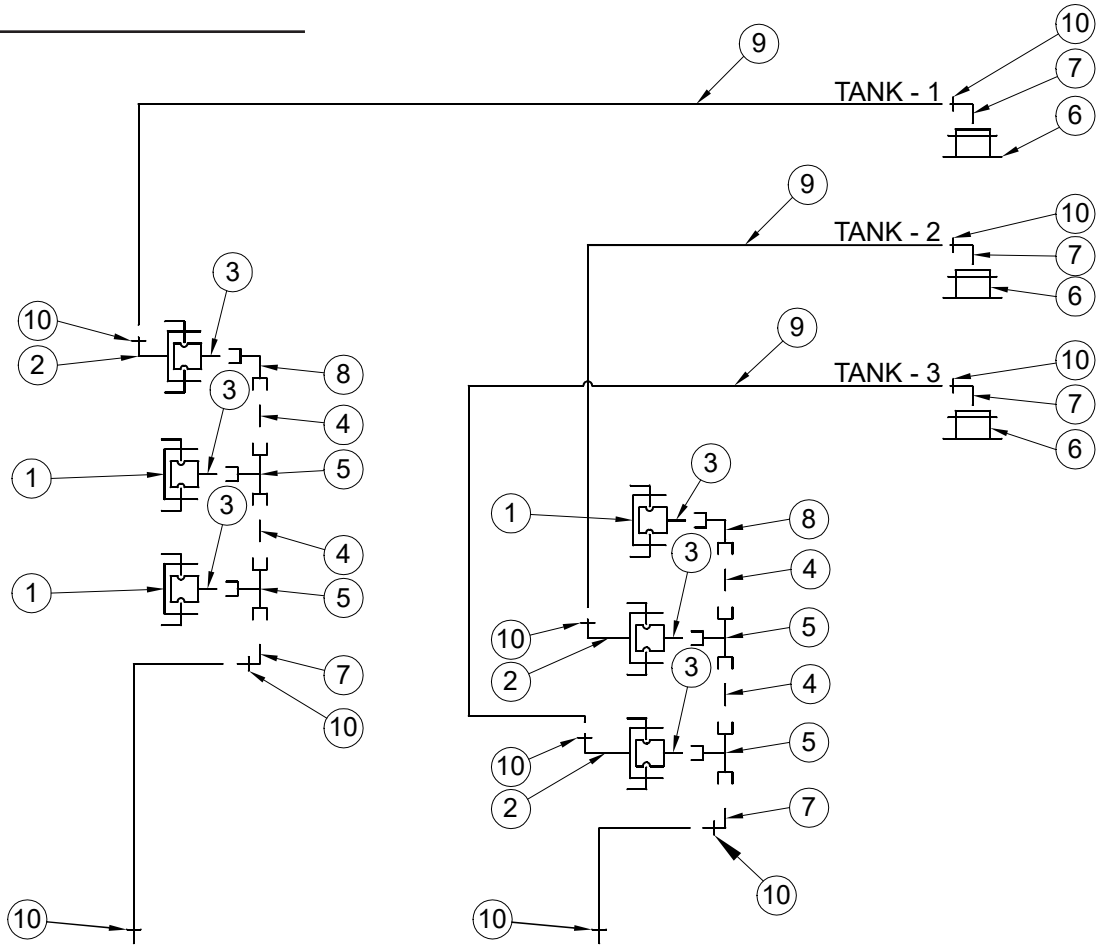

Parts Description:

Top Up Air Schematic - 780 Nova Single Shoot

Part Number: 500941

ITEM	QTY.	PART NO.	DESCRIPTION
1	8	256614	CLAMP, GEAR - S/S - 1 1/2 IN - HAS24
2	100	256506	HOSE - 1 1/2 IN - SPIRAL - LIQUID FERTILIZER
3	1	260101	BANJO, 1 1/2" POLY PIPE ELBOW 90
4	2	260120	BANJO, NIPPLE - 1 1/2 MPT - SHORT
5	2	260119	BANJO, TEE - 1 1/2 FPT X 1 1/2 FPT X 1 1/2 FPT
6	3	260118	BANJO, BULKHEAD - 1 1/2" - POLY
7	7	260104	BANJO, 1 1/2" MALE THD. X 1 1/2" HB 90

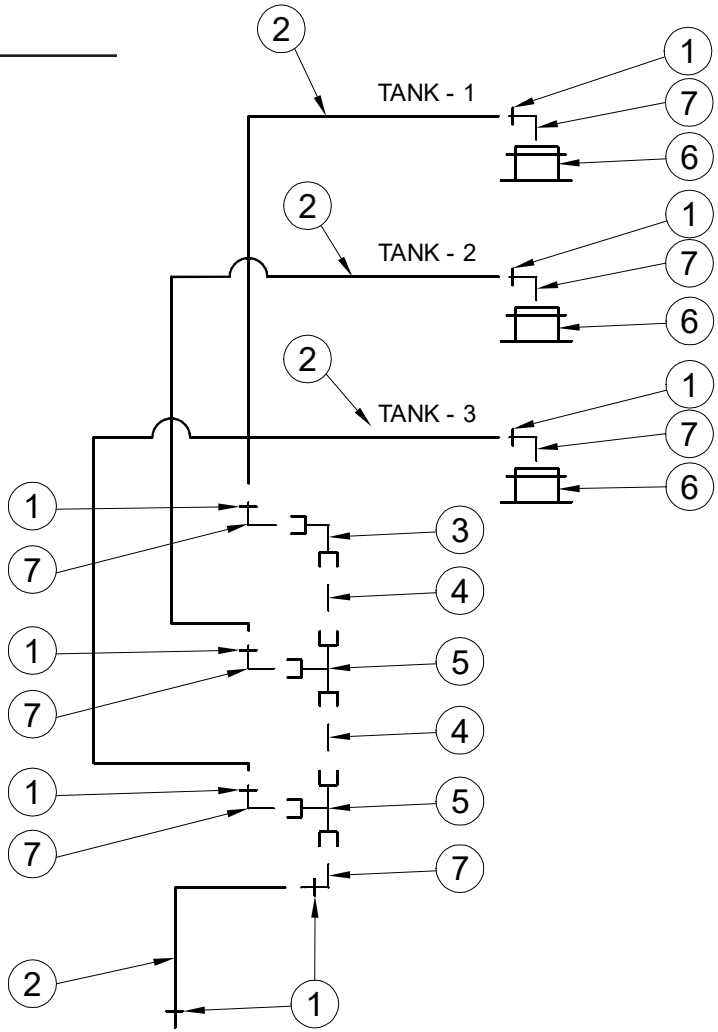

Parts Description:

Top Up Air Schematic - 820 Nova Dual Shoot

Part Number: 500943-1

ITEM	QTY.	PART NO.	DESCRIPTION
1	4	260123	BANJO, COUPLER - CAP - 1 1/2"
2	4	260122	BANJO, COUPLER - 90D - FEMALE ADAPTER - 1 1/2" HB
3	8	260121	BANJO, COUPLER - MALE ADAPTER - 1 1/2" MPT
4	6	260120	BANJO, NIPPLE - 1 1/2 MPT - SHORT
5	6	260119	BANJO, TEE - 1 1/2 FPT X 1 1/2 FPT X 1 1/2 FPT
6	3	260118	BANJO, BULKHEAD - 1 1/2" - POLY
7	5	260104	BANJO, 1 1/2" MALE THD. X 1 1/2" HB 90
8	2	260101	BANJO, 1 1/2" POLY PIPE ELBOW 90
9	110	256506	HOSE - 1 1/2 IN - SPIRAL - LIQUID FERTILIZER
10	12	256614	CLAMP, GEAR - S/S - 1 1/2 IN - HAS24

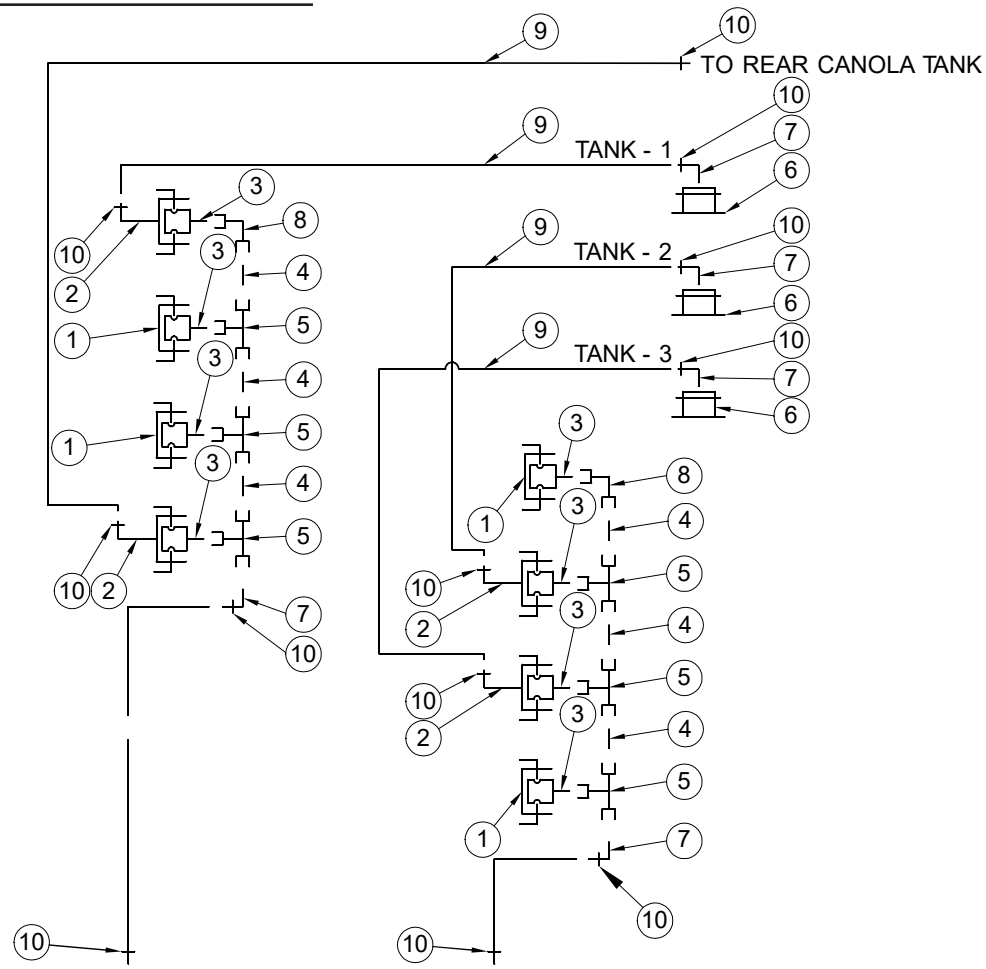

Parts Description:

Top Up Air Schematic - 820 Nova Single Shoot

Part Number: 500944

ITEM	QTY.	PART NO.	DESCRIPTION
1	10	256614	CLAMP, GEAR - S/S - 1 1/2 IN - HAS24
2	100	256506	HOSE - 1 1/2 IN - SPIRAL - LIQUID FERTILIZER
3	1	260101	BANJO, 1 1/2" POLY PIPE ELBOW 90
4	3	260120	BANJO, NIPPLE - 1 1/2 MPT - SHORT
5	3	260119	BANJO, TEE - 1 1/2 FPT X 1 1/2 FPT X 1 1/2 FPT
6	3	260118	BANJO, BULKHEAD - 1 1/2" - POLY
7	8	260104	BANJO, 1 1/2" MALE THD. X 1 1/2" HB 90

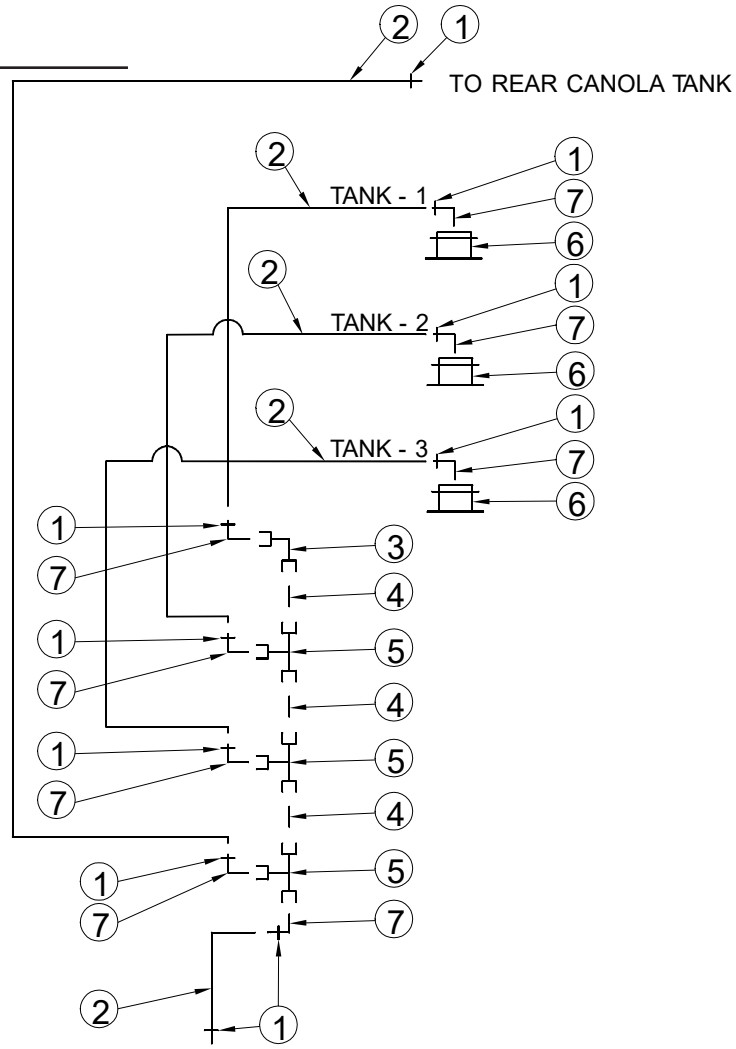

Parts Description:
Compressed Air System
Part No. 408779-9

ITEM	QTY.	PART NO.	DESCRIPTION
1	1	402137-1	ASSY, COMPRESSOR MOUNT - PACBRAKE - BLK
2	1	402118-3	PLATE, FRMD 10 GA IN - COVER - COMPRESSOR RELAY
3	1	402115-8	PLATE, FRMD 1/4 IN - AIR TANK MOUNT - ZONE COMMAND
4	8	250036	BOLT, HEX 3/8 X 1 IN GR5 PL
5	2	250106	BOLT, CARRIAGE - 5/16 X 3/4 IN UNC GR5 PL
6	2	250403	NUT, FLANGE - 5/16 UNC PL
7	12	250453	NUT, HEX - 3/8 UNC PL
8	16	250557	WASHER, FLAT - 3/8 IN GR8 PL
9	2	250213	BOLT, U-SQ - 1/2 UNC X 6ID X 5 1/2 IN - 2 IN THD - GR5 PL
10	4	250555	WASHER, FLAT - 1/2 IN - GR8 - PL
11	4	250450	NUT, HEX 1/2 UNC GR5 PL
12	6	250033	BOLT, HEX 1/4 X 1 IN GR5 PL
13	10	250559	WASHER, FLAT - 1/4 IN PL
14	4	250458	NUT, HEX - 1/4 UNC PL
15	1	257112	COMPRESSOR, KIT - 12VDC - PACBRAKE #HP10626
16	1	257109	FILTER, COMPRESSOR INTAKE - HOUSING W/FILTER
17	1	260570	ADAPTOR, BRASS - REDUCER - 3/8 MPT X 1/2 FPT
18	1	260571	ADAPTOR, BRASS - 1/2 MPT X 3/4 HB
19	1	256527	HOSE, RUBBER 3/4 IN (200 PSI)
20	1	260490	SCREEN, PRE-FILTER, COMPRESSOR INTAKE
21	1	260520	CONNECTOR, 3/8 NPT M X 3/8 PUSH ON - AIR
22	1	260535	ADAPTOR, BRASS - CROSS - 3/8 MPT - FEMALE
23	1	260574	FILTER, PARTICULATE - 14F15BB
24	1	260573	DRYER DESICCANT - WILKERSON - X06-02-000
25	1	402132	SHEET, FRMD 10 GA - MOUNT PLATE - FRT - BLK
26	1	402129	SHEET, FRMD 10 GA - MOUNT PLATE - REAR - BLK
27	1	260503	REGULATOR/FILTER, AIR - PARKER - ZONE COMMAND
28	1	260551	GAUGE, AIR - 1/8 NPT M - 0 - 160 PSI
29	1	260516	CONNECTOR - 1/4 NPT M X 3/8 PUSH ON - AIR
30	4	260576	ADAPTOR, BRASS - NIPPLE - 1/4 NPT
31	1	260575	FILTER, COALESCING - 10F15ED
32	1	260526	ADAPTOR, BRASS - HEX NIPPLE - 3/8 MPT x 1/4 MPT
33	2	250573	BOLT, HEX - 1/4 X 4 1/2 UNC - GR5 - PL
34	4	250507	NUT, LOCK - 1/4 UNC - STOVER - PL
35	1	257108	TANK, AIR - 5 GAL
36	1	260513	AUTOMATIC DRIP LEG DRAIN - 1/4 IN - 06D1NA - PARKER
37	1	402159	PLATE, FRMD 1/4 IN - MOUNT - AIR TANK - BLK
38	2	250251	BOLT, U-SQ - 3/8 UNC X 8 ID X 5 1/2 IN - 2 IN THD - GR8 PL
39	1	260504	VALVE, RELIEF - AIR - PARKER
40	1	257106	PRESSURE SWITCH - 85/105 PSI ON/OFF - 1/8 NPT

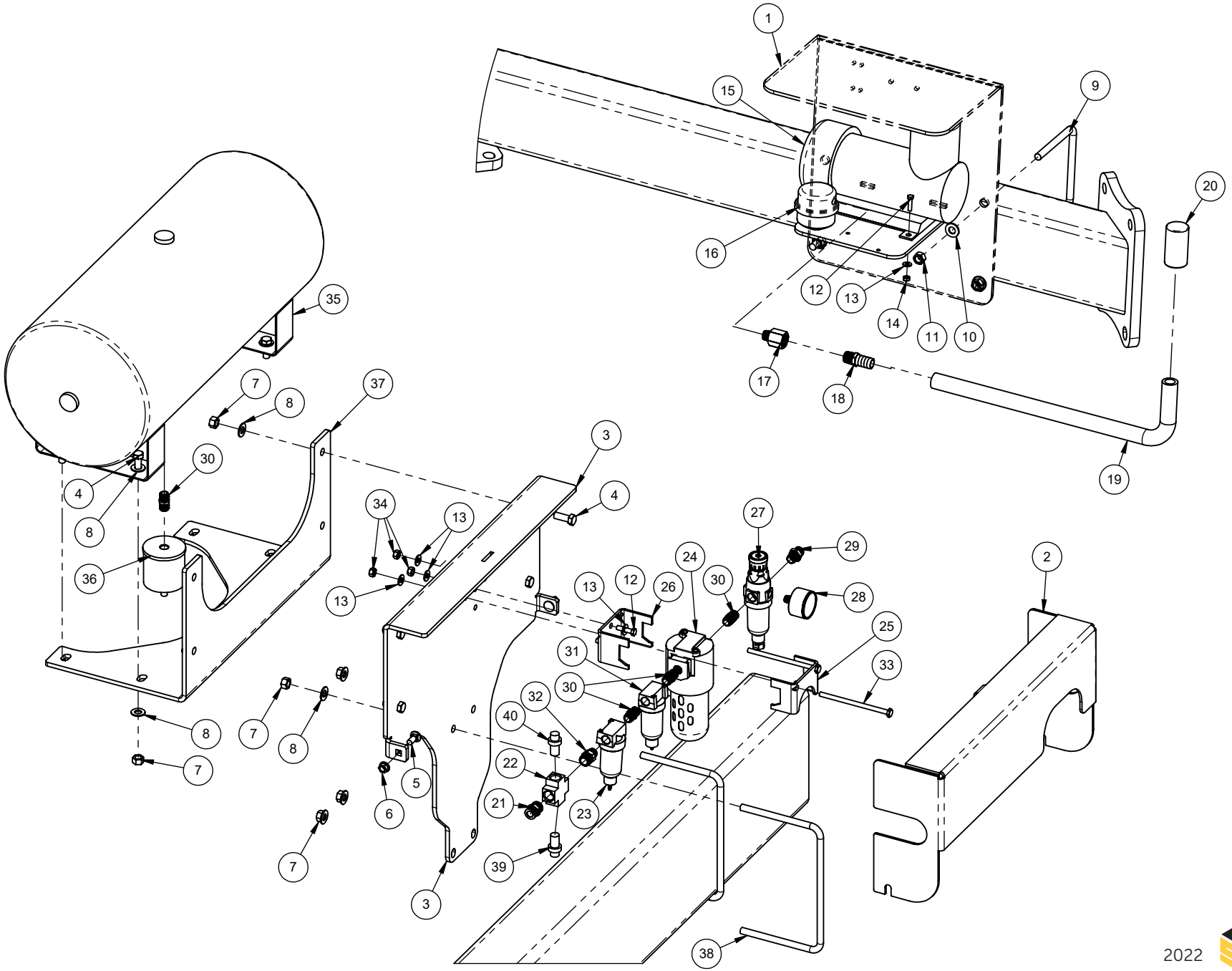
1
15
9
20
16
12
13
14
11
10
17
18
19
35
7
8
37
3
4
30
4
8
34
13
27
29
24
2
36
13
13
12
26
30
28
25
31
33
30
32
40
8
7
8
22
5
7
6
21
23
39
7
3
38

Parts Description:

Hydraulic Schematic
Meter Drive - Nova - 2 Tanks

Part Number: 401228-8

ITEM	QTY.	PART NO.	DESCRIPTION
1	2	258367-2	HOSE, 1/2-2WB X 240LOA - 08JIC F-SW X 08JIC F-SW
2	1	258154	HOSE, 3/8-2WB X 31 LOA - 06 JIC F-SW X 08 JIC F-SW
3	2	258141	HOSE, 3/8-2WB X 30 1/2 IN - 06JIC F-SW X 06JIC F-SW
4	1	258430	HOSE, 3/8-2WB X 151 LOA - 06 JIC F-SW X 08 JIC F-SW
5	1	258443	HOSE, 3/8-2WB X 68 LOA - 06 JIC F-SW X 08 JIC F-SW
6	1	258642	HOSE, 3/8-2WB X 118 LOA - 08 JIC F-SW X 06 JIC F-SW
7	6	258051	CONNECTOR, 06 ORB M X 06 JIC M
8	2	221570	TEE, GAUGE - 06 JIC F-SW X 06 JIC M X 04 ORB F - BRANCH
9	2	258053	CONNECTOR, 08 ORB M X 06 JIC M
10	2	258028	TEE, 08 JIC M X M X M
11	2	258057	CONNECTOR, 1/2 NPT M X 08 JIC M
12	1	258070	COUPLER, MALE - PIONEER - 1/2 NPT F
13	1	258071	COUPLER, MALE - NON-VALVED - 1/2 NPT F
14	2	258041	PLUG, 06 ORB M
15	1	258385	CONNECTOR, 06 ORB M X 08 JIC M
16	1	257993	CONNECTOR, 06 ORB M X 08 JIC F-SW
A	2	258092	GAUGE, PRESSURE - SPG-63-1500-S-U - GLYCERINE FILLED
B	2	260718	VALVE, PWM - OMNISEED - C/W MANIFOLD - RAVEN
C	2	260717	MOTOR, HYD - OMNISEED - 7/8 HEX - RAVEN
D	1	258611	FILTER, INLINE-ARROW 9152V-25-VITON SEAL-06 ORB

NOTE: LETTERED COMPONENTS ARE PICKED SEPARATELY
FROM HYDRAULIC KIT

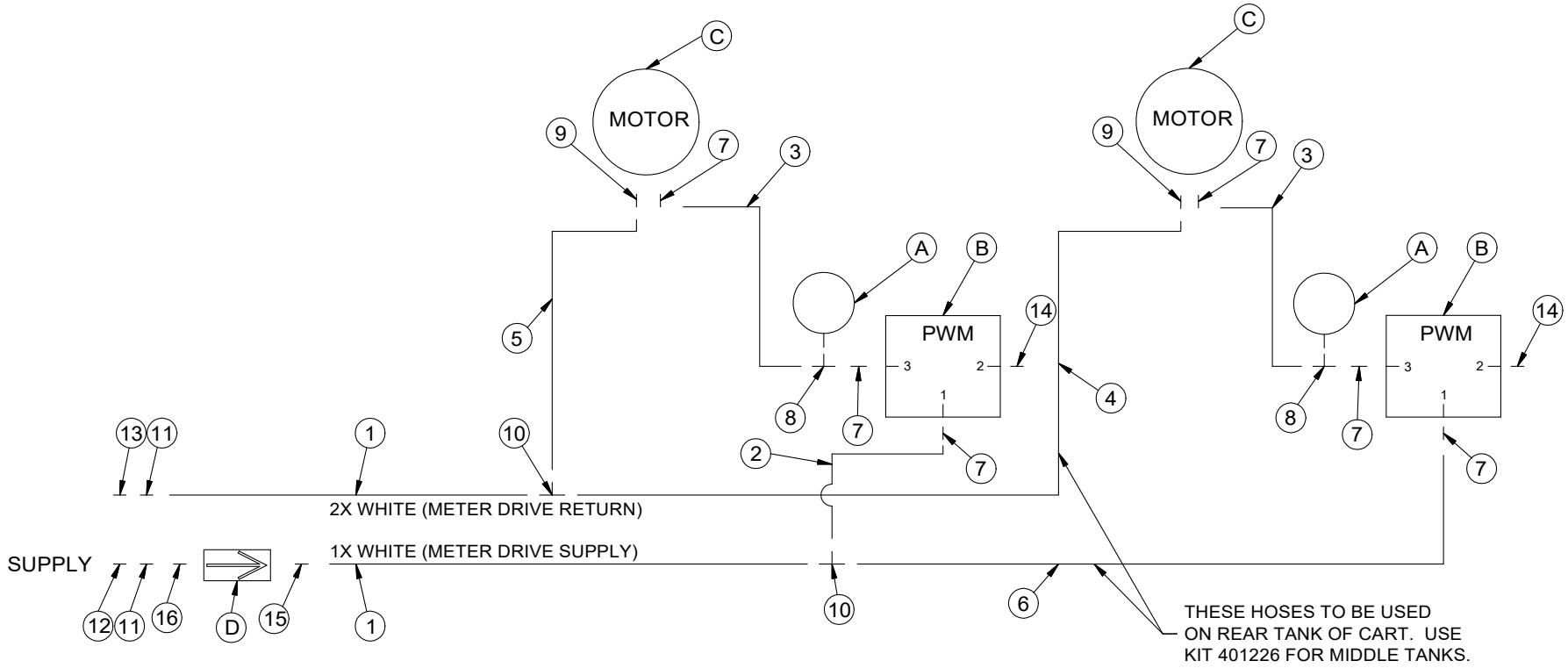

Parts Description:

Hydraulic Schematic
Meter Drive
Tow Behind Nova -3 Tanks

Part Number: 401249-5

401249-5 - CTN, HYD - METER DRIVE - TOW BEHIND NOVA - 3 TANKS			
ITEM	QTY.	PART NO.	DESCRIPTION
1	9	258051	CONNECTOR, 06 ORB M X 06 JIC M
2	4	258028	TEE, 08 JIC M X M X M
3	1	258076	COUPLER, MALE - PIONEER - 08 ORB F
4	2	258005	EL, 90D - 06 JIC M X 06 JIC F-SW
5	2	258053	CONNECTOR, 08 ORB M X 06 JIC M
6	3	221570	TEE, GAUGE - 06 JIC F-SW X 06 JIC M X 06 JIC M - RUN
7	3	258038	CONNECTOR, 06 JIC F-SW X 1/4 NPT F
8	6	258002	EL, 90D - 06 JIC M X 06 ORB M
9	2	258443	HOSE, 3/8-2WB X 68 LOA - 06 JIC F-SW X 08 JIC F-SW
10	3	258041	PLUG, 06 ORB M
11	1	258420-3	HOSE, 3/8-2WB X 99 LOA - 08 JIC F-SW X 08 JIC F-SW
12	3	258141	HOSE, 3/8-2WB X 30 1/2 LOA - 06 JIC F-SW X 06 JIC F-SW
13	2	258154	HOSE, 3/8-2WB X 31 LOA - 06 JIC F-SW X 08 JIC F-SW
14	1	258050	CONNECTOR, 08 ORB M X 08 JIC M
15	2	258137	HOSE, 1/2-2WB X 48LOA - 08JIC F-SW X 08JIC F-SW
16	2	258367-2	HOSE, 1/2-2WB X 240LOA - 08JIC F-SW X 08JIC F-SW
17	1	258057	CONNECTOR, 1/2 NPT M X 08 JIC M
18	1	258071	COUPLER, MALE - NON-VALVED - 1/2 NPT F
19	2	258385	CONNECTOR, 06 ORB M X 08 JIC M
20	1	258000	EL, 90D - 08 JIC M X 08 JIC F-SW
21	1	258050	CONNECTOR, 08 ORB M X 08 JIC M
22	1	258249	HOSE, 1/2-2WB X 12LOA - 06JIC F-SW X 06JIC F-SW
23	1	257993	CONNECTOR, 06 ORB M X 08 JIC F-SW
A	3	258094	GAUGE, PRESSURE - SPG-1500P 1/4 NPT
B	3	260717	MOTOR, HYD - OMNISEED - 7/8 HEX - RAVEN
C	3	260874	VALVE, PWM - OMNISEED - C/W MANIFOLD - RAVEN
D	1	258611	FILTER, INLINE - ARROW 9152V-25 - VITON SEAL - 06 ORB

NOTE: LETTERED COMPONENTS ARE
PICKED SEPARATELY FROM HYDRAULIC KIT

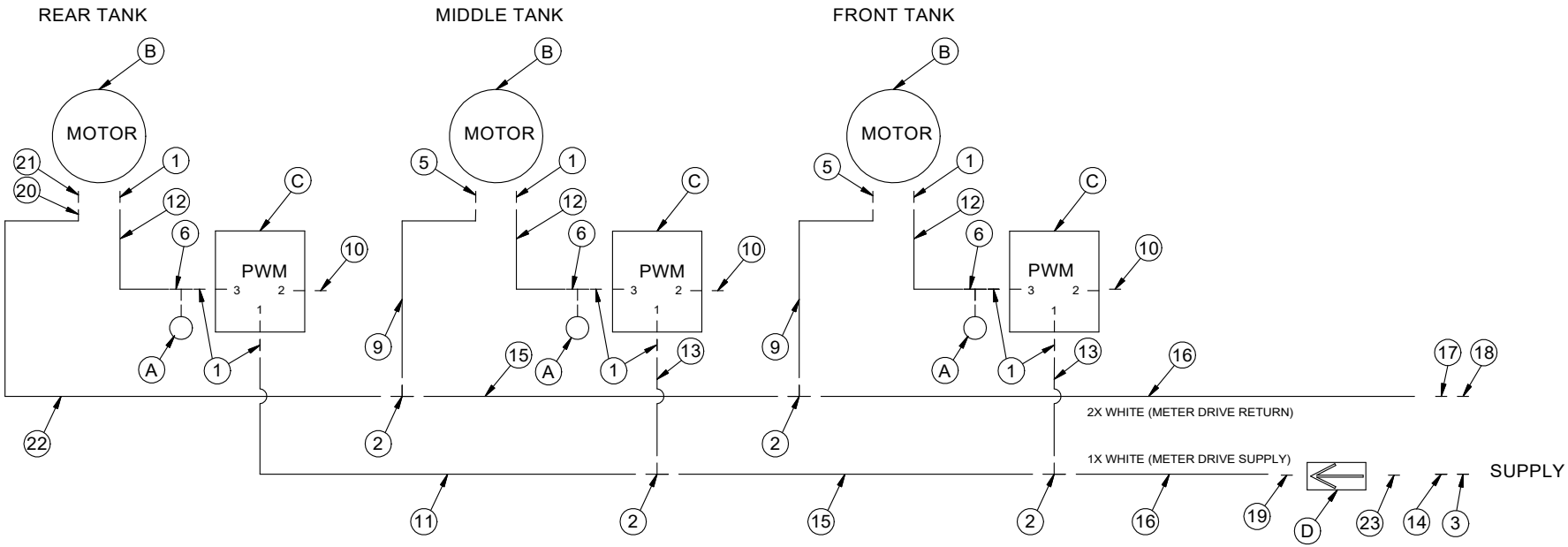

Parts Description:

Hydraulic Schematic
Meter Drive
Nova - 260 L - 1 Tank

Part Number: 401260-3

ITEM	QTY.	PART NO.	DESCRIPTION
1	2	258347	HOSE, 1/2-2WB X 252LOA - 08JIC F-SW X 08JIC F-SW
2	1	258154	HOSE, 3/8-2WB X 31 LOA - 06 JIC F-SW X 08 JIC F-SW
3	1	258141	HOSE, 3/8-2WB X 30 1/2 IN - 06JIC F-SW X 06JIC F-SW
5	1	258443	HOSE, 3/8-2WB X 68 LOA - 06 JIC F-SW X 08 JIC F-SW
7	3	258051	CONNECTOR, 06 ORB M X 06 JIC M
9	1	258053	CONNECTOR, 08 ORB M X 06 JIC M
10	2	257979	EL, 90D - 08 JIC M X M
11	2	258057	CONNECTOR, 1/2 NPT M X 08 JIC M
12	1	258070	COUPLER, MALE - PIONEER - 1/2 NPT F
13	1	258071	COUPLER, MALE - NON-VALVED - 1/2 NPT F
14	1	258041	PLUG, 06 ORB M
16	1	221570	TEE, GAUGE - 06 JIC F-SW X 06 JIC M X 04 ORB F - RUN
17	1	258385	CONNECTOR, 06 ORB M X 08 JIC M
18	1	257993	CONNECTOR, 06 ORB M X 08 JIC F-SW
A	1	258092	GAUGE, PRESSURE - SPG-63-1500-S-U - GLYCERINE FILLED
B	1	260718	VALVE, PWM - OMNISEED - C/W MANIFOLD - RAVEN
C	1	260717	MOTOR, HYD - OMNISEED - 7/8 HEX - RAVEN
D	1	258611	FILTER, INLINE-ARROW 9152V-25-VITON SEAL-06 ORB

NOTE: LETTERED COMPONENTS ARE
PICKED SEPARATELY FROM HYDRAULIC KIT

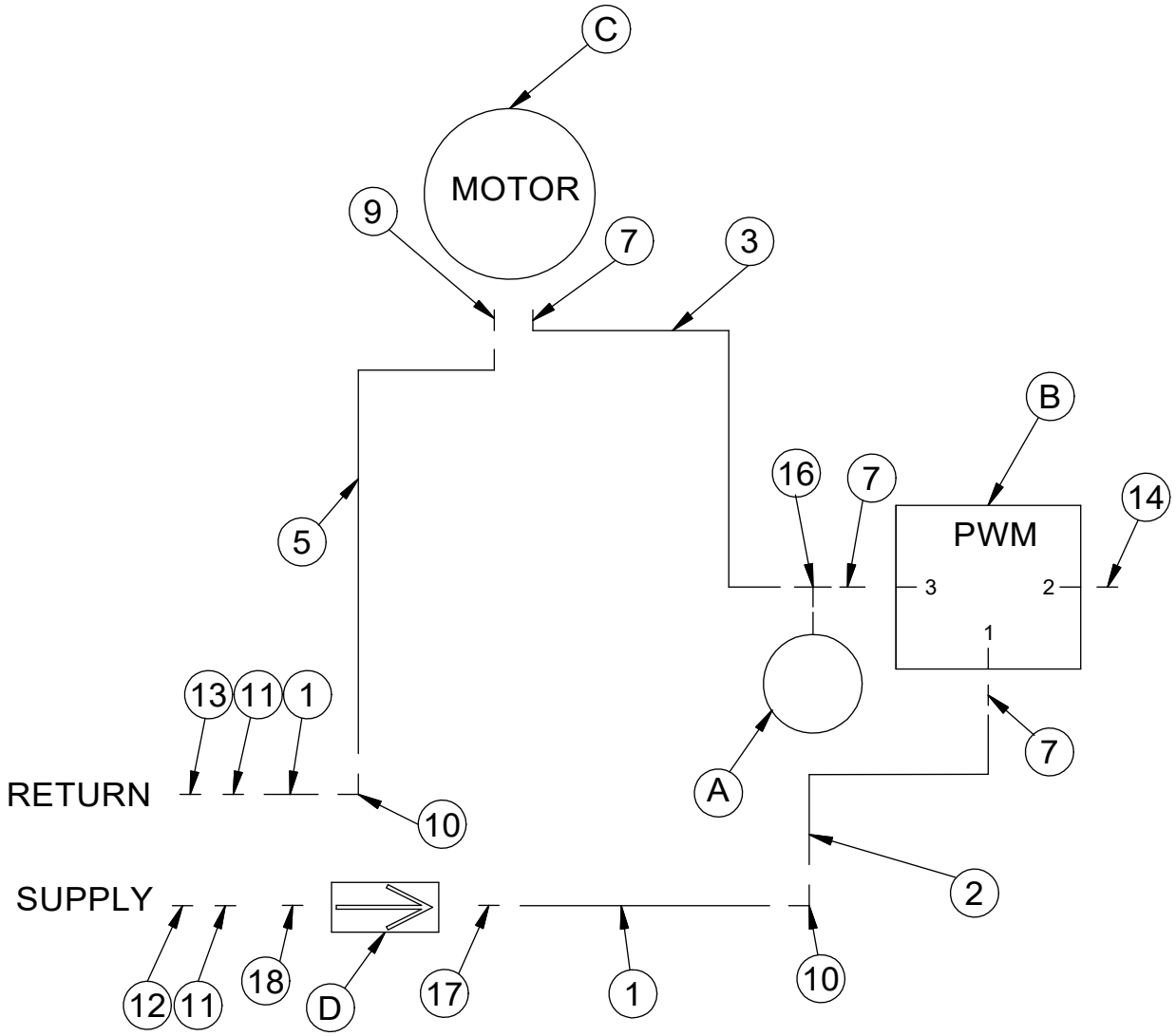

Parts Description:

Hydraulic Schematic
Meter Drive
Nova T/B - 2 Tanks

Part Number: 401276-1

ITEM	QTY.	PART NO.	DESCRIPTION
1	6	258051	CONNECTOR, 06 ORB M X 06 JIC M
2	2	258028	TEE, 08 JIC M X M X M
3	1	258076	COUPLER, MALE - PIONEER - 08 ORB F
5	2	258053	CONNECTOR, 08 ORB M X 06 JIC M
6	2	221570	TEE, GAUGE - 06 JIC F-SW X 06 JIC M X 04 ORB F - RUN
9	2	258443	HOSE, 3/8-2WB X 68 LOA - 06 JIC F-SW X 08 JIC F-SW
10	2	258041	PLUG, 06 ORB M
11	1	258446	HOSE, 1/2-2WB X 90LOA - 08JIC F-SW X 08JIC F-SW
12	2	258141	HOSE, 3/8-2WB X 30 1/2LOA - 06 JIC F-SW X 06 JIC F-SW
13	2	258511	HOSE, 1/2-2WB X 95 LOA - 08 JIC F-SW X 08 JIC F-SW
14	1	258154	HOSE, 3/8-2WB X 31 LOA - 06 JIC F-SW X 08 JIC F-SW
15	1	258430	HOSE, 3/8-2WB X 151 LOA - 06 JIC F-SW X 08 JIC F-SW
16	1	258057	CONNECTOR, 1/2 NPT M X 08 JIC M
17	1	258050	CONNECTOR, 08 ORB M X 08 JIC M
18	1	258385	CONNECTOR, 06 ORB M X 08 JIC M
19	1	258020	TEE, 08 JIC F-SW X 08 JIC M X 08 JIC M - RUN
20	1	257993	CONNECTOR, 06 ORB M X 08 JIC F-SW
21	1	258073	COUPLER, FEMALE - NON-VALVED - 1/2 NPT F
22	1	258075	PLUG, DUST - STRAIGHT THROUGH
A	2	258092	GAUGE, PRESSURE - SPG-63-1500-S-U - GLYCERINE FILLED
B	2	260717	MOTOR, HYD - OMNISEED - 7/8 HEX - RAVEN
C	2	260718	VALVE, PWM - OMNISEED - C/W MANIFOLD - RAVEN
D	1	258611	FILTER, INLINE-ARROW 9152V-25-VITON SEAL-06 ORB
E	2	257999	VALVE, CHECK - INLINE - 08 JIC MXF - VONBERG - 1908MF-03

NOTE: LETTERED COMPONENTS ARE
PICKED SEPARATELY FROM HYDRAULIC KIT

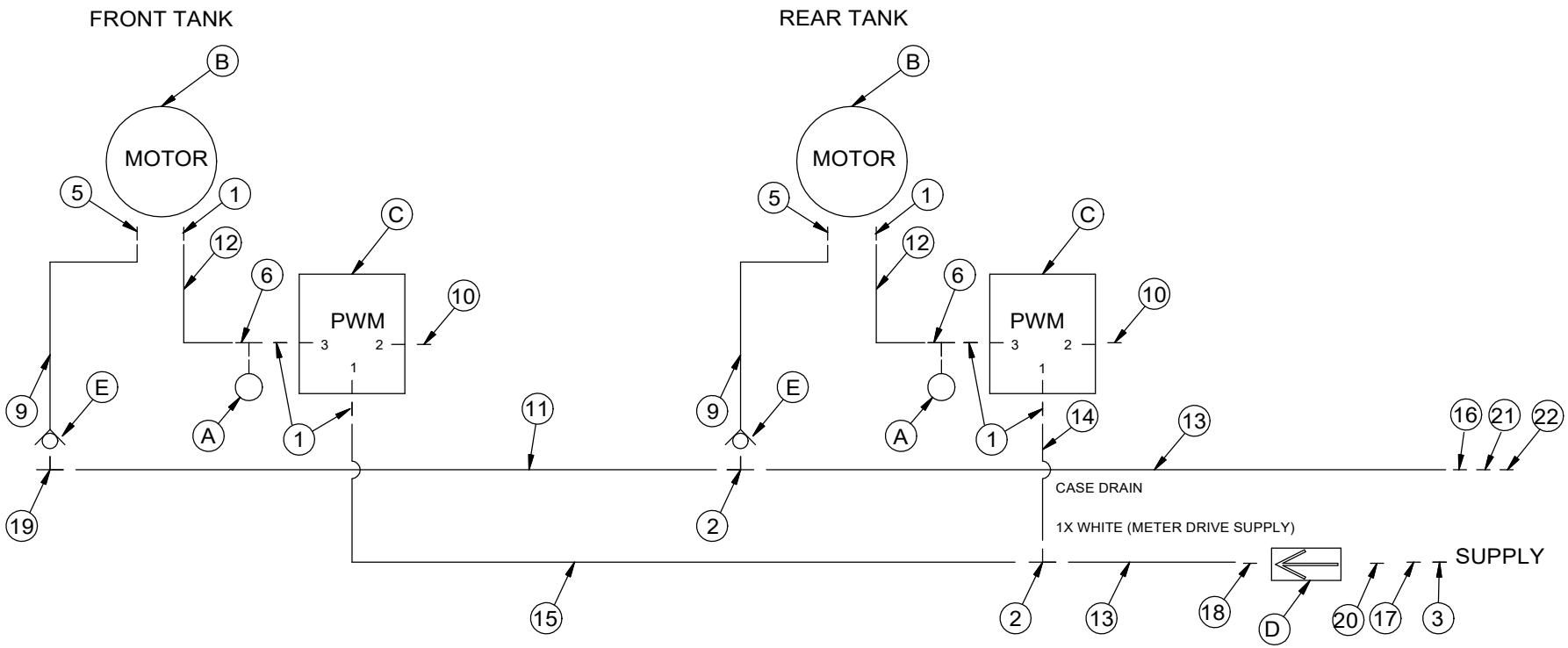

Parts Description:

Hydraulic Schematic Meter Drive T/B Nova + 1 Tank

Part Number: 401277-1

ITEM	QTY.	PART NO.	DESCRIPTION
1	1	258020	TEE, 08 JIC F-SW X 08 JIC M X 08 JIC M - RUN
2	2	258028	TEE, 08 JIC M X M X M
3	3	258051	CONNECTOR, 06 ORB M X 06 JIC M
5	2	258053	CONNECTOR, 08 ORB M X 06 JIC M
6	2	221570	TEE, GAUGE - 06 JIC F-SW X 06 JIC M X 04 ORB F - RUN
9	2	258443	HOSE, 3/8-2WB X 68 LOA - 06 JIC F-SW X 08 JIC F-SW
10	2	258041	PLUG, 06 ORB M
11	2	258446	HOSE, 1/2-2WB X 90LOA - 08JIC F-SW X 08JIC F-SW
12	2	258141	HOSE, 3/8-2WB X 30 1/2LOA - 06 JIC F-SW X 06 JIC F-SW
13	1	258154	HOSE, 3/8-2WB X 31 LOA - 06 JIC F-SW X 08 JIC F-SW
A	2	258092	GAUGE, PRESSURE - SPG-63-1500-S-U - GLYCERINE FILLED
B	2	260717	MOTOR, HYD - OMNISEED - 7/8 HEX - RAVEN
C	2	260718	VALVE, PWM - OMNISEED - C/W MANIFOLD - RAVEN
D	1	258611	FILTER, INLINE-ARROW 9152V-25-VITON SEAL-06 ORB
E	2	257999	VALVE, CHECK - INLINE - 08 JIC MXF - VONBERG - 1908MF-03

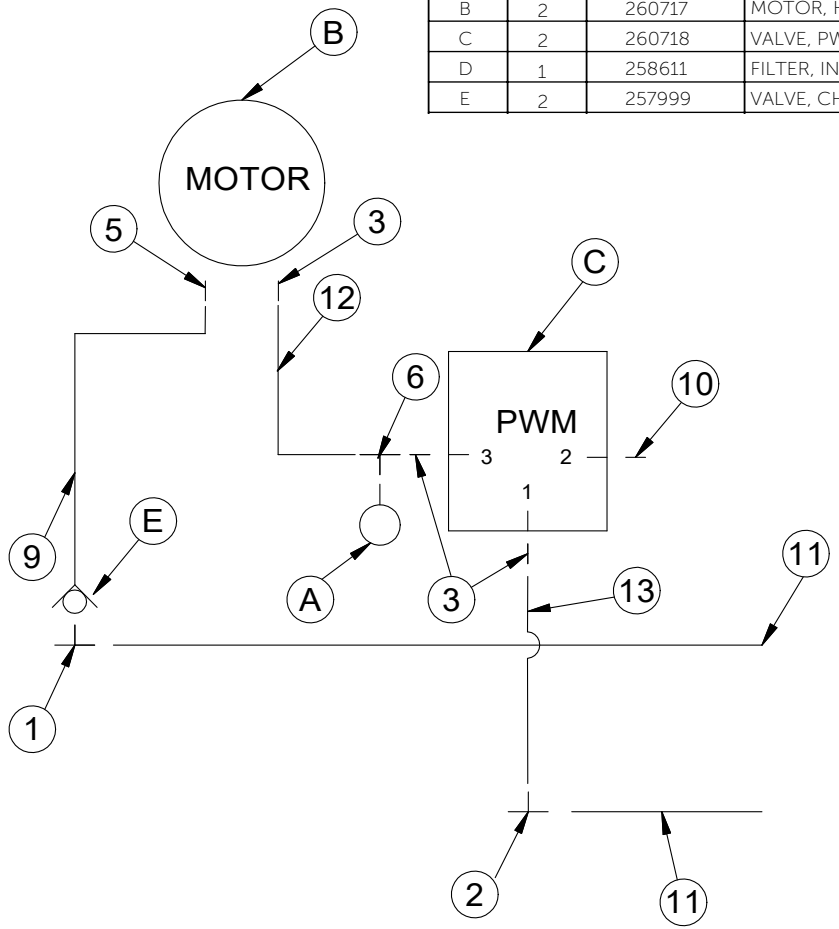

Parts Description:

Hydraulic Schematic Meter Drive + 1 Tank

Part Number: 401226-4

ITEM	QTY.	PART NO.	DESCRIPTION
1	2	258446	HOSE, 1/2-2WB X 90LOA - 08JIC F-SW X 08JIC F-SW
2	1	258154	HOSE, 3/8-2WB X 31 LOA - 06 JIC F-SW X 08 JIC F-SW
3	1	258141	HOSE, 3/8-2WB X 30 1/2 IN - 06JIC F-SW X 06JIC F-SW
4	1	258443	HOSE, 3/8-2WB X 68 LOA - 06 JIC F-SW X 08 JIC F-SW
5	1	221570	TEE, GAUGE - 06 JIC F-SW X 06 JIC M X 04 ORB F - RUN
6	3	258051	CONNECTOR, 06 ORB M X 06 JIC M
7	1	258041	PLUG, 06 ORB M
8	1	258053	CONNECTOR, 08 ORB M X 06 JIC M
9	2	258028	TEE, 08 JIC M X M X M
A	1	258092	GAUGE, PRESSURE - SPG-63-1500-S-U - GLYCERINE FILLED
B	1	260717	MOTOR, HYD - OMNISEED - 7/8 HEX - RAVEN
C	1	260718	VALVE, PWM - OMNISEED - C/W MANIFOLD - RAVEN

NOTE: LETTERED COMPONENTS ARE PICKED SEPARATELY FROM HYDRAULIC KIT

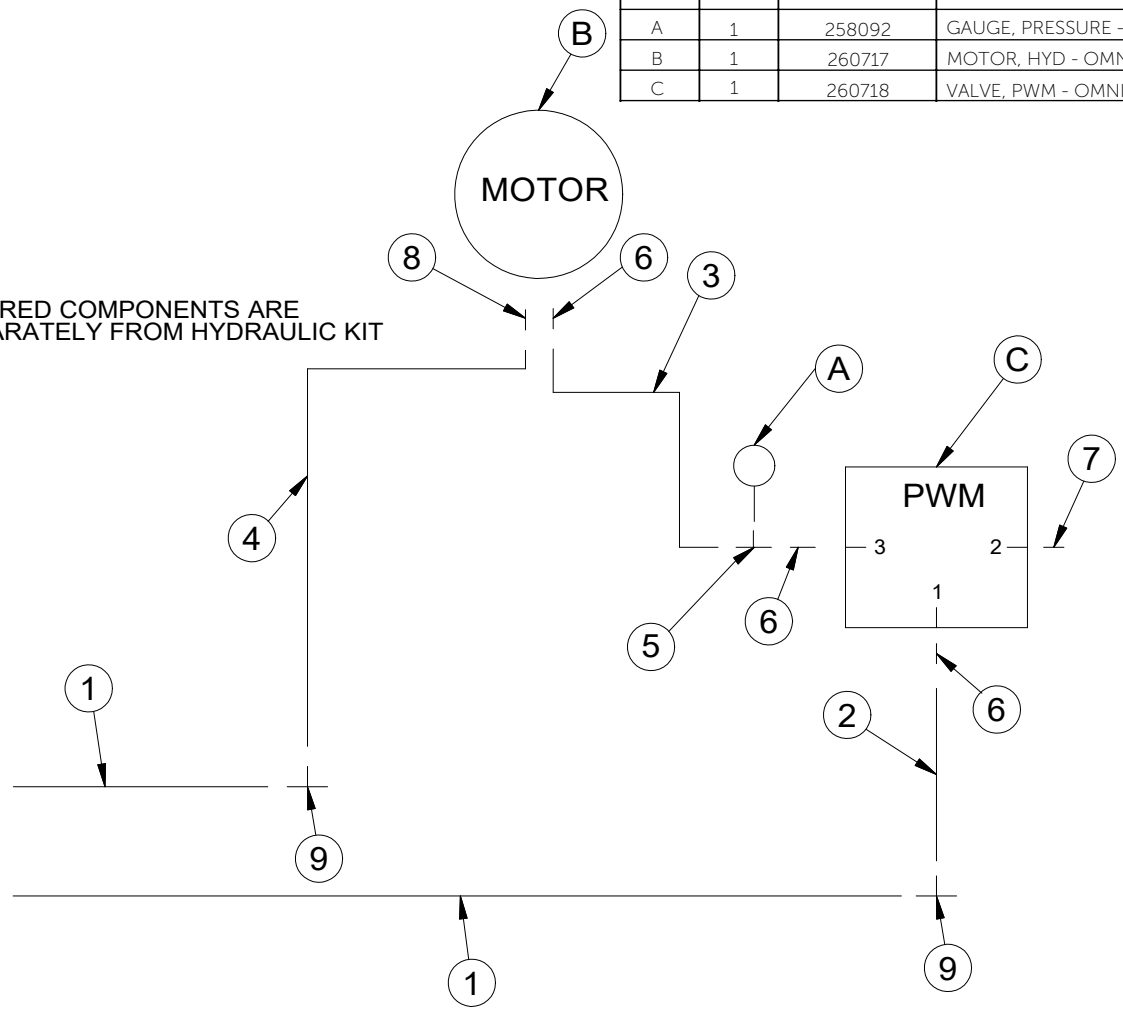

Parts Description:

Hydraulic Schematic Meter Drive - T/B Nova - 3 Tanks

Part Number: 401246-6

ITEM	QTY.	PART NO.	DESCRIPTION
1	9	258051	CONNECTOR, 06 ORB M X 06 JIC M
2	4	258028	TEE, 08 JIC M X M X M
3	1	258076	COUPLER, MALE - PIONEER - 08 ORB F
5	3	258053	CONNECTOR, 08 ORB M X 06 JIC M
6	3	221570	TEE, GAUGE - 06 JIC F-SW X 06 JIC M X 04 ORB F - RUN
9	3	258443	HOSE, 3/8-2WB X 68 LOA - 06 JIC F-SW X 08 JIC F-SW
10	3	258041	PLUG, 06 ORB M
11	2	258442	HOSE, 3/8-2WB X 68LOA - 08 JIC F-SW X 08 JIC F-SW
12	3	258141	HOSE, 3/8-2WB X 30 1/2LOA - 06 JIC F-SW X 06 JIC F-SW
13	1	401077-2	ASSY, HOSE - 1/2-2WB X 76 LOA - C/W FITTINGS
14	2	258154	HOSE, 3/8-2WB X 31 LOA - 06 JIC F-SW X 08 JIC F-SW
15	1	258137	HOSE, 1/2-2WB X 48LOA - 08JIC F-SW X 08JIC F-SW
16	2	258441	HOSE, 1/2-2WB X 76 LOA - 08 JIC F-SW X 08 JIC F-SW
17	1	258050	CONNECTOR, 08 ORB M X 08 JIC M
18	1	258385	CONNECTOR, 06 ORB M X 08 JIC M
19	1	258020	TEE, 08 JIC F-SW X 08 JIC M X 08 JIC M - RUN
21	1	257993	CONNECTOR, 06 ORB M X 08 JIC F-SW
A	2	258092	GAUGE, PRESSURE - SPG-63-1500-S-U - GLYCERINE FILLED
B	2	260717	MOTOR, HYD - OMNISEED - 7/8 HEX - RAVEN
C	2	260718	VALVE, PWM - OMNISEED - C/W MANIFOLD - RAVEN
D	1	258611	FILTER, INLINE-ARROW 9152V-25-VITON SEAL-06 ORB
E	3	257999	VALVE, CHECK - INLINE - 08 JIC MXF - VONBERG - 1908MF-03

NOTE: LETTERED COMPONENTS ARE PICKED
SEPARATELY FROM HYDRAULIC KIT

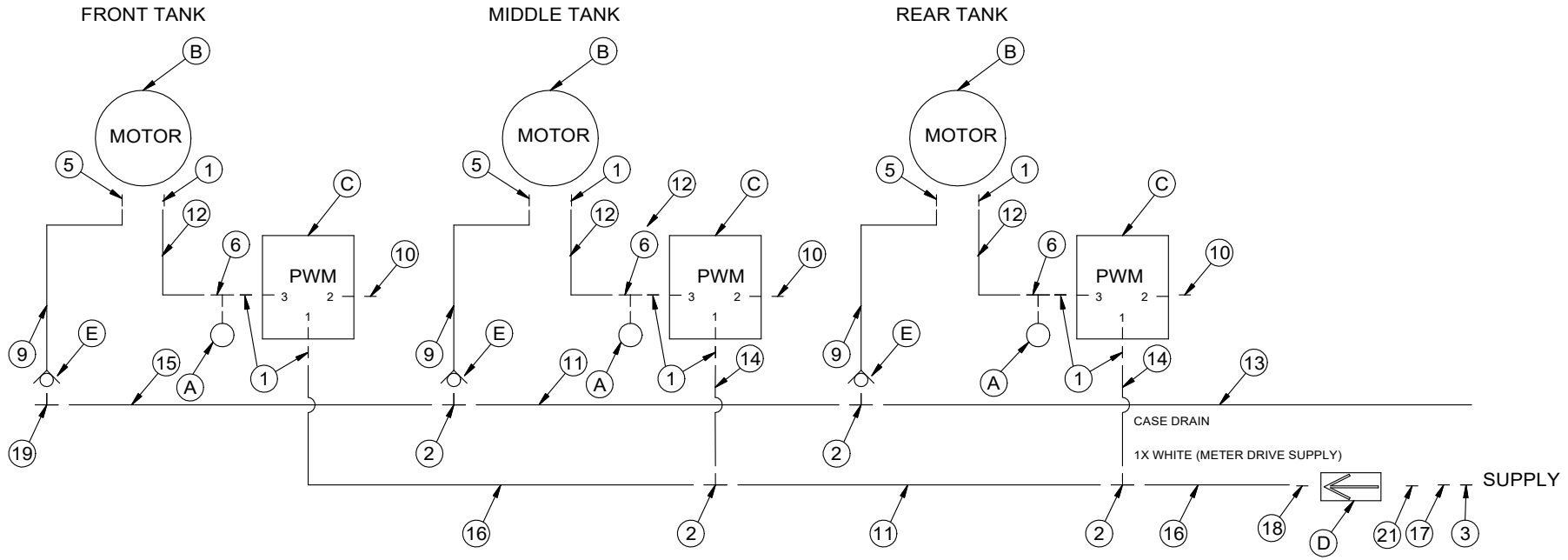

Parts Description:

Hydraulic Schematic Lids - Single Shoot

Part Number: 401229-4

ITEM	QTY.	PART NO.	DESCRIPTION
1	2	258569	HOSE, 3/8-2WB X 90LOA - 08JIC F-SW X 06JIC F-SW
2	2	257998	CONNECTOR, 08 ORBM X 06 JIC M - .020 ORIFICE
3	2	258457	HOSE, 3/8-2WB X 203LOA - 06JIC F-SW X 06JIC F-SW
4	1	258107	HOSE, 3/8-2WB X 87LOA - 06JIC F-SW X 06JIC F-SW
5	1	258191	HOSE, 3/8-2WB X 75LOA - 06JIC F-SW X 06JIC F-SW
6	1	258165	HOSE, 3/8-2WB X 96LOA - 06 JIC F-SW X 06 JIC F-SW
7	8	258005	EL, 90D - 06 JIC M X 06 JIC F-SW
8	2	258053	CONNECTOR, 08 ORB M X 06 JIC M
9	3	258024	TEE, 06 JIC M X M X M
10	1	257986	CONNECTOR, 06 JIC M X 06 JIC F - .020 ORIFICE
11	1	258026	TEE, 06 JIC M X 06 JIC M X 06 JIC F-SW - BRANCH
12	1	258124	HOSE, 3/8-2WB X 79LOA - 06 JIC F-SW X 06 JIC F-SW
A	1	258089	VALVE, CHECK - INLINE - 06 JIC M X F - VONBERG

NOTE: LETTERED COMPONENTS ARE
PICKED SEPARATELY FROM HYDRAULIC KIT

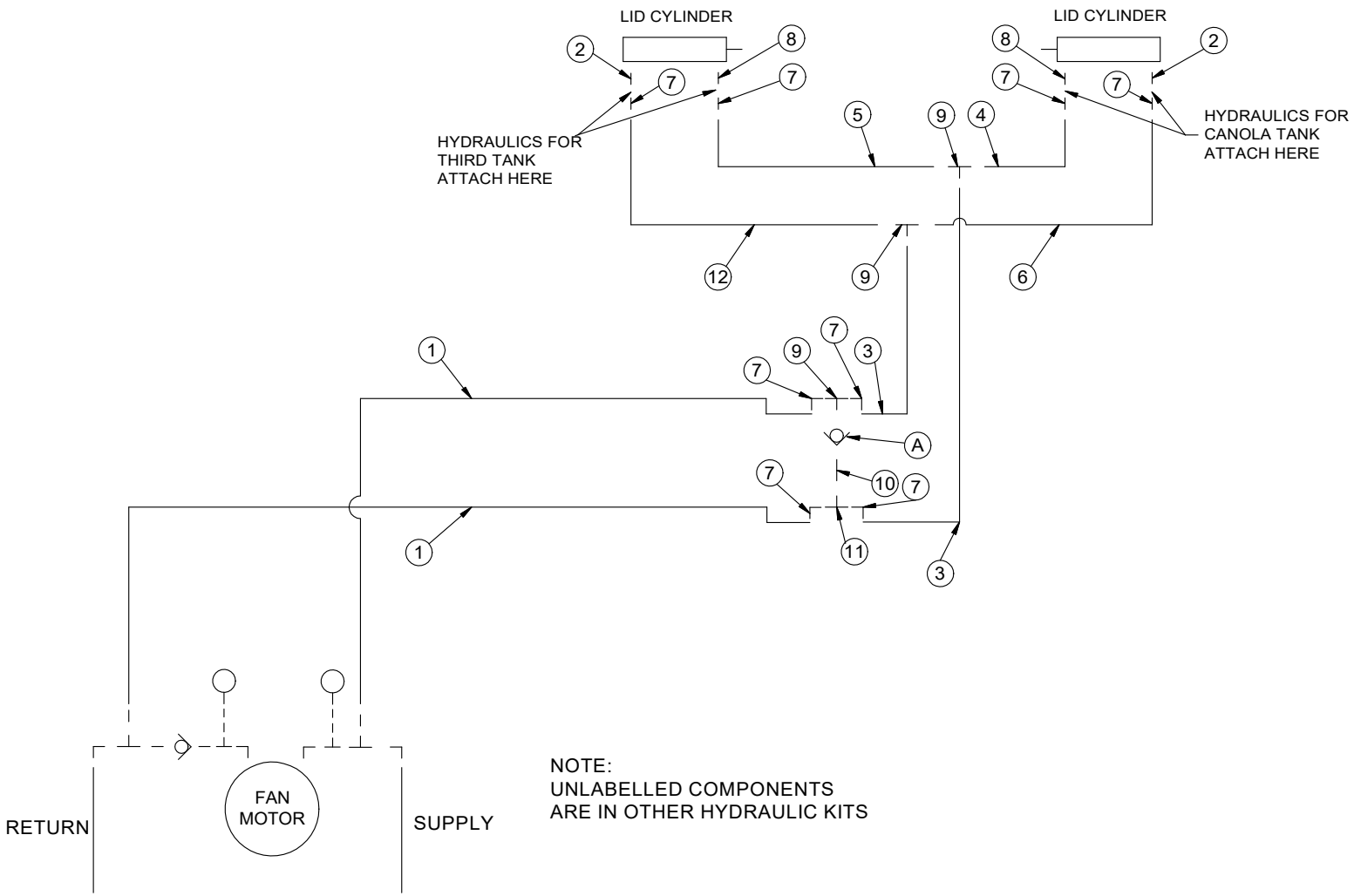

NOTE:
UNLABELLED COMPONENTS
ARE IN OTHER HYDRAULIC KITS

Parts Description:

Hydraulic Schematic Lids - Dual Shoot

Part Number: 401230-9

ITEM	QTY.	PART NO.	DESCRIPTION
1	4	258569	HOSE, 3/8-2WB X 90LOA - 08JIC F-SW X 06JIC F-SW
2	2	258457	HOSE, 3/8-2WB X 203LOA - 06JIC F-SW X 06JIC F-SW
3	1	258107	HOSE, 3/8-2WB X 87LOA - 06JIC F-SW X 06JIC F-SW
4	8	258053	CONNECTOR, 08 ORB M X 06 JIC M
5	10	258005	EL, 90D - 06 JIC M X 06 JIC F-SW
6	2	258024	TEE, 06 JIC M X M X M
7	2	257998	CONNECTOR, 08 ORBM X 06 JIC M - .020 ORIFICE
8	1	258165	HOSE, 3/8-2WB X 96LOA - 06 JIC F-SW X 06 JIC F-SW
9	1	258191	HOSE, 3/8-2WB X 75LOA - 06JIC F-SW X 06JIC F-SW
10	1	258124	HOSE, 3/8-2WB X 79LOA - 06JIC F-SW X 06 JIC F-SW
A	1	258214	MANIFOLD, HYD - AUTO LID PRESSURE SELECTOR- JEM

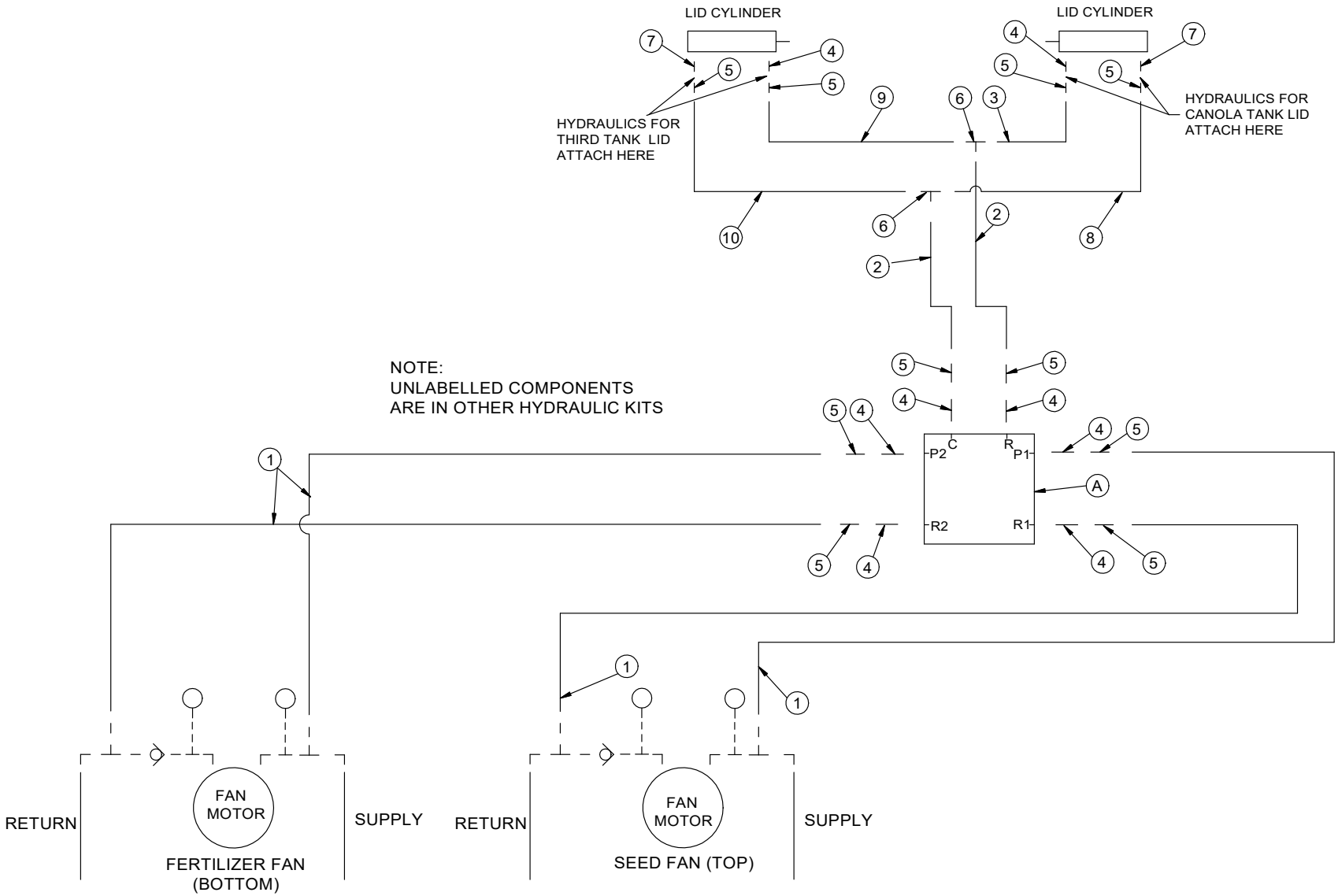
LID CYLINDER
LID CYLINDER
HYDRAULICS FOR THIRD TANK LID ATTACH HERE
HYDRAULICS FOR CANOLA TANK LID ATTACH HERE
NOTE:
UNLABELLED COMPONENTS
ARE IN OTHER HYDRAULIC KITS
C
R
P2
P1
R2
R1
A
RETURN
FAN MOTOR
SUPPLY
FERTILIZER FAN (BOTTOM)
RETURN
FAN MOTOR
SUPPLY
SEED FAN (TOP)

Parts Description:

Hydraulic Flow Schematic
Lid Selector Valve

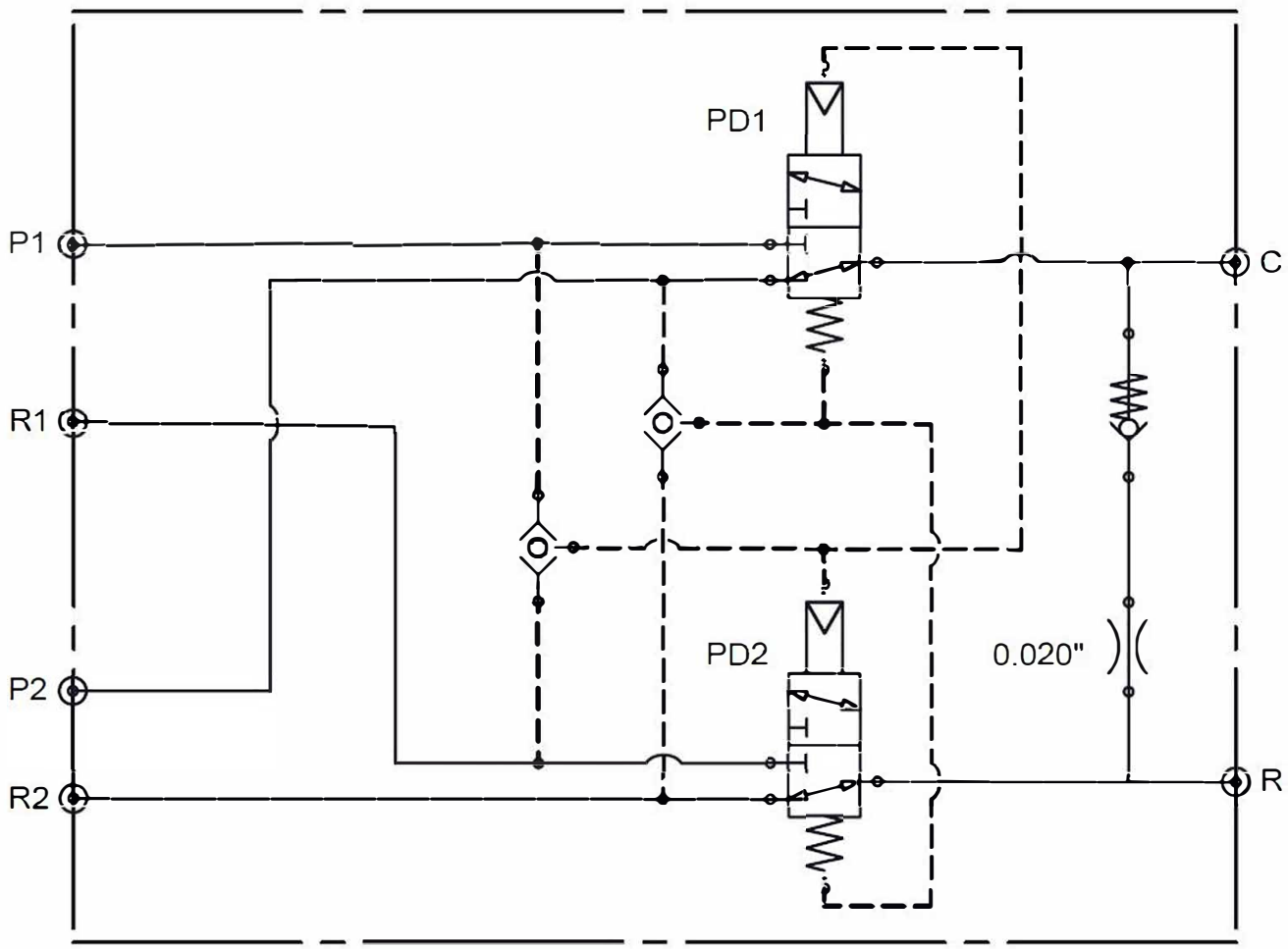

Parts Description:

Hydraulic Schematic Lids + 1 Tank

Part Number: 401231-4

ITEM	QTY.	PART NO.	DESCRIPTION
1	2	258114	HOSE, 3/8-2WB X 107LOA - 06JIC F-SW X 06JIC F-SW
2	1	258053	CONNECTOR, 08 ORB M X 06 JIC M
3	1	257998	CONNECTOR, 08 ORBM X 06 JIC M - .020 ORIFICE
4	2	258024	TEE, 06 JIC M X 06 JIC M X 06 JIC M
5	2	258005	EL, 90D - 06 JIC M X 06 JIC F - SW
6	2	258228	HOSE, 3/8-2WB X 20 LOA - 06 JIC F-SW X 06 JIC F-SW

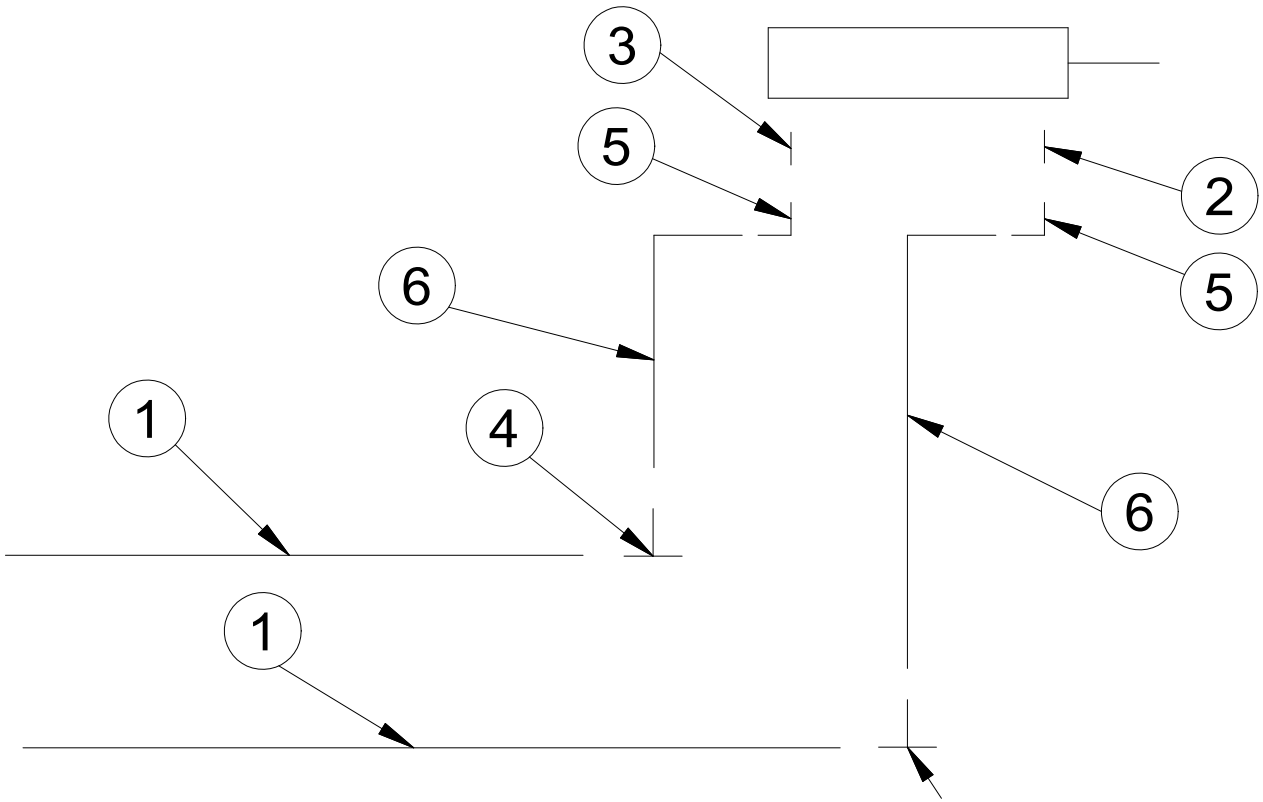

Parts Description:

Hydraulic Schematic Lids - Canola Tank

Part Number: 401240-2

ITEM	QTY.	PART NO.	DESCRIPTION
1	2	258231	HOSE, 3/8-2WB X 132 LOA - 06 JIC F-SW X 06 JIC F-SW
2	1	258053	CONNECTOR, 08 ORB M X 06 JIC M
3	1	257998	CONNECTOR, 08 ORBM X 06 JIC M - .020 ORIFICE
4	2	258026	TEE, 06 JIC M X 06 JIC M X 06 JIC F-SW - BRANCH
5	2	258005	EL, 90D - 06 JIC M X 06 JIC F-SW

NOTE: HOSE EXTENSION PART NO. 401296

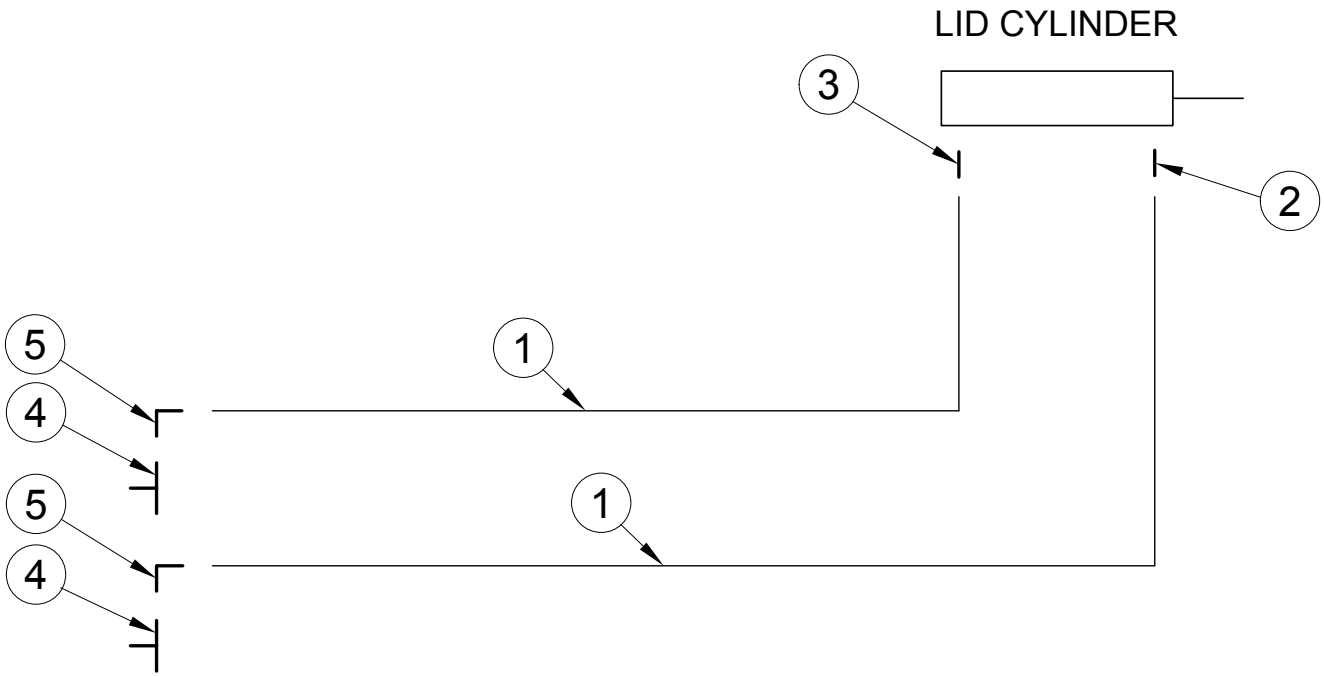

Parts Description:

Hydraulic Schematic
Lids - 110 BU Tank - T/B Nova

Part Number: 401242

ITEM	QTY.	PART NO.	DESCRIPTION
1	2	258285	HOSE, 3/8-2WB X 42 LOA - 06 JIC F-SW X 06 JIC F-SW
2	4	258024	TEE, 06 JIC M X 06 JIC M X 06 JIC M
3	2	258005	EL, 90D - 06 JIC M X 06 JIC F-SW
4	2	257998	CONNECTOR, 08 ORBM X 06 JIC M - .020 ORIFICE
5	2	258053	CONNECTOR, 08 ORB M X 06 JIC M
6	4	258111	HOSE, 3/8-2WB X 16 1/2LOA - 06JIC F-SW X 06JIC F-SW
7	2	258134	HOSE, 3/8-2WB X 54 LOA - 06JIC F-SW X 06JIC F-SW

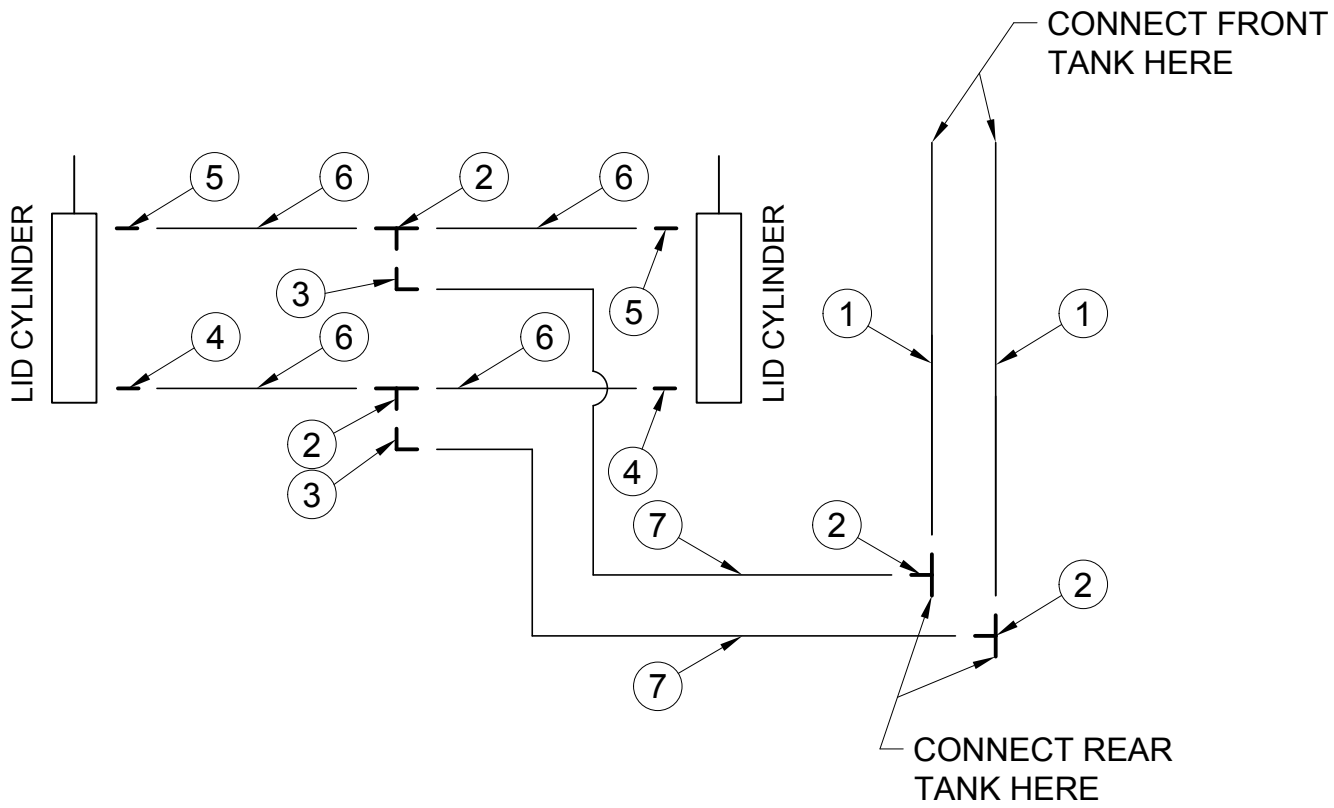

Parts Description:

Hydraulic Schematic
Dual Fans

Part Number: 401237-6 – 780 Nova
401253-2 – 820 Nova
401239-4 – 520 Nova
401251-2 – 560 Nova

ITEM	QTY.	PART NO.	DESCRIPTION
1	4	258275-1	HOSE, 3/4-2WB X 575LOA - 12 JIC F-SW X 12 ORB M
2	1	258278	HOSE, 1/2-2WB X 539LOA-06 JIC F-SW X 1/2 NPT M
3	2	258279	HOSE, CASE DRAIN - G102R-06 X 36LOA - 06 JIC F-SW
4	2	258005	EL, 90D - 06 JIC M X 06 JIC F-SW
5	1	258048	CONNECTOR, 1/2 NPT M X 06 JIC M
6	1	258073	COUPLER, FEMALE - NON-VALVED - 1/2 NPT F
7	1	258024	TEE, 06 JIC M X 06 JIC M X 06 JIC M
8	4	258084	CONNECTOR - 12 JIC F X 08 JIC M
9	2	258002	EL, 90D - 06 JIC M X 06 ORB M
10	4	258003	EL, 90D - 12 JIC M X 10 ORB M
11	4	258033	TEE, 12 JIC F-SW X 12 JIC M X 12 JIC M - RUN
12	4	257987	EL, 90D - 12 JIC M X 12 JIC F-SW
13	2	258052	CONNECTOR, 12 ORB M X 12 JIC M
14	2	257996	CONNECTOR, 12 ORB M X 12 JIC F-SW
15	4	258652	TEE, 12 JIC M X 12 JIC F-SW X 04 ORB F
A	2	258089	VALVE, CHECK - INLINE - 06 JIC M X F - VONBERG - 1906MF-03
B	4	257970	COUPLER, MALE - STUCCHI - 12 ORB F
C	2	258092	GAUGE, PRESSURE - SPG-1500P 04 ORB M
D	2	258093	GAUGE, PRESSURE - SPG-3000P 04 ORB M
E	2	258087	VALVE, CHECK - 12 ORB F
401253-2 (Substitute Items Below)			
ITEM	QTY.	PART NO.	DESCRIPTION
1	4	258343-1	HOSE, 3/4-2WB X 623LOA - 12 JIC F-SW X 12 ORB M
2	1	258345	HOSE, 1/2-2WB X 58LOA-06 JIC F-SW X 06 JIC F-SW
401239-4 (Substitute Items Below)			
ITEM	QTY.	PART NO.	DESCRIPTION
1	4	258246-1	HOSE, 3/4-2WB X 488LOA - 12 JIC F-SW X 12 ORB M
2	1	258247	HOSE, 1/2-2WB X 452LOA-06 JIC F-SW X 06 JIC F-SW
401251-2 (Substitute Items Below)			
ITEM	QTY.	PART NO.	DESCRIPTION
1	4	258344-1	HOSE, 3/4-2WB X 536LOA - 12 JIC F-SW X 12 ORB M
2	1	258346	HOSE, 1/2-2WB X 500LOA-06 JIC F-SW X 06 JIC F-SW

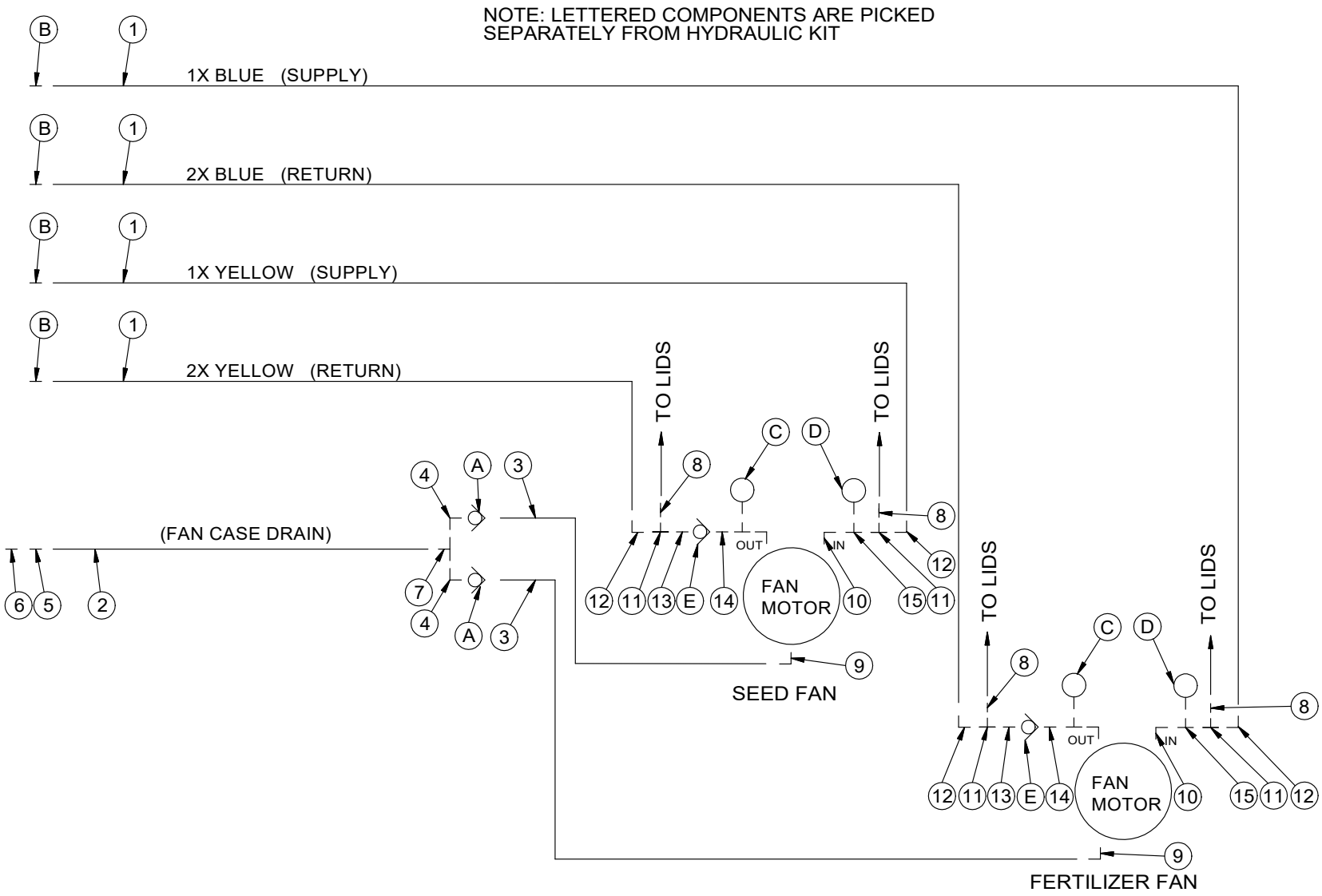
NOTE: LETTERED COMPONENTS ARE PICKED
SEPARATELY FROM HYDRAULIC KIT
1X BLUE (SUPPLY)
2X BLUE (RETURN)
1X YELLOW (SUPPLY)
2X YELLOW (RETURN)
(FAN CASE DRAIN)
TO LIDS
TO LIDS
TO LIDS
TO LIDS
OUT
IN
FAN MOTOR
SEED FAN
OUT
IN
FAN MOTOR
FERTILIZER FAN

Parts Description:

Hydraulic Schematic Single Fan

Part Number: 401236-5 – 780 Nova
401252-2 – 820 Nova
401238-4 – 520 Nova
401250-2 – 560 Nova

ITEM	QTY.	PART NO.	DESCRIPTION
1	2	258275-1	HOSE, 3/4-2WB X 575LOA - 12 JIC F-SW X 12 ORB M
2	1	258278	HOSE, 1/2-2WB X 539LOA-06 JIC F-SW X 1/2 NPT M
3	1	258279	HOSE, CASE DRAIN - G102R-06 X 36LOA - 06 JIC F-SW
4	1	258048	CONNECTOR, 1/2 NPT M X 06 JIC M
5	1	258073	COUPLER, FEMALE - NON-VALVED - 1/2 NPT F
6	1	258063	UNION, 06 JIC M X 06 JIC M
7	1	258002	EL, 90D - 06 JIC M X 06 ORB M
8	2	258003	EL, 90D - 12 JIC M X 10 ORB M
9	2	258033	TEE, 12 JIC F-SW X 12 JIC M X 12 JIC M - RUN
10	2	258084	CONNECTOR - 12 JIC F X 08 JIC M
11	2	257987	EL, 90D - 12 JIC M X 12 JIC F-SW
12	1	258052	CONNECTOR, 12 ORB M X 12 JIC M
13	1	257996	CONNECTOR, 12 ORB M X 12 JIC F-SW
14	2	258652	TEE, 12 JIC M X 12 JIC F-SW X 04 ORB F
A	2	257970	COUPLER, MALE - STUCCHI - 12 ORB F
B	1	258089	VALVE, CHECK - INLINE - 06 JIC M X F - VONBERG - 1906MF-03
C	1	258094	GAUGE, PRESSURE - SPG-1500P 04 ORB M
D	1	258095	GAUGE, PRESSURE - SPG-3000P 04 ORB M
E	1	258087	VALVE, CHECK - 12 ORB F
401252-1 (Substitute Items Below)			
ITEM	QTY.	PART NO.	DESCRIPTION
1	2	258343-1	HOSE, 3/4-2WB X 623LOA - 12 JIC F-SW X 12 ORB M
2	1	258345	HOSE, 1/2-2WB X 58LOA-06 JIC F-SW X 06 JIC F-SW
401238-3 (Substitute Items Below)			
ITEM	QTY.	PART NO.	DESCRIPTION
1	2	258246-1	HOSE, 3/4-2WB X 488LOA - 12 JIC F-SW X 12 ORB M
2	1	258247	HOSE, 1/2-2WB X 452LOA-06 JIC F-SW X 06 JIC F-SW
401250-1 (Substitute Items Below)			
ITEM	QTY.	PART NO.	DESCRIPTION
1	2	258344-1	HOSE, 3/4-2WB X 536LOA - 12 JIC F-SW X 12 ORB M
2	1	258346	HOSE, 1/2-2WB X 500LOA-06 JIC F-SW X 06 JIC F-SW

NOTE: LETTERED COMPONENTS ARE PICKED
SEPARATELY FROM HYDRAULIC KIT

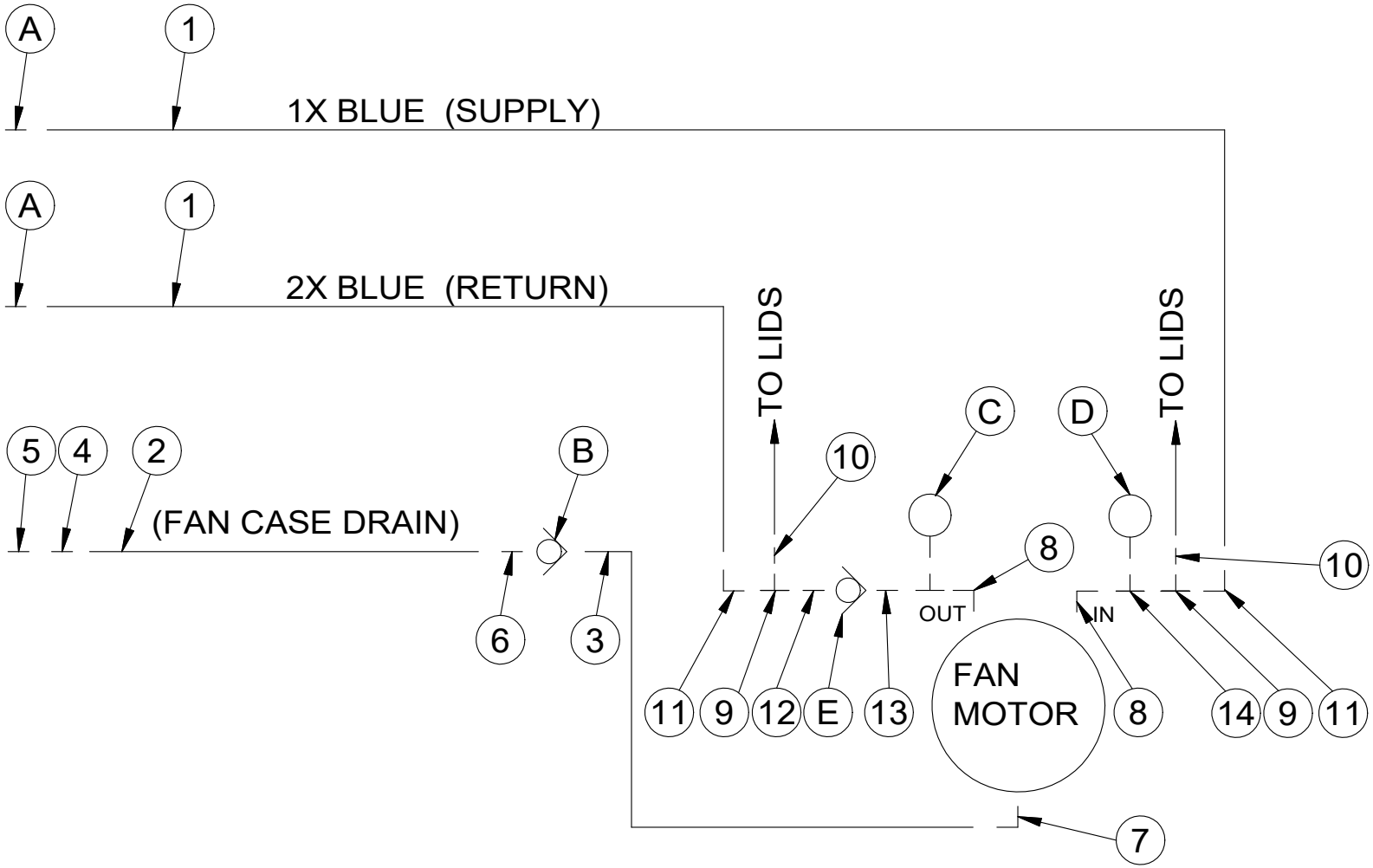

Parts Description:

Hydraulic Schematic Dual Fans - T/B Nova

Part Number: 401244-2

ITEM	QTY.	PART NO.	DESCRIPTION
1	2	401078	ASSY, HOSE - 3/4-2WB X 288 LOA - C/W FITTINGS
2	1	258116	HOSE, 3/8-2WB X 58LOA - 06JIC F-SW X 06JIC F-SW
3	2	258279	HOSE, CASE DRAIN - G102R-06 X 36LOA - 06 JIC F-SW
4	2	258005	EL, 90D - 06 JIC M X 06 JIC F-SW
5	1	258048	CONNECTOR, 1/2 NPT M X 06 JIC M
6	1	258073	COUPLER, FEMALE - NON-VALVED - 1/2 NPT F
7	1	258024	TEE, 06 JIC M X 06 JIC M X 06 JIC M
8	1	258049	CONNECTOR, 08 JIC F X 06 JIC M
9	2	258002	EL, 90D - 06 JIC M X 06 ORB M
10	4	258003	EL, 90D - 12 JIC M X 10 ORB M
11	1	258028	TEE, 08 JIC M X M X M
12	1	401270	ASSY, HOSE - 1/2-2WB X 236LOA - C/W FITTINGS
13	4	258084	CONNECTOR - 12 JIC F X 08 JIC M
14	4	257987	EL, 90D - 12 JIC M X 12 JIC F-SW
15	4	258038	CONNECTOR, 06 JIC F-SW X 1/4 NPT F
16	4	257989	CONNECTOR, 12 JIC F X 06 JIC M
17	8	258033	TEE, 12 JIC F-SW X 12 JIC M X 12 JIC M - RUN
18	2	257996	CONNECTOR, 12 ORB M X 12 JIC F-SW
19	2	258052	TERMINAL, FEMALE - WAYTEK WEATHER PACK - 16-14GA
20	2	401074	ASSY, HOSE - 3/4-2WB X 328 LOA - C/W FITTINGS
A	2	258089	VALVE, CHECK - INLINE - 06 JIC M X F - VONBERG - 1906MF-03
B	2	258092	GAUGE, PRESSURE - SPG-63-1500P-S-U - GLYCERINE FILLED
C	2	258095	GAUGE, PRESSURE - SPG-3000P 1/4 NPT
D	2	258087	VALVE, CHECK - 12 ORB F

NOTE: LETTERED COMPONENTS ARE
PICKED SEPARATELY FROM HYDRAULIC KIT

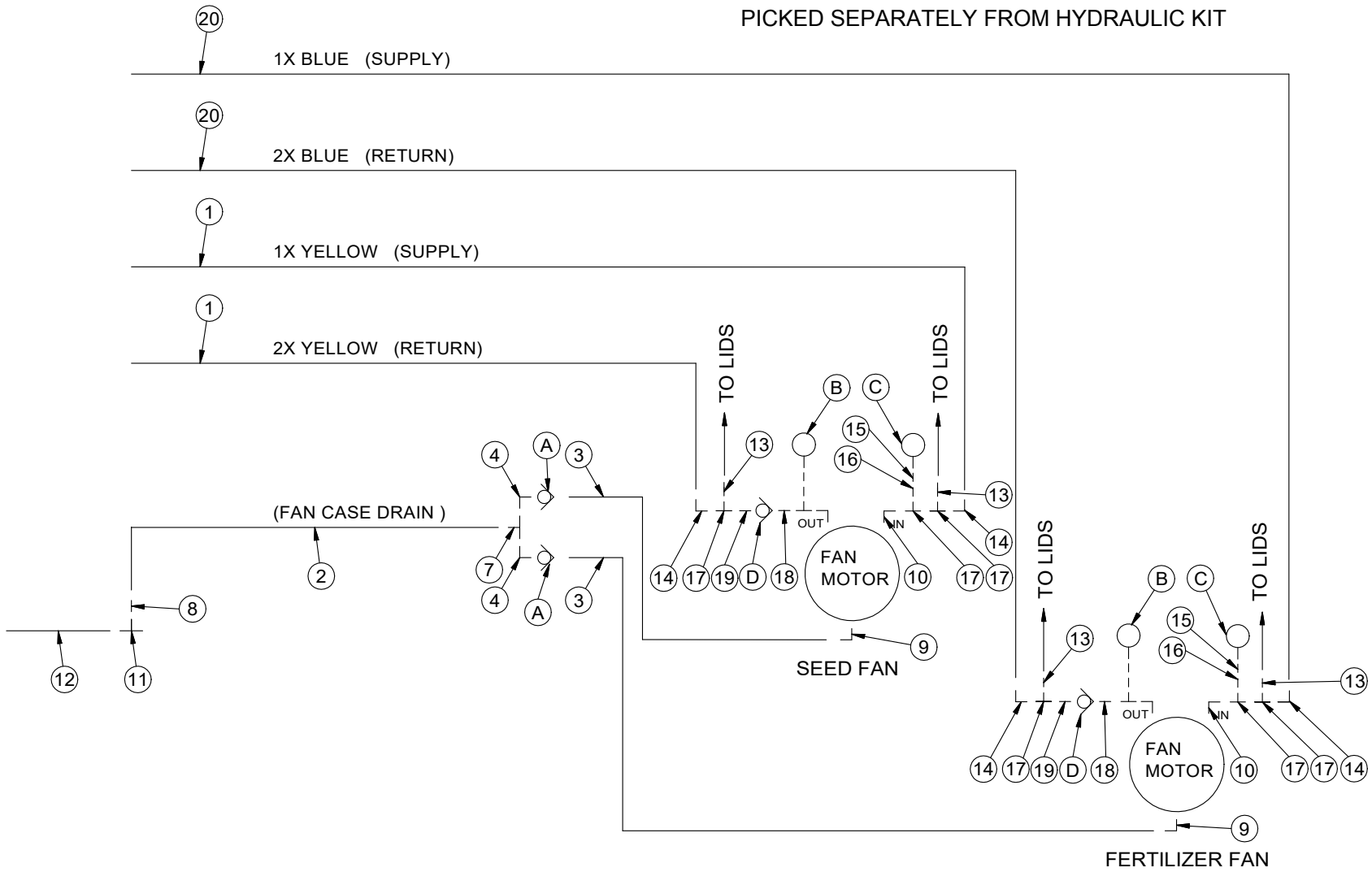

Parts Description:

Hydraulic Schematic Single Fan - T/B Nova

Part Number: 401245-3

ITEM	QTY.	PART NO.	DESCRIPTION
1	2	401078	ASSY, HOSE - 3/4-2WB X 288 LOA - C/W FITTINGS
2	1	258116	HOSE, 3/8-2WB X 58 LOA - 06JIC F-SW X 06 JIC F-SW
3	1	258279	HOSE, CASE DRAIN - G102R-06X 36LOA-06 JIC F-SW
4	1	258049	CONNECTOR, 08 JIC F X 06 JIC M
5	1	258028	TEE, 08 JIC M X M X M
6	1	258063	UNION, 06 JIC M X 06 JIC M
7	1	258002	EL, 90D - 06 JIC M X 06 ORB M
8	2	258003	EL, 90D - 12 JIC M X 10 ORB M
9	2	258084	CONNECTOR - 12 JIC F-SW X 08 JIC M
10	1	401270	ASSY, HOSE - 1/2-2WB X 236LOA - C/W FITTINGS
11	2	257987	EL, 90D - 12 JIC M X 12 JIC F-SW
12	1	258052	CONNECTOR, 12 ORB M X 12 JIC M
13	1	257996	CONNECTOR, 12 ORB M X 12 JIC F-SW
14	2	258038	CONNECTOR, 06 JIC F-SW X 1/4 NPT F
15	2	257989	CONNECTOR, 12 JIC F X 06 JIC M
16	2	258033	TEE, 12 JIC F-SW X 12 JIC M X 12 JIC M - RUN
17	2	258652	TEE, 12 JIC F-SW X 12 JIC M X 12 JIC M X 04 ORB F
A	1	258089	VALVE, CHECK - INLINE - 06 JIC M X F - VONBERG
B	1	258094	GAUGE, PRESSURE - SPG-1500P 1/4 NPT
C	1	258095	GAUGE, PRESSURE - SPG-3000P 1/4 NPT
D	1	258087	VALVE, CHECK - 12 ORB F

NOTE: LETTERED COMPONENTS ARE PICKED
SEPARATELY FROM HYDRAULIC KIT

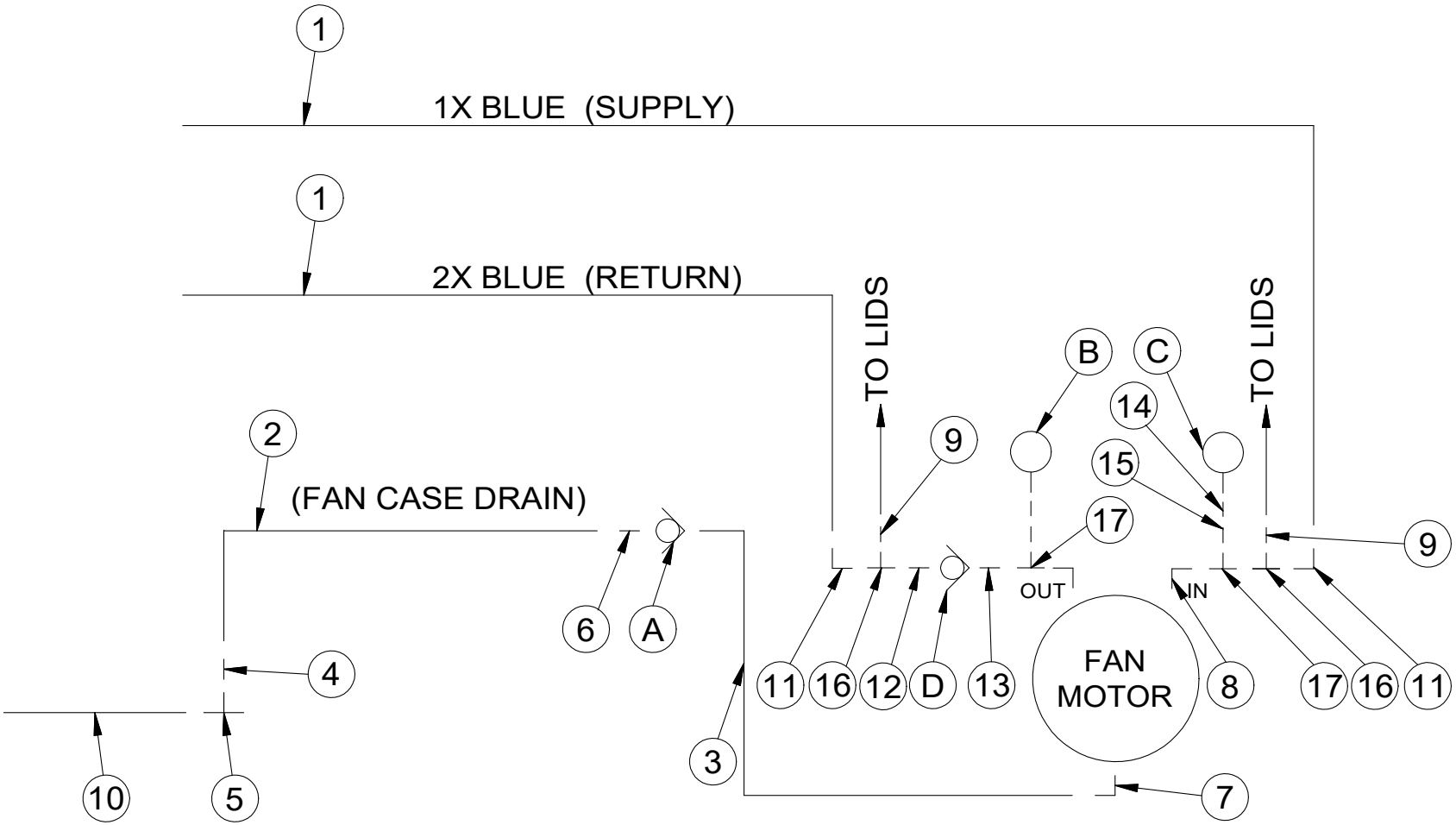

Parts Description:

Hydraulic Schematic Long Conveyor 780/820 Nova

Part Number: 401081-4

ITEM	PART NO.	QTY.	DESCRIPTION
1	258287-1	2	HOSE, 3/4-2WB X 244 LOA - 12 JIC F-SW X 12 JIC-F-SW
2	258288-3	1	HOSE, 3/4-2WB X 228 LOA - 12 JIC F-SW X 12 JIC-F-SW
3	258574	1	HOSE, 3/4-2WB X 52 LOA - 12 JIC F-SW X 12 JIC-F-SW
4	258376	1	HOSE, 3/4-2WB X 24 LOA - 12 JIC M X 12 JIC- F- SW
5	258573-1	1	HOSE, 3/4-2WB X 270 LOA - 12 JIC F-SW X 12 JIC-F-SW
6	258296-2	1	HOSE, 1/4-2WB X 210 LOA - 06 JIC F-SW X 06 JIC F- SW
7	258571	2	HOSE, 1/4-2WB X 210 LOA - 06 JIC M X 06 JIC F-SW
8	258570	1	HOSE, 3/4-2WB X 226 LOA - 12 JIC M X 12 JIC- F- SW
9	258427	1	HOSE, 3/4-112-12 X 402 LOA - 12 JIC F-SW X 12 JIC- F- SW
10	258576	1	HOSE, 3/4-112-12 X 210 LOA - 12 JIC F-SW X 12 JIC- F- SW
11	258377-1	2	HOSE, 1/4-2WB X 45 LOA - 06 JIC F-SW X 06 JIC F- SW
12	258423	1	HOSE, 1/4-2WB X 54 LOA - 06 JIC F-SW X 06 JIC F- SW
13	258424	1	HOSE, 1/4-2WB X 79 LOA - 06 JIC F-SW X 06 JIC F- SW
14	258572-1	1	HOSE, 1/4-2WB X 150 LOA - 06 JIC F-SW X 06 JIC F- SW
15	258575-1	1	HOSE, 1/4-2WB X 174 LOA - 06 JIC F-SW X 06 JIC F- SW
16	258378-1	4	HOSE, 1/4-2WB X 272 LOA - 06 JIC F-SW X 06 JIC F- SW
17	258425	1	HOSE, 1/4-2WB X 30 LOA - 06 JIC M X 06 JIC- F- SW
18	258428	1	HOSE, 1/4-2WB X 23 LOA - 06 JIC M X 06 JIC- F- SW
19	257989	3	CONNECTOR, 12 JIC F X 06 JIC M
20	257992	3	CONNECTOR, 10 ORB M X 06 JIC M
21	257996	2	CONNECTOR, 12 ORB M X 12 JIC F-SW
22	258002	6	EL, 90D - 06 JIC M X 06 ORB M
23	258005	8	EL, 90D - 06 JIC M X 06 JIC F-SW
24	258012	1	EL, 90D - 12 JIC M X 12 ORB M
25	258018	3	TEE, 12 JIC M X 12 JIC M X 12 JIC M
26	257986	2	CONNECTOR, 06 JIC M X 06 JIC F - .020 ORIFICE
27	258033	2	TEE, 12 JIC F-SW X 12 JIC M X 12 JIC M - RUN
28	258052	3	CONNECTOR, 12 ORB M X 12 JIC M
29	258053	6	CONNECTOR, 08 ORB M X 06 JIC M
30	258004	1	EL, 90D - 06 JIC M X 04 ORB M
31	258058	1	CONNECTOR, 10 ORB M X 08 JIC M
32	258049	3	CONNECTOR, 08 JIC F X 06 JIC M
33	257976	4	CONNECTOR, 06 JIC M X 06 JIC F - .031 ORIFICE
34	257988	4	CONNECTOR, 10 ORB M X 12 JIC M
35	257987	7	EL, 90D - 12 JIC M X 12 JIC F-SW
A	258380	2	SWIVEL, 12 JIC M X 12 JIC F
B	258381	4	SWIVEL, 06 JIC M X 06 JIC F
C	258506	1	MANIFOLD, HYD - 4 VALVE D03 - CONVEYOR CONTROL
D	258501	2	VALVE, CHECK-POPPET - 1908F-08-0.098" - VONBERG
E	257350	1	VALVE, BALL - 12 ORB F X 12 ORB F - C/W HANDLE
F	258087	1	VALVE, CHECK - 12 ORB F
G	258510	2	CYL, HYD 3 X 24 IN - WING LIFT
H	258550	1	CYL, HYD 2 1/2 X 8 IN - ACTIVE WING/SMART HITCH
I	258509	1	VALVE, CONVEYOR BELT ON/OFF CONTROL

NOTE: LETTERED COMPONENTS ARE PICKED SEPERATELY FROM HYDRAULIC KIT

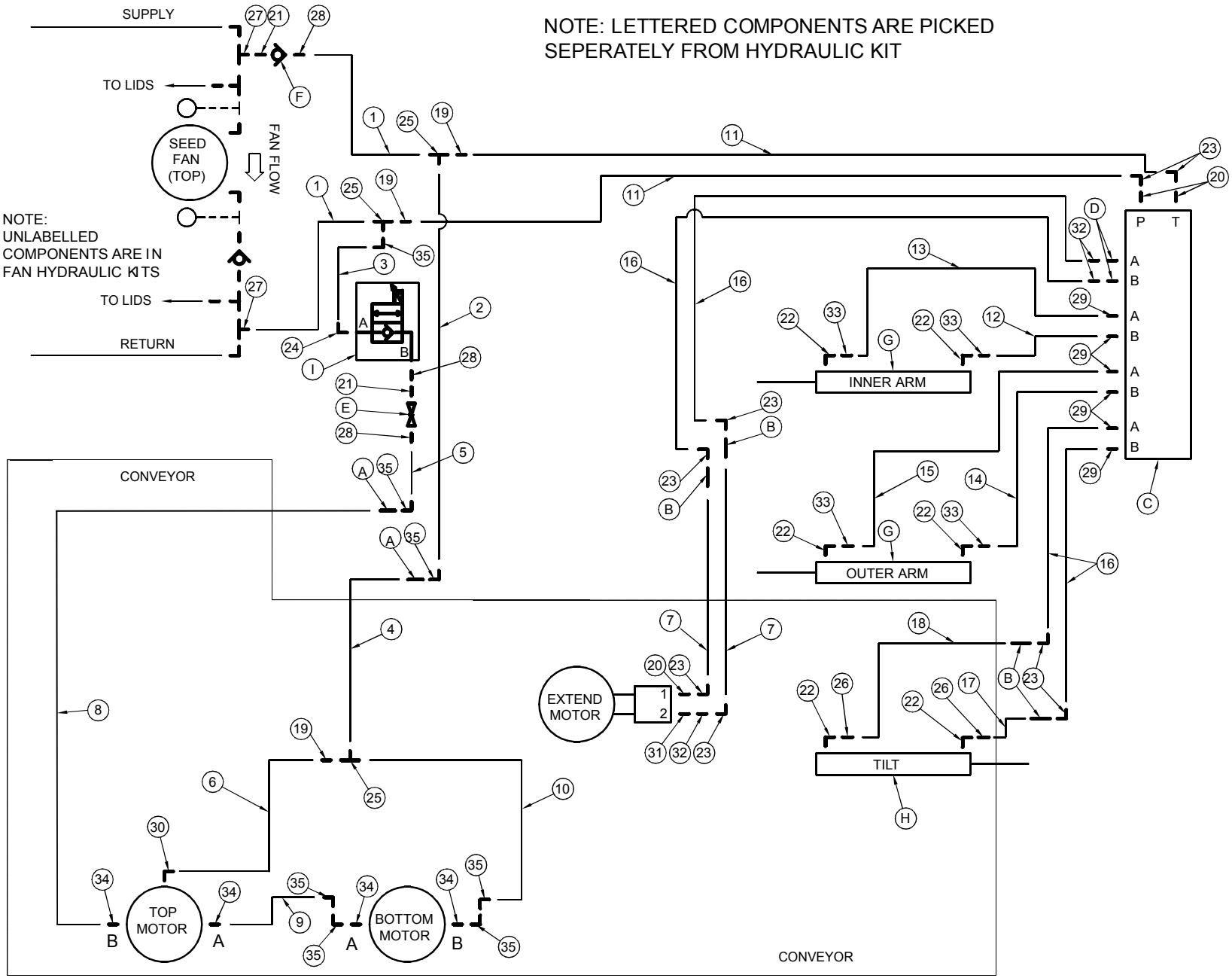

Parts Description:

Hydraulic Schematic Short Conveyor 520/560/630 Nova

Part Number: 401059-1

ITEM	PART NO.	QTY.	DESCRIPTION
1	258287-1	2	HOSE, 3/4-2WB X 244 LOA - 12 JIC F-SW X 12 JIC-F-SW
2	258291-2	1	HOSE, 3/4-2WB X 178 LOA - 12 JIC F-SW X 12 JIC-F-SW
3	258574	1	HOSE, 3/4-2WB X 52 LOA - 12 JIC F-SW X 12 JIC-F-SW
4	258376	1	HOSE, 3/4-2WB X 24 LOA - 12 JIC M X 12 JIC- F- SW
5	258598	1	HOSE, 3/4-2WB X 220 LOA - 12 JIC F-SW X 12 JIC-F-SW
6	258319-1	1	HOSE, 1/4-2WB X 186 LOA - 06 JIC F-SW X 06 JIC F- SW
7	258599	2	HOSE, 1/4-2WB X 194 LOA - 06 JIC M X 06 JIC F-SW
8	258370-2	1	HOSE, 3/4-2WB X 190 LOA - 12 JIC M X 12 JIC- F- SW
9	258433	1	HOSE, 3/4-112-12 X 366 LOA - 12 JIC F-SW X 12 JIC- F- SW
10	258426-1	1	HOSE, 3/4-112-12 X 194 LOA - 12 JIC F-SW X 12 JIC- F- SW
11	258620	2	HOSE, 1/4-2WB X 56 LOA - 06 JIC F-SW X 06 JIC F- SW
12	258423	1	HOSE, 1/4-2WB X 54 LOA - 06 JIC F-SW X 06 JIC F- SW
13	258424	1	HOSE, 1/4-2WB X 79 LOA - 06 JIC F-SW X 06 JIC F- SW
14	258434	1	HOSE, 1/4-2WB X 136 LOA - 06 JIC F-SW X 06 JIC F- SW
15	258435	1	HOSE, 1/4-2WB X 160 LOA - 06 JIC F-SW X 06 JIC F- SW
16	258436-1	4	HOSE, 1/4-2WB X 222 LOA - 06 JIC F-SW X 06 JIC F- SW
17	258437	1	HOSE, 1/4-2WB X 26 LOA - 06 JIC M X 06 JIC- F- SW
18	258438	1	HOSE, 1/4-2WB X 18 LOA - 06 JIC M X 06 JIC- F- SW
19	257989	3	CONNECTOR, 12 JIC F X 06 JIC M
20	257992	3	CONNECTOR, 10 ORB M X 06 JIC M
21	257996	2	CONNECTOR, 12 ORB M X 12 JIC F-SW
22	258002	6	EL, 90D - 06 JIC M X 06 ORB M
23	258005	8	EL, 90D - 06 JIC M X 06 JIC F-SW
24	258012	1	EL, 90D - 12 JIC M X 12 ORB M
25	258018	3	TEE, 12 JIC M X 12 JIC M X 12 JIC M
26	257986	2	CONNECTOR, 06 JIC M X 06 JIC F - .020 ORIFICE
27	258033	2	TEE, 12 JIC F-SW X 12 JIC M X 12 JIC M - RUN
28	258052	3	CONNECTOR, 12 ORB M X 12 JIC M
29	258053	6	CONNECTOR, 08 ORB M X 06 JIC M
30	258004	1	EL, 90D - 06 JIC M X 04 ORB M
31	258058	1	CONNECTOR, 10 ORB M X 08 JIC M
32	258049	3	CONNECTOR, 08 JIC F X 06 JIC M
33	257976	4	CONNECTOR, 06 JIC M X 06 JIC F - .031 ORIFICE
34	257988	4	CONNECTOR, 10 ORB M X 12 JIC M
35	257987	7	EL, 90D - 12 JIC M X 12 JIC F-SW
A	258380	2	SWIVEL, 12 JIC M X 12 JIC F
B	258381	4	SWIVEL, 06 JIC M X 06 JIC F
C	258506	1	MANIFOLD, HYD - 4 VALVE D03 - CONVEYOR CONTROL
D	258501	2	VALVE, CHECK-POPPET - 1908F-08-0.098" - VONBERG
E	257350	1	VALVE, BALL - 12 ORB F X 12 ORB F - C/W HANDLE
F	258087	1	VALVE, CHECK - 12 ORB F
G	258510	2	CYL, HYD 3 X 24 IN - WING LIFT
H	258550	1	CYL, HYD 2 1/2 X 8 IN - ACTIVE WING/SMART HITCH
I	258509	1	VALVE, CONVEYOR BELT ON/OFF CONTROL

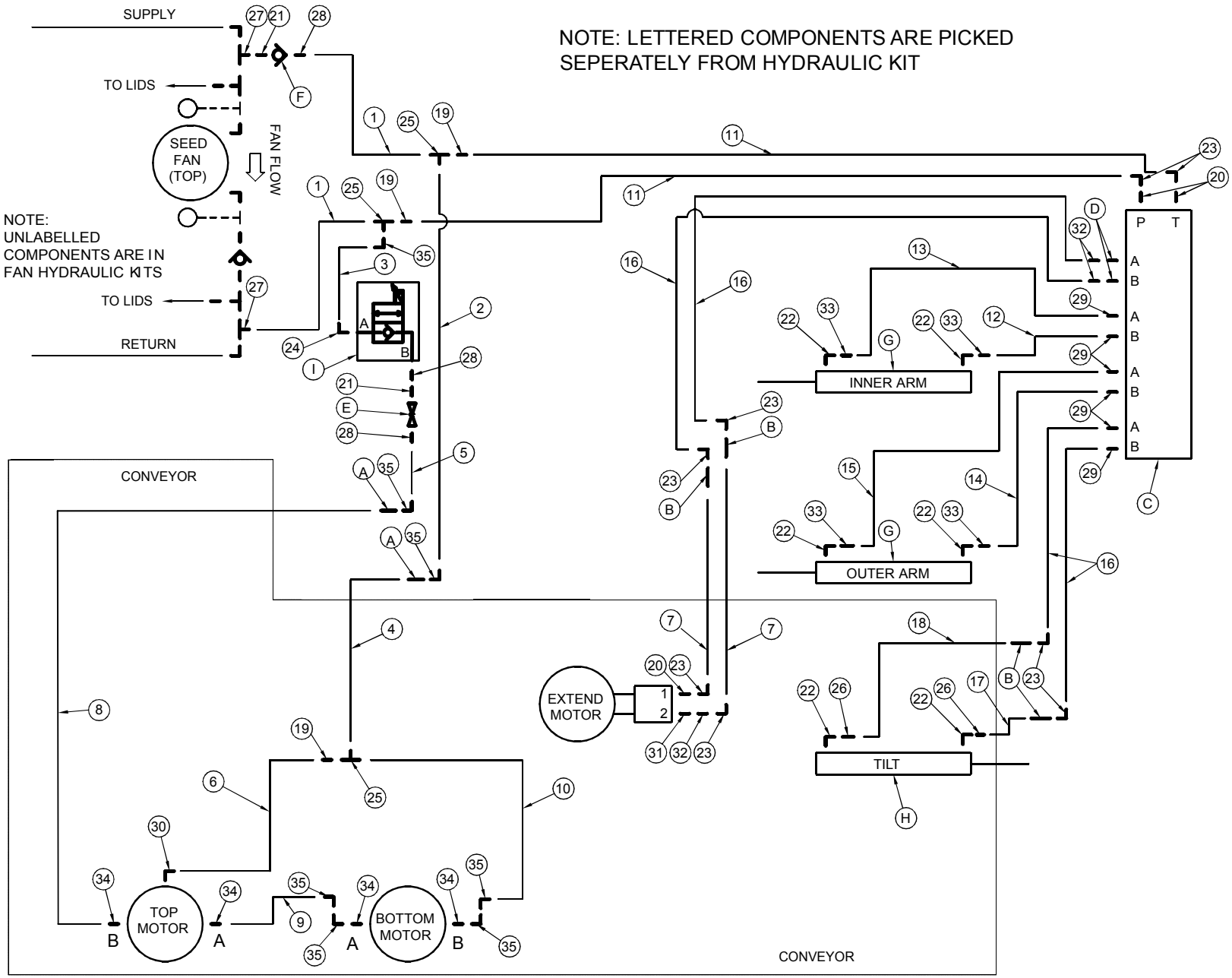
NOTE: LETTERED COMPONENTS ARE PICKED SEPERATELY FROM HYDRAULIC KIT
SUPPLY
TO LIDS
SEED FAN (TOP)
FAN FLOW
NOTE: UNLABELLED COMPONENTS ARE IN FAN HYDRAULIC KITS
TO LIDS
RETURN
CONVEYOR
INNER ARM
OUTER ARM
EXTEND MOTOR
TILT
TOP MOTOR
BOTTOM MOTOR
CONVEYOR
P
T
A
B

Parts Description:

Hydraulic Schematic
Transport Latch - Long Conveyor

Part Number: 401278-2

ITEM	QTY.	PART NO	DESCRIPTION
1	3	258582	HOSE, 1/4-2WB X 145 LOA - 06 JIC F-SW X 06 JIC F-SW
2	1	258581	HOSE, 1/4-2WB X 156 LOA - 06 JIC F-SW X 06 JIC F-SW
3	1	258583	HOSE, 1/4-2WB X 22 LOA - 06 JIC F-SW X 06 JIC F-SW
4	2	257998	CONNECTOR, 08 ORBM X 06 JIC M - .020 ORIFICE
5	2	258053	CONNECTOR, 08 ORB M X 06 JIC M
6	5	258025	TEE, 06 JIC F-SW X 06 JIC M X 06 JIC M - RUN
7	4	258005	EL, 90D - 06 JIC M X 06 JIC F-SW
8	1	258059	CONNECTOR, 06 ORB M X 06 JIC F-SW
9	1	258051	CONNECTOR, 06 ORB M X 06 JIC M
10	1	257975	CONNECTOR, 04 ORB M X 06 JIC M
A	1	258503	VALVE, PILOT OPERATED CHECK - CKBBXEN-JCI
B	2	258551	CYL, HYD 2 X 4 IN - FILL AUGER

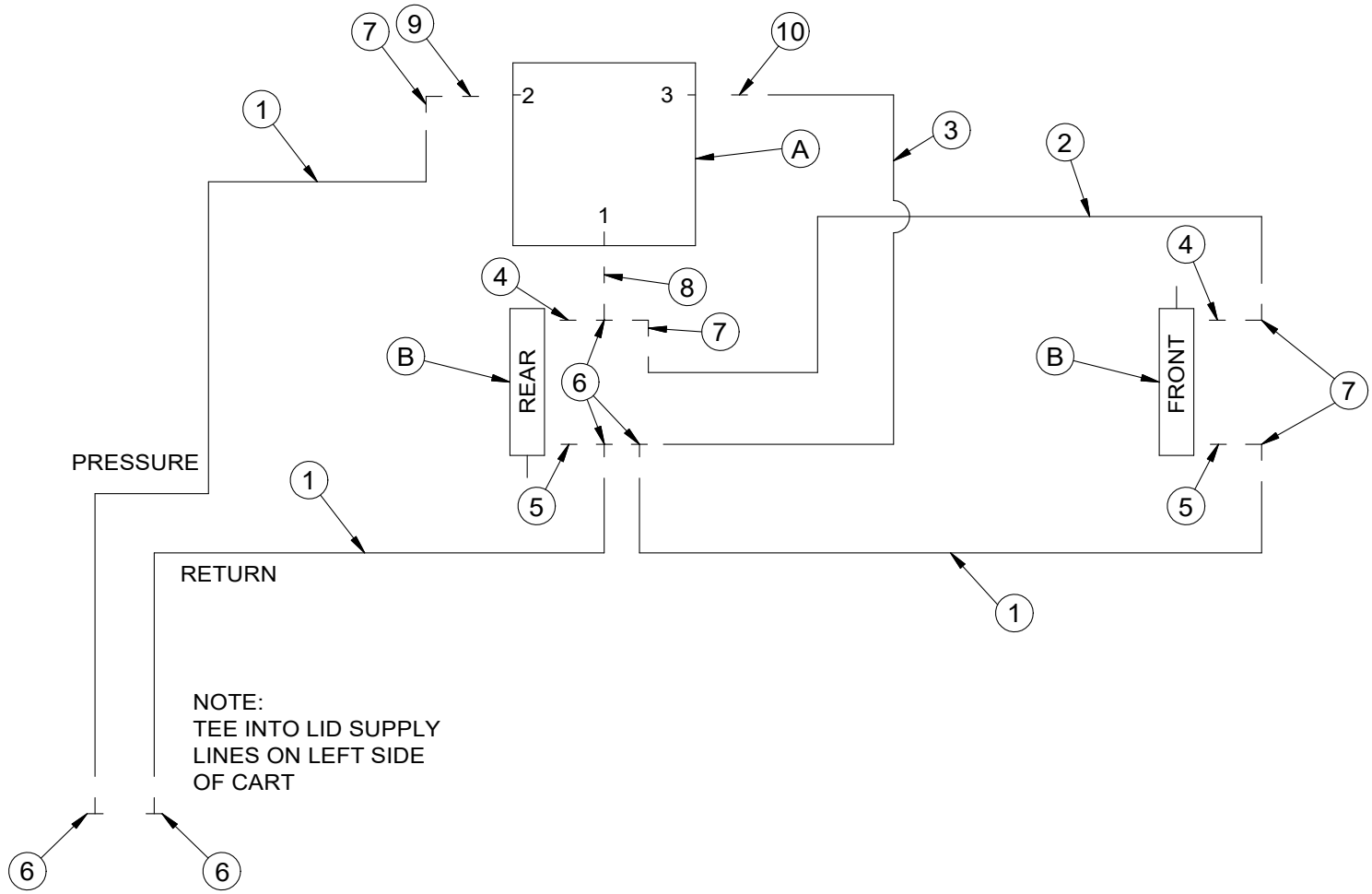

Parts Description:

Hydraulic Schematic
Transport Latch - Short Conveyor

Part Number: 401285 - Nova 520/560 BU

401285 - CTN, HYD - TRANSPORT LATCH - SHORT CONVEYOR - NOVA - 520/560 BU			
ITEM	QTY.	PART NO.	DESCRIPTION
1	1	258592	HOSE, 1/4-2WB X 185 LOA - 06 JIC F-SW X 06 JIC F-SW
2	1	258593	HOSE, 1/4-2WB X 181 LOA - 06 JIC F-SW X 06 JIC F-SW
3	1	258594	HOSE, 1/4-2WB X 111 LOA - 06 JIC F-SW X 06 JIC F-SW
4	1	258595	HOSE, 1/4-2WB X 100 LOA - 06 JIC F-SW X 06 JIC F-SW
5	1	258583	HOSE, 1/4-2WB X 22 LOA - 06 JIC F-SW X 06 JIC F-SW
6	2	257998	CONNECTOR, 08 ORBM X 06 JIC M - .020 ORIFICE
7	2	258053	CONNECTOR, 08 ORB M X 06 JIC M
8	5	258025	TEE, 06 JIC F-SW X 06 JIC M X 06 JIC M - RUN
9	4	258005	EL, 90D - 06 JIC M X 06 JIC F-SW
10	1	258059	CONNECTOR, 06 ORB M X 06 JIC F-SW
11	1	258051	CONNECTOR, 06 ORB M X 06 JIC M
12	1	257975	CONNECTOR, 04 ORB M X 06 JIC M
A	1	258503	VALVE, PILOT OPERATED CHECK - CKBBXEN-JCI
B	2	258551	CYL, HYD 2 X 4 IN - FILL AUGER

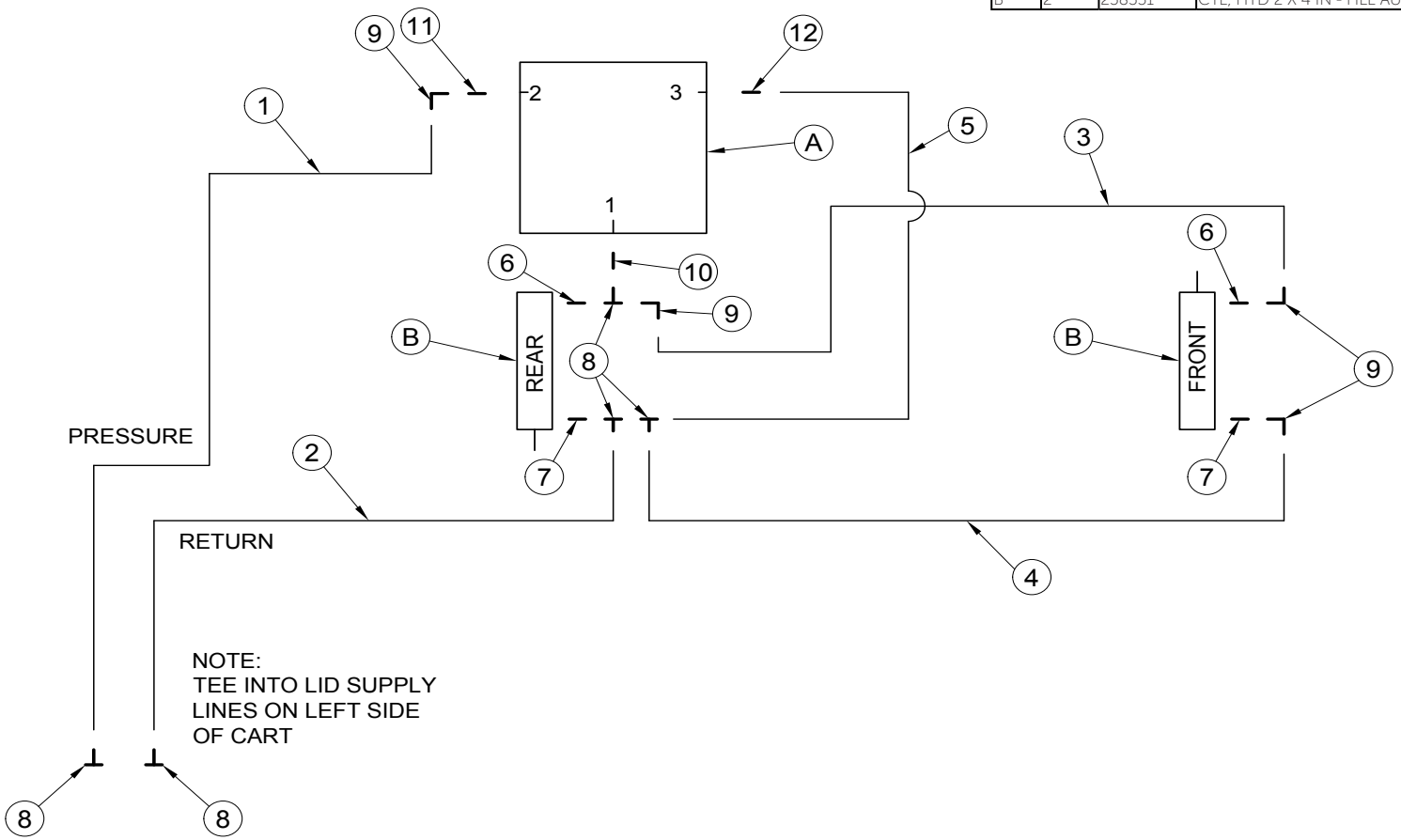

Parts Description:

Electrical Schematic
Clearance Lights

Part Number: 500323-4 – 780/820 Nova
500322-2 – 520/560 Nova

ITEM	QTY.	PART NO.	DESCRIPTION
1	1	257012	PLUG, CONNECTOR - 7 WAY - PLASTIC - WAYTEK
2	1	257014	CABLE GUARD SPRING - PLUG - WAYTEK
3	1	257216	TERMINAL BOX - 7.5 X 4.3 X 2.2" - BLK
4	1	257148	TERMINAL STRIP
5	2	257063	CONNECTOR, 3 PIN - TOWER HALF
6	10	257052	TERMIAL, FEMALE - WEATHER PACK
7	10	257069	SEAL, CABLE - WAYTEK
8	2	257083	STRAIN RELIEF - FLEX NUT - 1/2 NPT - WAYTEK
9	2	257084	STRAIN RELIEF - LOCK NUT - 1/2 NPT - WAYTEK
10	2	257085	STRAIN RELIEF - SEAL RING - 1/2 IN - WAYTEK
11	47'	257178	CABLE, 7 WIRE - 6/12 GA - 1/10 GA
12	18'	257036	CABLE, 4 WIRE - 14 GA - WT14
13	1	257184	STRAIN RELIEF - FLEX NUT - 3/4 NPT
14	1	257185	STRAIN RELIEF - LOCK NUT - 3/4 NPT
15	1	257186	STRAIN RELIEF - SEAL RING - 3/4 IN
16	2	257065	CONNECTOR, 2 PIN - TOWER HALF
17	2	250658	SCREW, TEK - 1/4 X 1 IN
18	7	222611	WASHER, LOCK - INTERNAL TOOTH - #10 - PL
19	7	222610	NUT, HEX - #10-24 - PL
20	1	257175	TERMINAL - RING - #10 - 12/10 GA
21	14	257157	TERMINAL - RING - #10 - 16/14 GA
11	40'	257178	CABLE, 7 WIRE - 6/12 GA - 1/10 GA (**500322-2**)

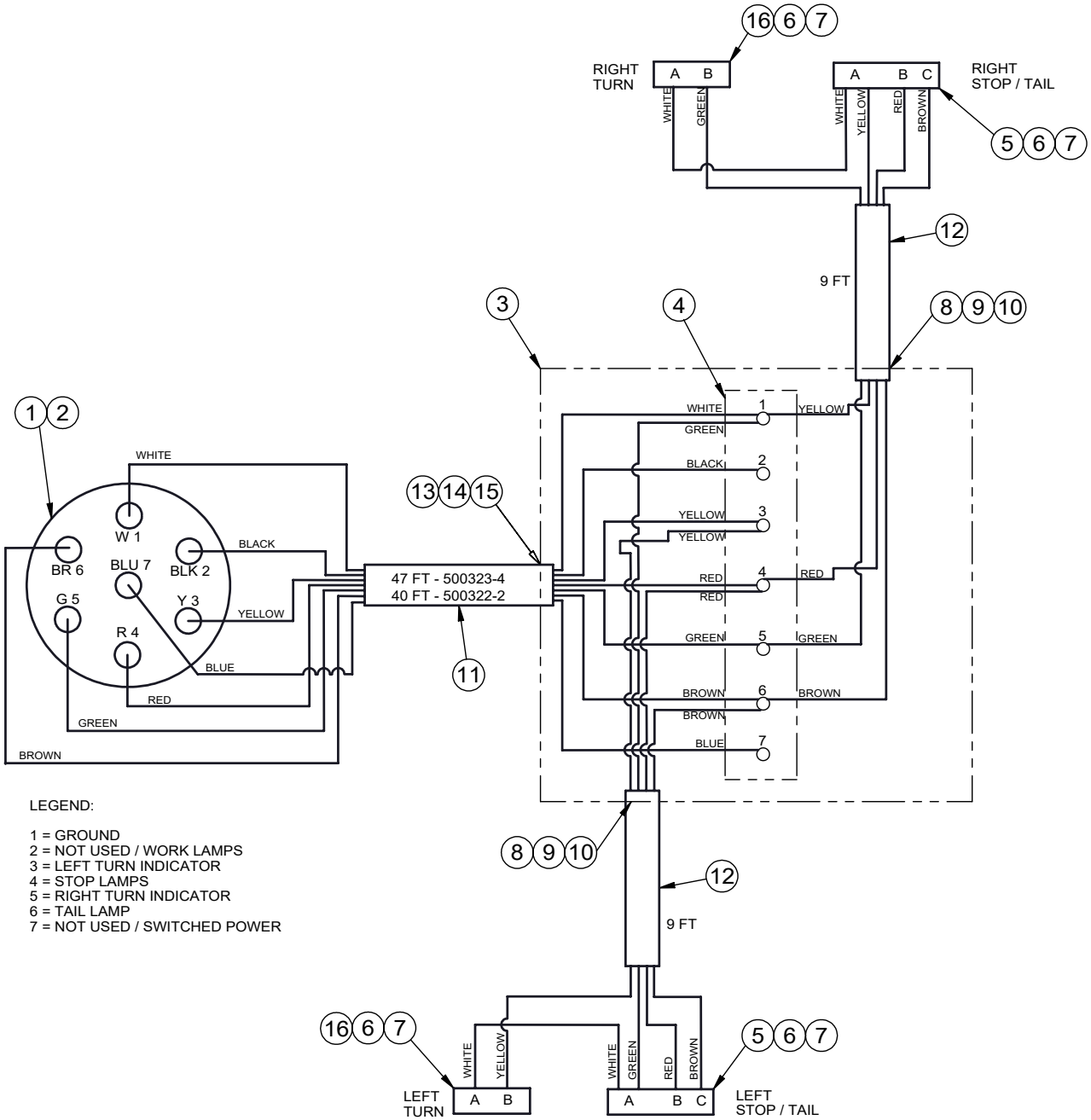
RIGHT TURN
A B
WHITE
GREEN
16 6 7
RIGHT STOP / TAIL
A B C
WHITE
YELLOW
RED
BROWN
5 6 7
12
9 FT
8 9 10
3
4
1 2
WHITE
W 1
BR 6
BLU 7
BLK 2
G 5
Y 3
R 4
BLACK
YELLOW
BLUE
RED
GREEN
BROWN
13 14 15
47 FT - 500323-4
40 FT - 500322-2
11
WHITE 1 YELLOW
GREEN
BLACK 2
YELLOW 3
YELLOW
RED 4 RED
RED
GREEN 5 GREEN
BROWN 6 BROWN
BROWN
BLUE 7
LEGEND:
1 = GROUND
2 = NOT USED / WORK LAMPS
3 = LEFT TURN INDICATOR
4 = STOP LAMPS
5 = RIGHT TURN INDICATOR
6 = TAIL LAMP
7 = NOT USED / SWITCHED POWER
8 9 10
12
9 FT
16 6 7
WHITE
YELLOW
LEFT TURN
A B
WHITE
GREEN
RED
BROWN
5 6 7
A B C
LEFT STOP / TAIL

Parts Description:

Electrical Schematic
Clearance Lights - T/B Nova

Part Number: 503051-3 - Std
503061-3 - TBW Nova 780

ITEM	QTY.	PART NO.	DESCRIPTION
1	1	257012	PLUG, CONNECTOR - 7 WAY - PLASTIC - WAYTEK
2	1	257014	CABLE GUARD SPRING - PLUG - WAYTEK
3	1	257216	TERMINAL BOX - 7.5 X 4.3 X 2.2" - BLK
4	1	257219	TERMINAL STRIP - 6 POLE
5	2	257063	CONNECTOR, 3 PIN - TOWER HALF
6	10	257052	TERMIAL, FEMALE - WEATHER PACK
7	10	257069	SEAL, CABLE - WAYTEK
8	1	257013	SOCKET, CONNECTOR - 7 WAY - PLASTIC - WAYTEK
9	1	257015	BOOT - SOCKET - WAYTEK
10	2	257083	STRAIN RELIEF - FLEX NUT - 1/2 NPT - WAYTEK
11	2	257084	STRAIN RELIEF - LOCK NUT - 1/2 NPT - WAYTEK
12	2	257085	STRAIN RELIEF - SEAL RING - 1/2 IN - WAYTEK
13	1	257016	BRACKET, MNT - 7 WAY SOCKET - BLACK - WAYTEK
14	38'	257178	CABLE, 7 WIRE - 456 IN - 6/12 GA - 1/10 GA
15	12'	257178	CABLE, 7 WIRE - 144 IN - 6/12 GA - 1/10 GA
16	18'	257036	CABLE, 4 WIRE - 14 GA - WT14
17	2	257184	STRAIN RELIEF - FLEX NUT - 3/4 NPT
18	2	257185	STRAIN RELIEF - LOCK NUT - 3/4 NPT
19	2	257186	STRAIN RELIEF - SEAL RING - 3/4 IN
20	2	257065	CONNECTOR, 2 PIN - TOWER HALF
21	2	250658	SCREW, TEK - 1/4 X 1 IN
22	7	222611	WASHER, LOCK - INTERNAL TOOTH - #10 - PL
23	7	222610	NUT, HEX - #10-24 - PL
24	2	257175	TERMINAL - RING - #10 - 12/10 GA
25	20	257157	TERMINAL - RING - #10 - 16/14 GA
26	1	257101	TERMINAL STRIP - 4 POLE - #10
27	8"	257267	HEAT SHRINK TUBE, DUAL WALL -3/4 IN-3:1-BLK
28	2'	257046	LOOM, SLT -.350 IN- FLAME RETARDANT - LFB-350-BLK
14	47'	257178	CABLE, 7 WIRE - 564 IN - 6/12 GA - 1/10 GA **(503061-3)**
15	7'	257178	CABLE, 7 WIRE - 84 IN - 6/12 GA - 1/10 GA **(503061-3)**

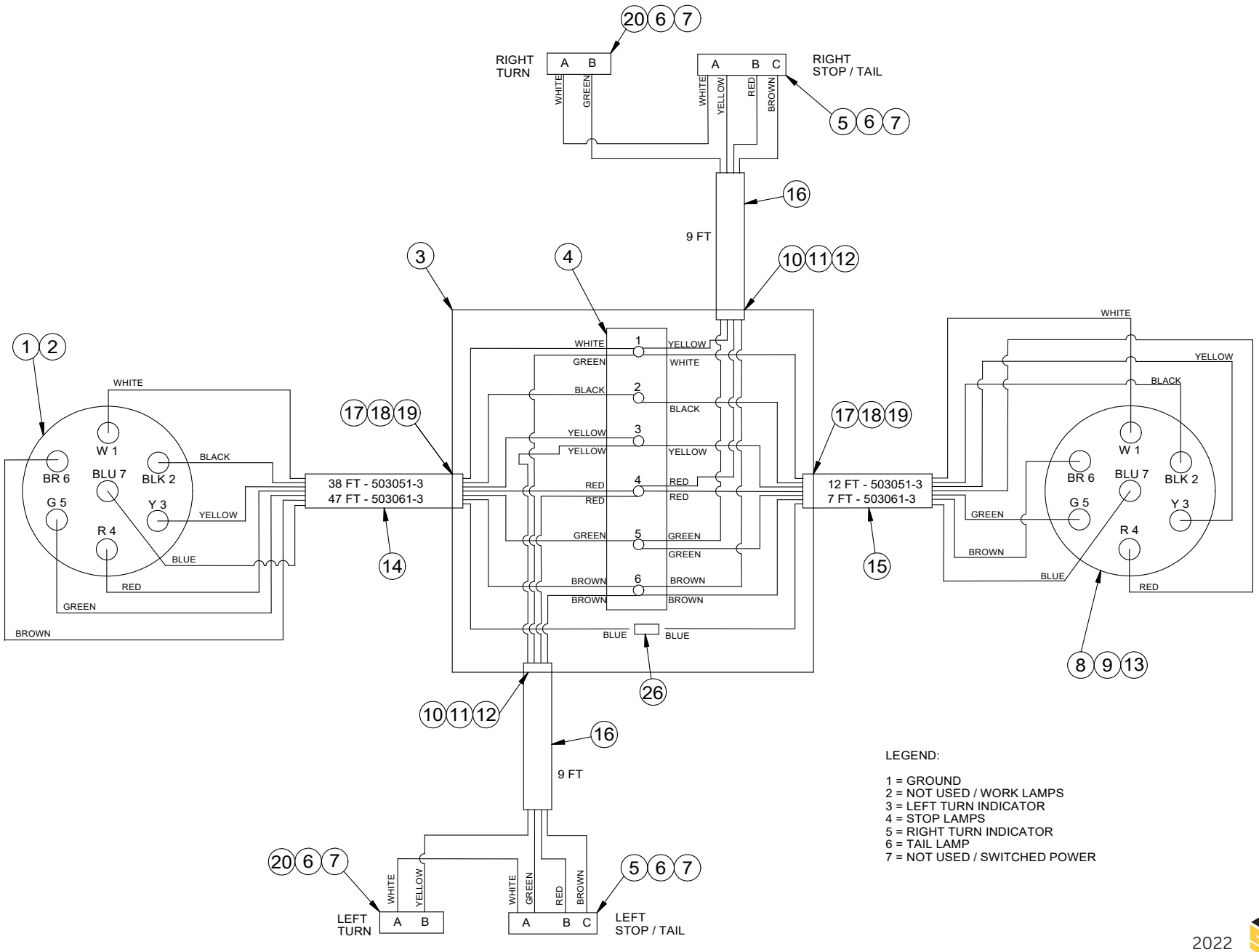

LEGEND:

1 = GROUND
2 = NOT USED / WORK LAMPS
3 = LEFT TURN INDICATOR
4 = STOP LAMPS
5 = RIGHT TURN INDICATOR
6 = TAIL LAMP
7 = NOT USED / SWITCHED POWER

Parts Description:

Electrical Schematic
Nova Work Lights

Part Number: 500324-3 – 630/780/820 Nova
500326-3 – 520/560 Nova
503056-2 – Tow Between Nova
500329-1 – 4000 Gal. Nova

ITEM	QTY.	PART NO.	DESCRIPTION
1	2	257086	CABLE, 2 WIRE - 1 FT - 2/16 GA
2	1	257086	CABLE, 2 WIRE - 33 FT - 2/16 GA
3	1	257086	CABLE, 2 WIRE - 19 FT - 2/16 GA
4	1	257086	CABLE, 2 WIRE - 10 FT - 2/16 GA
5	2	257090	SPLICE KIT - WAYTEK - 6 WAY TPA
6	2	257091	SPLICE KIT - WAYTEK - 6 CONTACT BODY
7	2	257092	SPLICE KIT - WAYTEK - CAP
8	2	257093	SPLICE KIT - WAYTEK - 6 GANG COMMON BAR
9	4	257094	SPLICE KIT - WAYTEK - CAVITY PLUG - GREEN
10	8	257095	SPLICE KIT - WAYTEK - SPLICE TERMINAL - FEMALE
11	22	257076	SEAL, CABLE - WAYTEK - GREY
12	5	257066	CONNECTOR, 2 PIN - SHROUD HALF - WAYTEK
13	2	257065	CONNECTOR, 2 PIN - TOWER HALF - WAYTEK
14	4	257052	TERMIAL, FEMALE - WAYTEK - 16-14 GA
15	10	257051	TERMIAL, MALE - WAYTEK - 16-14 GA
16	1	257086	CABLE, 2 WIRE - 11 FT - 2/16GA
17	1	257271	SWITCH, TOGGLE - SPDT ON-ON
18	2	257123	RECEPTACLE, CONNECTOR - DEUTSCH - 2 PIN
19	4	257127	TERMINAL, PIN - DEUTSCH - 16/14 GA
20	2	257133	RECEPTACLE, WEDGE - DEUTSCH - 2 PIN
21	1	257086	CABLE, 2 WIRE - 20.5 FT - 2/16 GA
22	1	257086	CABLE, 2 WIRE - 17 FT - 2/16 GA
23	1	256975	RELAY, AUTO, 5 PIN, SPDT, W/ MOUNTING HOLE
24	3	257056	CONNECTOR, SPADE, FEMALE, 16-14 AWG
25	2	256984	WIRE, 16 GA - BLACK - WX16-0
26		257077	TAPE, COLD SHRINK - 1 IN WIDE
27	1	256976	CONNECTOR, RELAY - 5 PIN
28	5	256977	TERMINAL, RELAY CONNECTOR
A	2	257140	LIGHT, LED SQUARE WORK LAMP - NOVA

NOTE : LETTERED COMPONENTS ARE PICKED SEPARATELY FROM WIRE HARNESS

EVERY WIRE SHOULD HAVE A CABLE SEAL ON IT (ITEM 11)

WHEN CONNECTING TO VIPER 4+ UNITS, CONNECT BLACK (+) TO '2' TERMINAL.

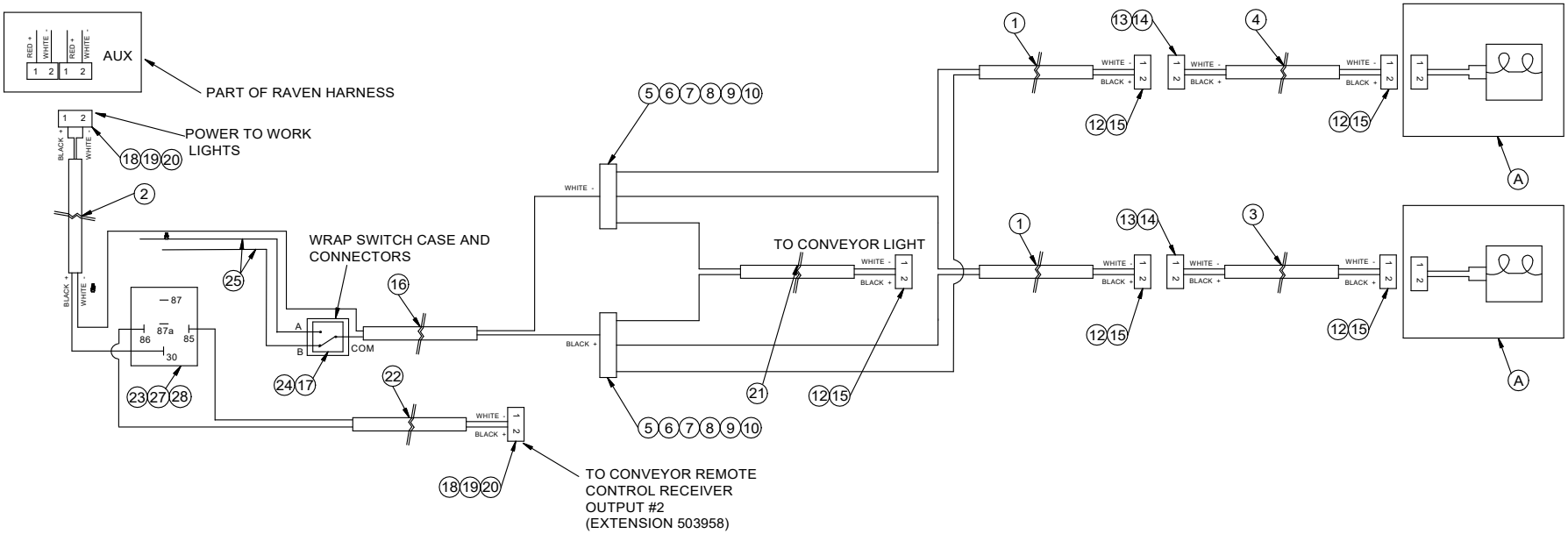

Parts Description:
Nova Conveyor Control
Part Number: 503907

ITEM	QTY.	PART NO.	DESCRIPTION
1	6'	256984	WIRE, 16 GA - BLACK - WX16-0
2	21'	257086	CABLE, 2 WIRE - 16 GA - SJ16-2
3	3	257090	SPLICE KIT - 6 WAY TPA- METRI PACK
4	3	257091	SPLICE KIT - 6 CONTACT BODY - 280 SERIES- METRI PACK
5	3	257092	SPLICE KIT - CAP - 280 SERIES- METRI PACK
6	3	257093	SPLICE KIT - 6 GANG COMMON BAR-METRI PACK
7	2	257094	SPLICE KIT - CAVITY PLUG - GREEN
8	15	257095	SPLICE KIT - SPLICE TERMINAL - FEMALE - METRI PACK
9	22	257118	TERMINAL, SOCKET - DEUTSCH - 16/14GA
10	2	257123	RECEPTACLE, CONNECTOR - DEUTSCH - 2 PIN
11	4	257127	TERMINAL, PIN - DEUTSCH - 16/14 GA
12	2	257133	RECEPTACLE, WEDGE - DEUTSCH - 2 PIN
13	2	257134	PLUG, CONNECTOR - DEUTSCH - 2 PIN
14	2	257135	PLUG, WEDGE - DEUTSCH - 2 PIN
15	9	257263	PLUG, CONNECTOR - DEUTSCH - LED - 2 PIN - DT06-2S
16	9	257264	PLUG, WEDGE - 2 POS LED - DEUTSCH - 2 PIN
17	1	257081	FUSE - 20 A
18	1	256978	FUSE HOLDER, INLINE
19	1	257075	CONNECTOR, BUTT - 16/14 GA
20	11'	257266	LOOM, SLIT - .250 IN - FLAME RETARDANT - BLK
21	1	280010	KAR-TECH REMOTE SYSTEM, 10 BUTTON

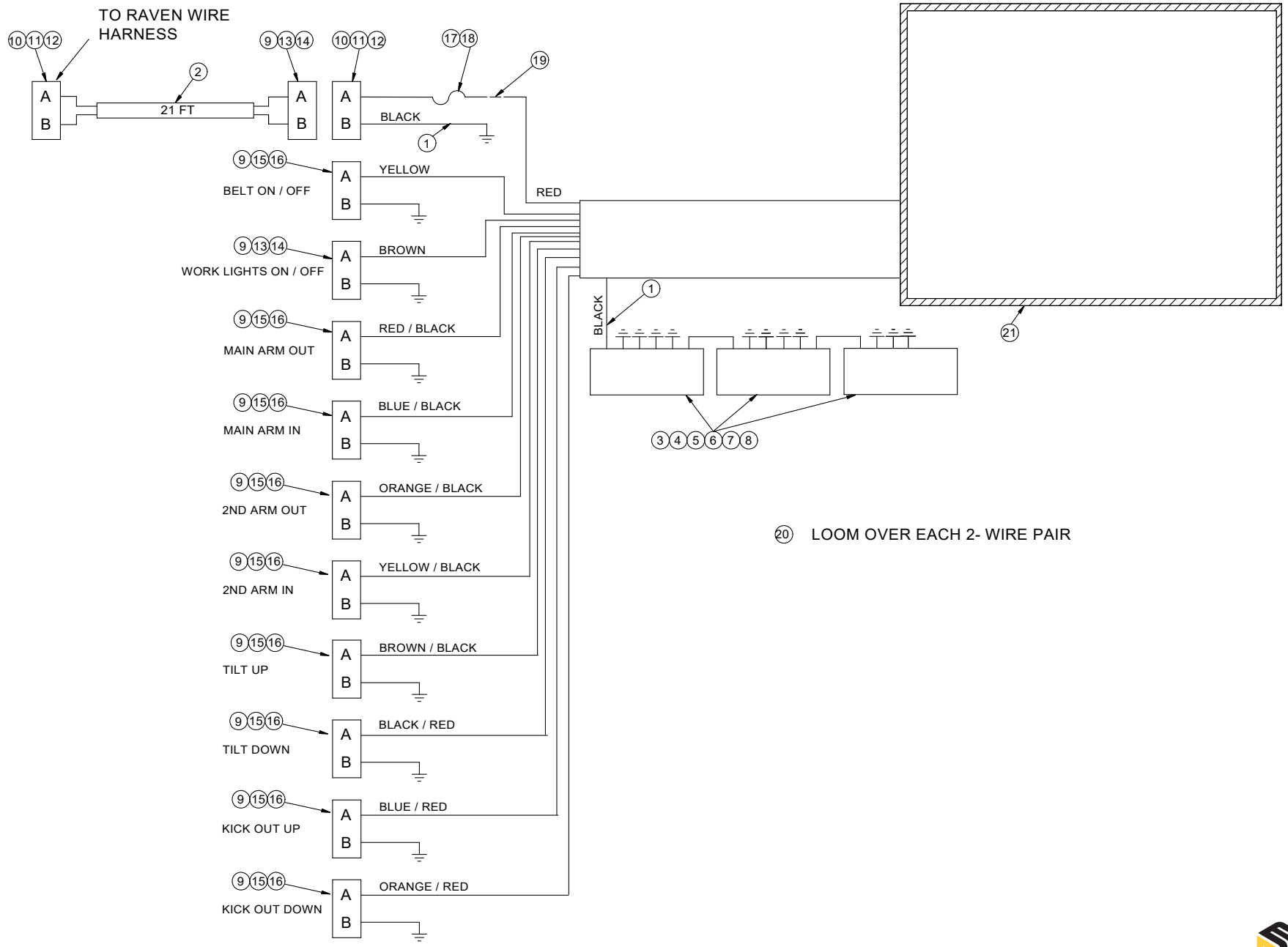
TO RAVEN WIRE HARNESS
10 11 12
9 13 14
10 11 12
17 18
19
2
A
B
21 FT
A
B
A
B
BLACK
1
9 15 16
BELT ON / OFF
A
B
YELLOW
RED
9 13 14
WORK LIGHTS ON / OFF
A
B
BROWN
9 15 16
MAIN ARM OUT
A
B
RED / BLACK
9 15 16
MAIN ARM IN
A
B
BLUE / BLACK
9 15 16
2ND ARM OUT
A
B
ORANGE / BLACK
9 15 16
2ND ARM IN
A
B
YELLOW / BLACK
9 15 16
TILT UP
A
B
BROWN / BLACK
9 15 16
TILT DOWN
A
B
BLACK / RED
9 15 16
KICK OUT UP
A
B
BLUE / RED
9 15 16
KICK OUT DOWN
A
B
ORANGE / RED
BLACK
1
21
3 4 5 6 7 8
20 LOOM OVER EACH 2- WIRE PAIR

Parts Description:
ISO 780 NOVA-10-D

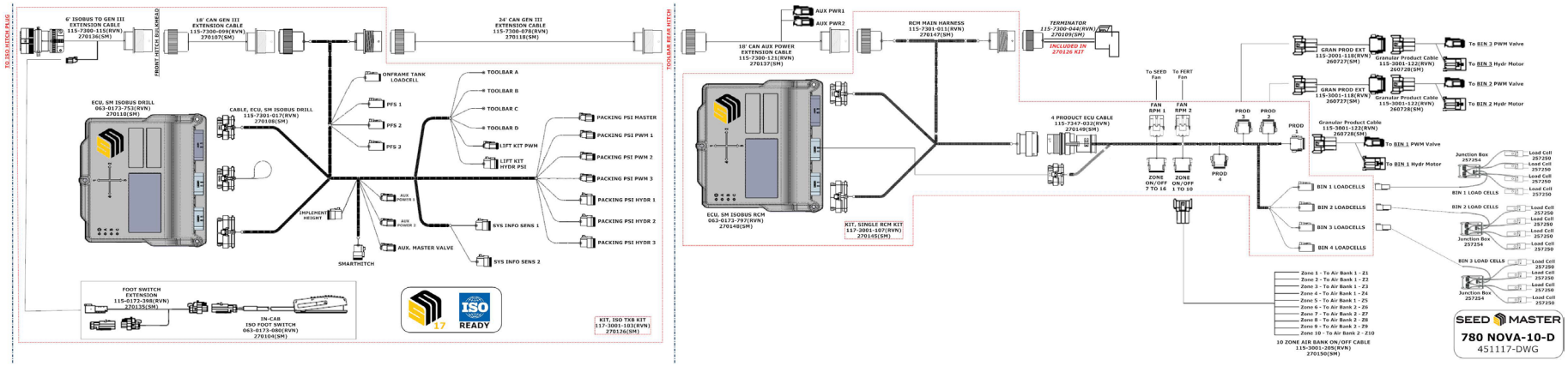

Parts Description:
ISO 630 NOVA-10-D

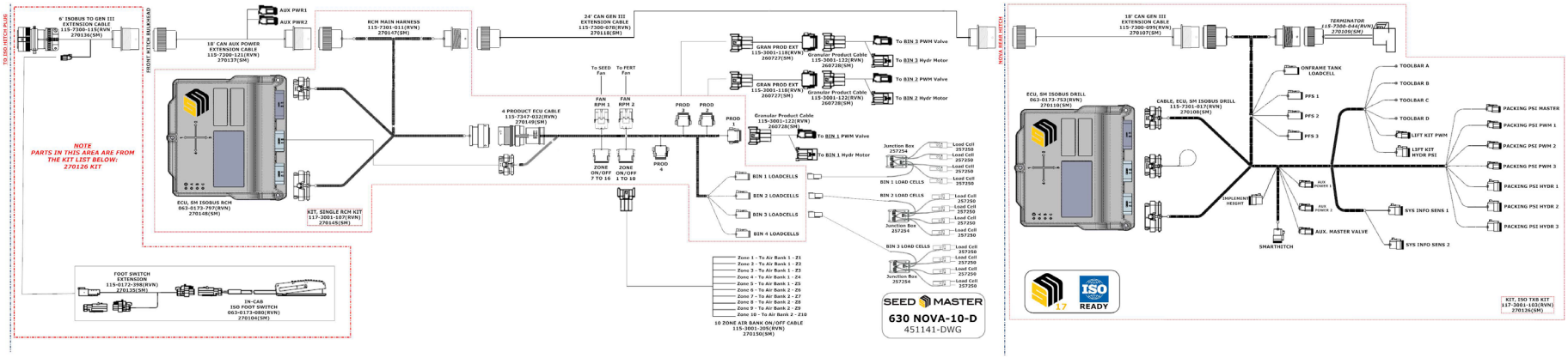

Parts Description:
ISO 780 NOVA-10-S SXX-R

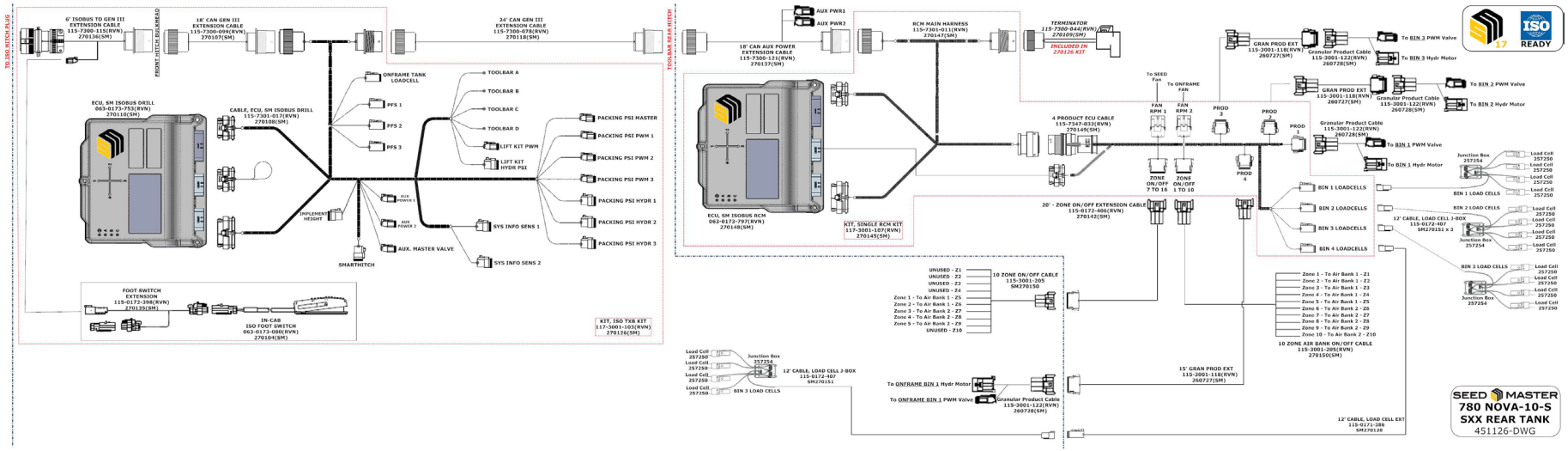
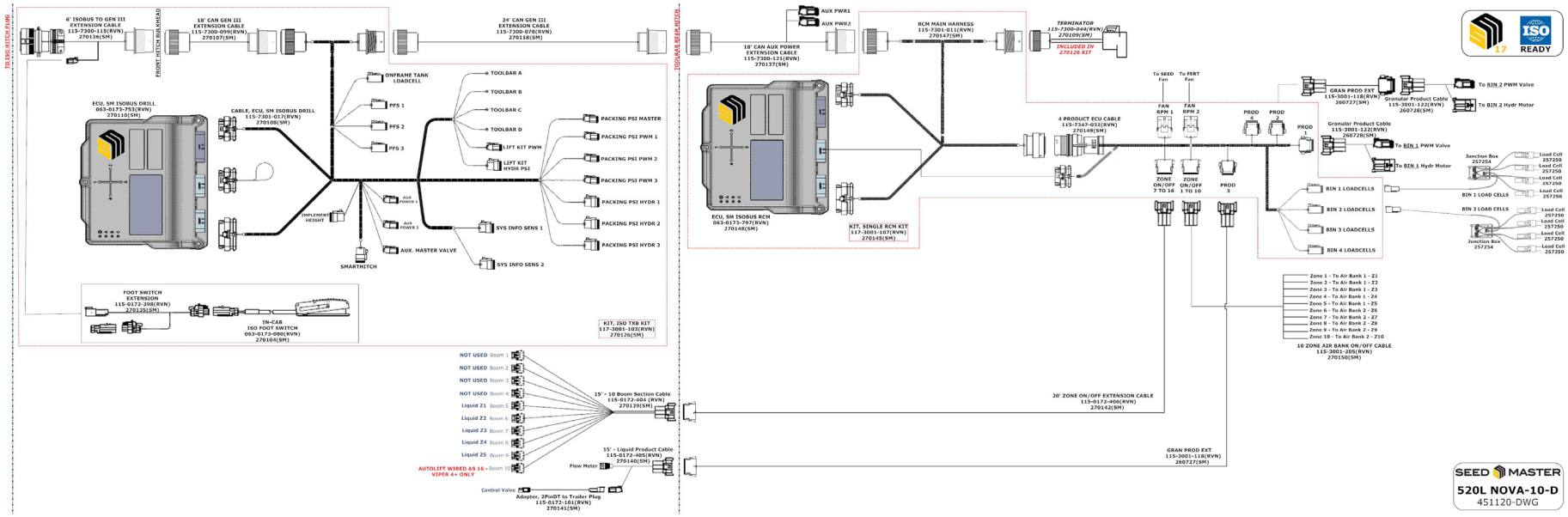
Parts Description:
ISO 520L NOVA-10-D