SEED MASTER

2020
TANKS PARTS MANUAL

www.seedmaster.ca

Table of Contents

TANKS - ULTRAPRO II METERING

2 Front Canola Tank - UltraPro II - 20 BU
4 Front Canola Tank - UltraPro II - 20 BU - Walkway
5 UltraPro II - 360 BU Tank
9 UltraPro II - 360 BU Tank - Subrail Mount
10 UltraPro II - 350 BU Tank
13 UltraPro II - 350 BU Tank - Subrail Mount
14 UltraPro II - 540 BU Tank
19 Ultrapro II - 540 BU Tank - Subrail Mount
22 Fan - UltraPro II 360/350 BU Tank
23 Drive Motor Mount - UltraPro II
24 Drive Cluster Mount - UltraPro II
25 Meter - UltraPro II
26 Standard Roller Cartridge - UltraPro II
28 Canola Roller Cartridge - UltraPro II
30 Compressed Air System - UltraPro II
32 Air/Electric Housing
34 Bag Lift
35 6" Fan RPM Sensor

HYDRAULIC SCHEMATICS

36 Meter Drive - UltraPro II 20 BU Tank
37 Fan - UltraPro II 20 BU Tank
38 Meter Drive - UltraPro II 360 BU Tank
39 Fan - UltraPro II 360 BU Tank
40 Meter Drive - UltraPro II 540 BU Tank
41 Fan - UltraPro II 540 BU Tank
42 Meter Drive and Fan Return Toolbar Kit
43 Bag Lift

PNEUMATIC SCHEMATICS

44 Zone Command Air Hardware - 2 Product
46 Zone Command Air Hardware - 1 Product
47 Air Compressor/Tank

ELECTRICAL SCHEMATICS

48 ISO Seed Only Toolbar with On-Frame 360 BU Tank
49 ISO Seed with Granular Fert Toolbar with On-Frame Tank
50 ISO Seed with Granular Fert Toolbar with On-Frame Tank and Tow Behind Liquid Tank
51 Existing VT - ISO Nova Cart Ready
52 ISO Seed Only Toolbar with 20 BU

Parts Description:

Front Canola Tank - UltraPro II - 20 BU

Part No. 502630

ITEM	QTY.	PART NO.	DESCRIPTION
1	1	502650-1	ASSY, LEFT MOUNT - FRONT CANOLA TANK - ULTRAPRO II - 20 - YEL
2	1	502660-1	ASSY, RIGHT MOUNT - FRONT CANOLA TANK - YEL
3	1	502640	ASSY, TANK - FRONT CANOLA TANK - ULTRAPRO II - 20 BU - YEL
4	10	412010	BDL, MAIN METER SECTION - ULTRAPRO II
5	10	412250	BDL, DRIVE CLUSTER - ULTRAPRO II
6	1	412200	BDL, DRIVE MOTOR MOUNT - ULTRAPRO II
7	3	250094	BOLT, HEX 3/4 X 4 UNF GR5 PL
8	3	403849	BUSH, 1.500 OD X .75 ID X 3/4 IN
9	3	403848	PLATE, SPACER 3/4 IN - AIR CART CRADLE MOUNT
10	23	250552	WASHER, FLAT 3/4IN GR8 PL
11	6	250082	BOLT, HEX 3/4 X 3 3/4 UNC GR5 PL
12	14	250451	NUT, HEX 3/4 UNC GR5 PL
13	3	270173	LOAD CELL - SCALE TEC - 1.5 SB SS 3MV/V DT-06
14	1	502390-1	ASSY, GAUGE PANEL ASSEMBLY - FRONT CANOLA TANK - 3 BOTTOM - YEL
15	1	250208	BOLT, U-SQ - 1/2 UNC X 4 ID X 5 IN - 2 IN
16	2	250555	WASHER, FLAT - 1/2 IN - GR8 - PL
17	2	250450	NUT, HEX 1/2 UNC GR5 PL
18	1	502502-2	BDL, AIR/ELEC CONTROL HOUSING - FRONT CANOLA TANK / TB NOVA
19	1	502095	BDL, WALKWAY - FRONT CANOLA TANK
20	1	255900	FAN, 6 IN - CRARY CCW
21	2	502673	SHEET, 14 GA - VALMAR SIDE SHIELD - FRONT CANOLA TANK
22	42	250106	BOLT, CARRIAGE - 5/16 X 3/4 IN UNC GR5 PL
23	42	250403	NUT, FLANGE - 5/16 UNC PL
24	2	406467	SHEET, 10 GA - TARP STRIP - ULTRAPRO II - 360 BU TANK - BLK
25	4	250206	BOLT, U-SQ - 3/4 UNC X 4 ID X 10 IN - 2 IN THD - GR8 PL
26	4	502115	GLASS, PLEXI - FRONT CANOLA TANK
27	8	250033	BOLT, HEX 1/4 X 1 IN GR5 PL
28	8	250559	WASHER, FLAT - 1/4 IN PL
29	8	250458	NUT, HEX - 1/4 UNC PL

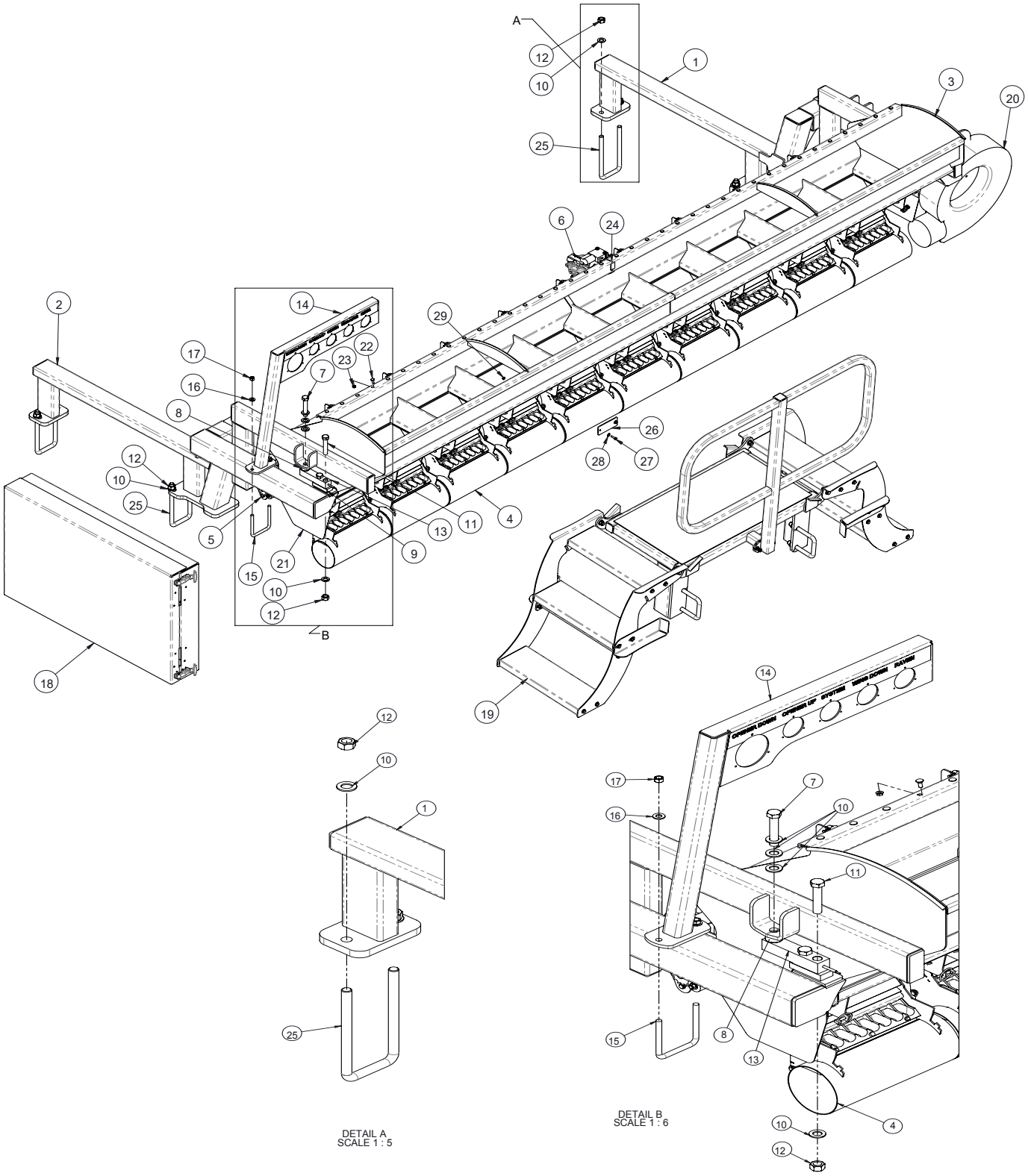
A
B
DETAIL A
SCALE 1 : 5
DETAIL B
SCALE 1 : 6

Parts Description:

Front Canola Tank - UltraPro II - 20 BU - Walkway

Part No. 502095

ITEM	QTY.	PART NO.	DESCRIPTION
1	1	502100-1	ASSY, PLATFORM - FRONT CANOLA TANK
2	1	502125	ASSY, HAND RAIL - WALKWAY - FRONT HITCH - BLK
3	2	502118	SHEET, FRMD 10GA - L.H. - WALKWAY - FRT CANOLA TANK - BLK
4	2	502117	SHEET, FRMD 10GA - R.H. - WALKWAY - FRT CANOLA TANK - BLK
5	6	500792	STEP, SURE GRIP - 7 X 20 7/8 IN - GALV - NOVA
6	2	502123	SHEET, FRMD 10GA - BUMP - L.H. - WALKWAY - FRT CANOLA - BLK
7	2	502124	SHEET, FRMD 10GA - BUMP - R.H. - WALKWAY - FRT CANOLA - BLK
8	2	500780	ASSY, REAR STAIR BRACE - NOVA XP 820
9	4	250001	BOLT, HEX 1/2 X 1 1/2 IN GR5 PL
10	32	250453	NUT, HEX - 3/8 UNC PL
11	64	250557	WASHER, FLAT - 3/8 IN GR8 PL
12	32	250036	BOLT, HEX 3/8 X 1 IN GR5 PL
13	2	250201	BOLT, U-SQ - 3/4 UNC X 4 ID X 6 IN - 2 IN THD - GR5 PL
14	4	250451	NUT, HEX 3/4 UNC GR5 PL
15	4	250552	WASHER, FLAT 3/4IN GR8 PL
16	2	250100	BOLT, CARRIAGE - 3/8 X 1 1/2IN UND GR5 PL
17	4	250400	NUT, FLANGE - 3/8 UNC PL
18	12	250555	WASHER, FLAT - 1/2 IN - GR8 - PL
19	4	250504	NUT, LOCK - 1/2 UNC - STOVER - PL

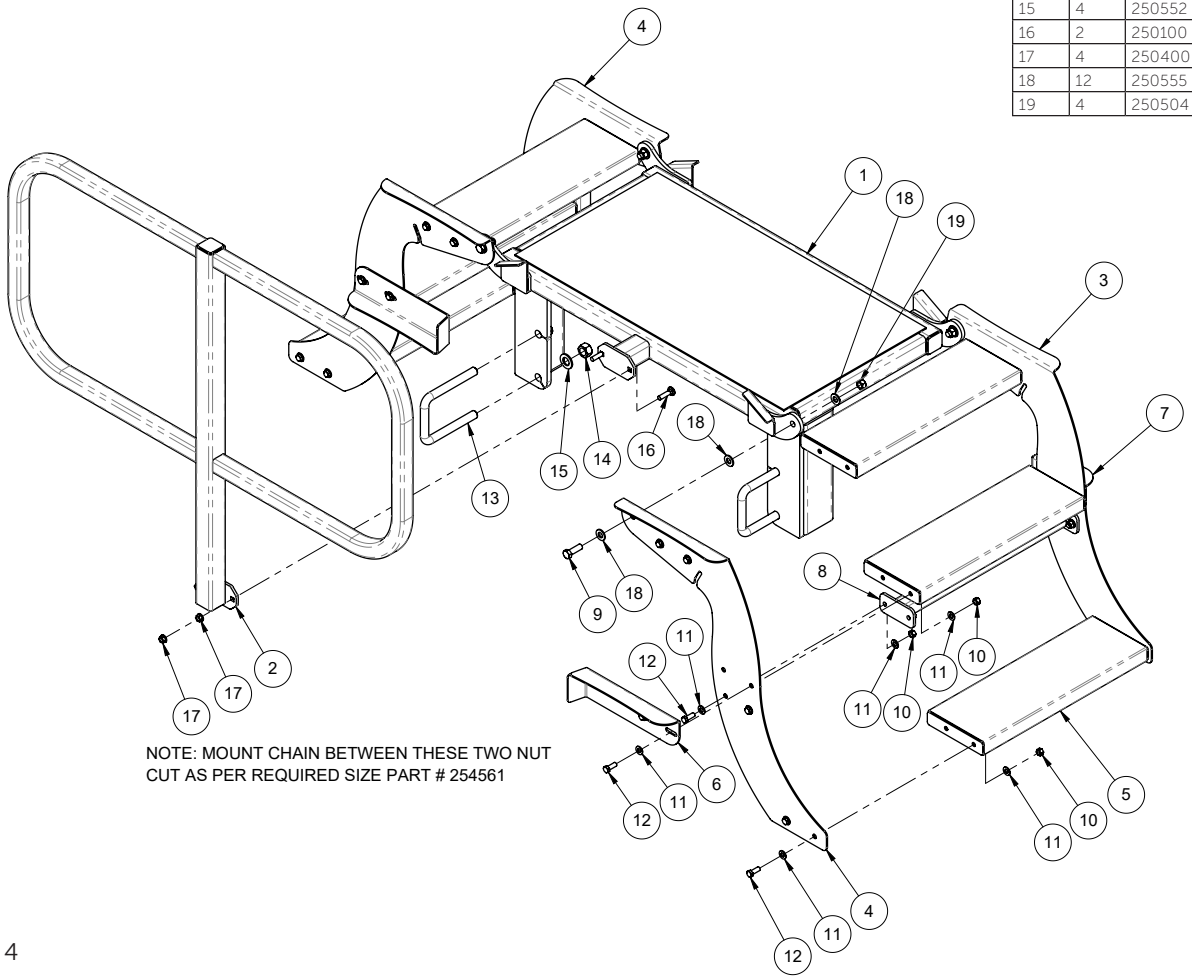

NOTE: MOUNT CHAIN BETWEEN THESE TWO NUT
CUT AS PER REQUIRED SIZE PART # 254561

Parts Description:

UltraPro II - 360 BU Tank

Part No. 406400

ITEM	QTY.	PART NO.	DESCRIPTION
1	1	406410	BDL, TANK - FRT - ULTRAPRO II - 360 BU
2	1	406480-1	BDL, TANK - REAR - ULTRAPRO II - 360 BU
3	1	406533-2	ASSY, SUBRAIL LH - ULTRAPRO II - 360 BU TANK - YEL
4	1	406539-2	ASSY, SUBRAIL RH - ULTRAPRO II - 360 BU TANK - YEL
5	1	406541-4	ASSY, WALKWAY LH SIDE - ULTRAPRO II - 360
6	1	406554-2	ASSY, MIDDLE WALKWAY - ULTRAPRO II - 360
7	1	406561-2	ASSY, WALKWAY RH SIDE - ULTRAPRO II - 360
8	1	406562	ASSY, HAND RAIL LH, WALKWAY - ULTRAPRO II - 360
9	1	406564-1	ASSY, HAND RAIL MID - LH WALKWAY - ULTRAPRO I
10	1	406566-3	ASSY, SIDE HANDRAIL LH WALKWAY - ULTRAPRO I
11	1	406705-1	ASSY, HAND RAIL MID WALKWAY - ULTRAPRO II - 36
12	1	406571-2	ASSY, HAND RAIL RH WALKWAY - ULTRAPRO II - 36
13	1	410101-1	BDL, BAGLIFTER
14	6	403848	PLATE, SPACER 3/4 IN - AIR CART CRADLE MOUNT
15	66	250552	WASHER, FLAT 3/4IN GR8 PL
16	8	250082	BOLT, HEX 3/4 X 3 3/4 UNC GR5 PL
17	64	250451	NUT, HEX 3/4 UNC GR5 PL
18	2	250094	BOLT, HEX 3/4 X 4 UNF GR5 PL
19	6	403849	BUSH, 1.500 OD X .75 ID X 3/4 IN
20	1	406603	ASSY, LADDER - WALKWAY - UPII 360 TANK - BLK
21	1	402535-1	ASSY, LADDER - FLIP - PRODUCT TANK - BLK
22	1	412350	BDL, DRIVE CLUSTER - ULTRAPRO II
23	11	412250	BDL, DRIVE CLUSTER - ULTRAPRO II
24	1	255920	FAN - S3 - RT-176 C/W MOTOR MNT
25	1	406575-2	ASSY, FAN BOX - ULTRAPRO II - 360 BU TANK - YEL
26	34	250014	BOLT, HEX 3/4 X 2 UNC GR5 PL
27	4	250019	BOLT, HEX 3/8 X 1 1/4 IN GR5 PL
28	1	255930	COUPLER, JAW - QUICKFLEX - S3 FAN - 3/4 SHAFT
29	1	255932	COUPLER, INSERT - QUICKFLEX - WHITE - S3 FAN
30	1	255933	COUPLER, COVER - QUICKFLEX - S3 FAN
31	1	255931	COUPLER, JAW - QUICKFLEX - S3 FAN - 1-1/8 SHAFT
32	37	250400	NUT, FLANGE - 3/8 UNC PL
33	35	250101	BOLT, CARRIAGE - 3/8 X 1 1/4 IN UNC GR5 PL
34	1	258404	MOTOR, HYD - 6 IN FAN - SAUER-DANFOSS - 11CC -
35	1	255910	GAUGE, PRESSURE - AIR - P734 2.5 0-36 OUNCES 1/
36	1	260090	HOSE BARB, 1/4 FPT X 1/4 HB
37	1	406588-1	ASSY, LATCH - ULTRAPRO II - 360 BU TANK - YEL
38	9	250556	WASHER, FLAT - 1/2 IN - PL
39	3	250013	BOLT, HEX 1/2 X 1 1/4 IN GR5 PL
40	5	250504	NUT, LOCK - 1/2 UNC - STOVER - PL
41	1	406532	Anti-Slip Tape - 4" x 60', Black - ULINE
42	1	406624	PLATE, FRMD 1/4 IN - SUPPORT BRKT - ULTRAPRO I
43	4	250208	BOLT, U-SQ - 1/2 UNC X 4 ID X 5 IN - 2 IN THD - GR8 PL
44	15	250450	NUT, HEX 1/2 UNC GR5 PL
45	1	405950-1	BDL, AIR/ELEC CONTROL HOUSING - SXX
46	1	406595	BDL, REMOTE DISPLAY PANEL
47	4	250048	BOLT, HEX 1/2 X 2 IN GR5 PL
48	17	250555	WASHER, FLAT - 1/2 IN - GR8 - PL
49	2	250071	BOLT, HEX 3/8 X 1 1/2 IN GR5 PL
50	13	250557	WASHER, FLAT - 3/8 IN GR8 PL
51	4	250503	NUT, LOCK - 3/8 UNC - STOVER - PL
52	1	250508	NUT, LOCK - 3/8 UNC - NYLOC - PL
53	1	406620	BDL, TRAYS AND GATES - ULTRAPRO II - 360 BU TANK
54	1	402164	PLATE, 1/4 - LADDER LOCK - WALKWAY - SXX345 - BLK
55	8	250203	BOLT, U-SQ - 3/4 UNC X 4 ID X 18 IN -2 IN THD - GR8 PL
56	8	400662	PLATE, BOLT 3/4 IN - U-BOLT
57	3	406474	SHEET, FRMD 10 GA - LC SHIELD - ULTRAPRO II - 36
58	2	406631	ASSY, LINKAGE - ULTRAPRO II - 360 BU TANK
59	2	250236	BOLT, U-SQ - 3/8 UNC X 2 ID X 3 IN - 2 IN THD - GR8 PL
60	4	250453	NUT, HEX - 3/8 UNC PL
61	3	250858	PIN, QUICK RELEASE - 3/8 X 2 IN
62	1	406706	ASSY, HOPPER - ULTRAPRO II - 360 BU TANK - YEL
63	2	406715	ASSY, QUICK DISCONNECT - HOPPER - YEL
64	2	406721	SHEET, FRMD 10GA - HOLDER PLATE - HOPPER - UL SHEET, FRMD 10GA -
65	1	406720	GATE - HOPPER - ULTRAPRO I
66	2	251075	SPROCKET, IDLER - 40T17 - 5/8 BORE
67	2	400965	IDLER, BUSHING - CHAIN - 75D - 1 1/2OD X 7/16 ID X
68	1	406730	BDL, UPPER METER CHAIN IDLER - ULTRAPRO II - 36 BDL, LOWER METER
69	1	406735	CHAIN IDLER - ULTRAPRO II - 3
70	6	270173	LOAD CELL - SCALE TEC - 1.5 SB SS 3MV/V DT-06
71	6	250468	NUT, JAM - 3/4-16 UNF - PL
72	4	250025	BOLT, HEX 3/4 X 4 UNC GR5 PL
73	4	250126	BOLT, HEX 3/4 X 4 1/2 UNF GR5 PL
74	2	406780	ISOLATOR - LOAD CELL- POLYURETHANE 70D
75	2	250690	COLLAR, SPLIT 3/4 IN - LOAD CELL SPACER
76	1	410145-1	SHEET, FRMD 1/4 IN - VALVE MOUNT - BAG LIFT - BLK
77	1	250212	BOLT, U-SQ - 3/8 UNC X 4 ID X 10 IN - 2 IN THD - GR8 PL

HARDWARE BAGS

406403 - FAN MNT
406408 - WALKWAY MNT
405951 - AIR/ ELEC PANEL
406409 - SUBRAILS MNT
406406 - REMOTE DISPLAY BOX
406615 - TRAY HOLDER

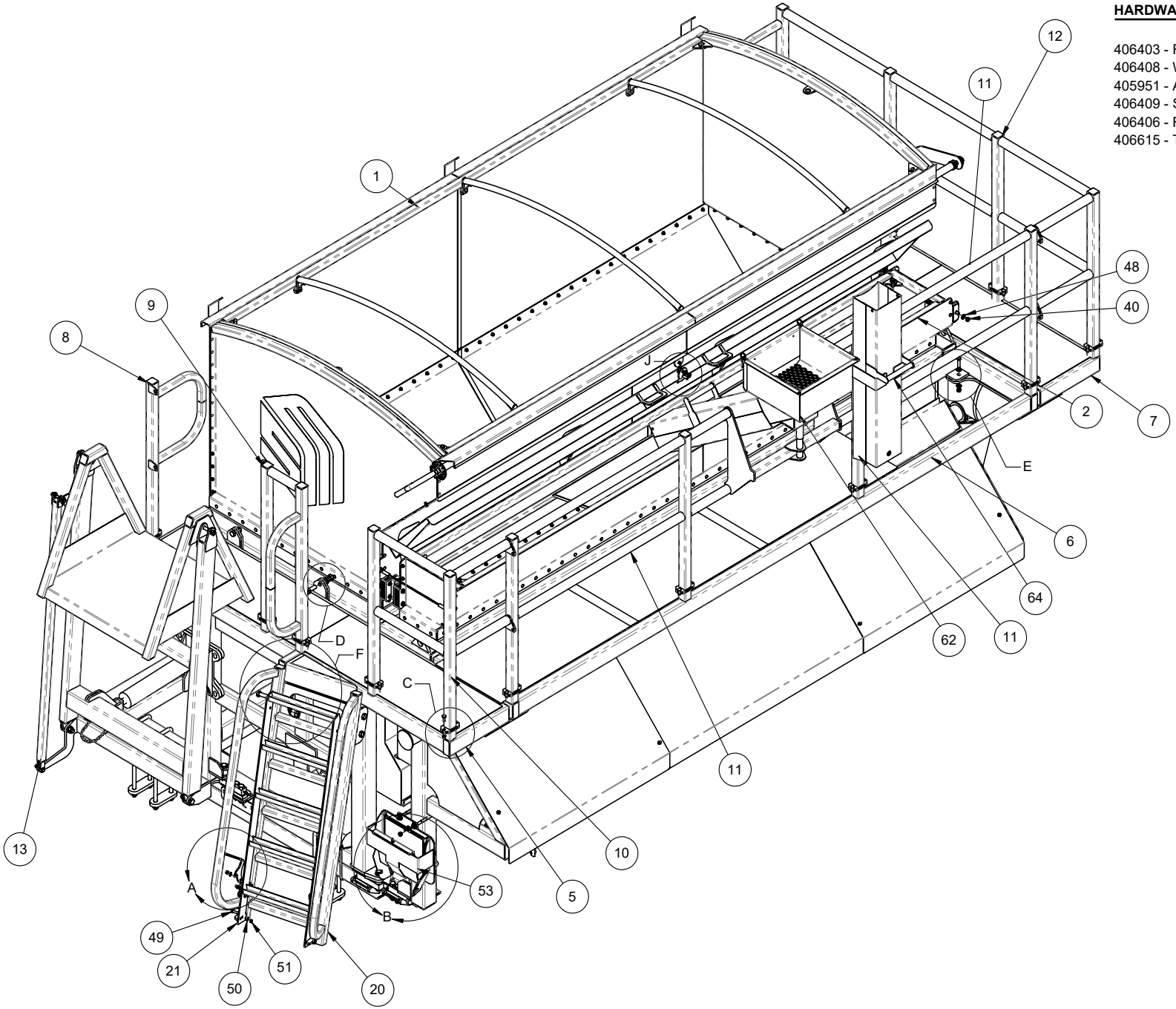

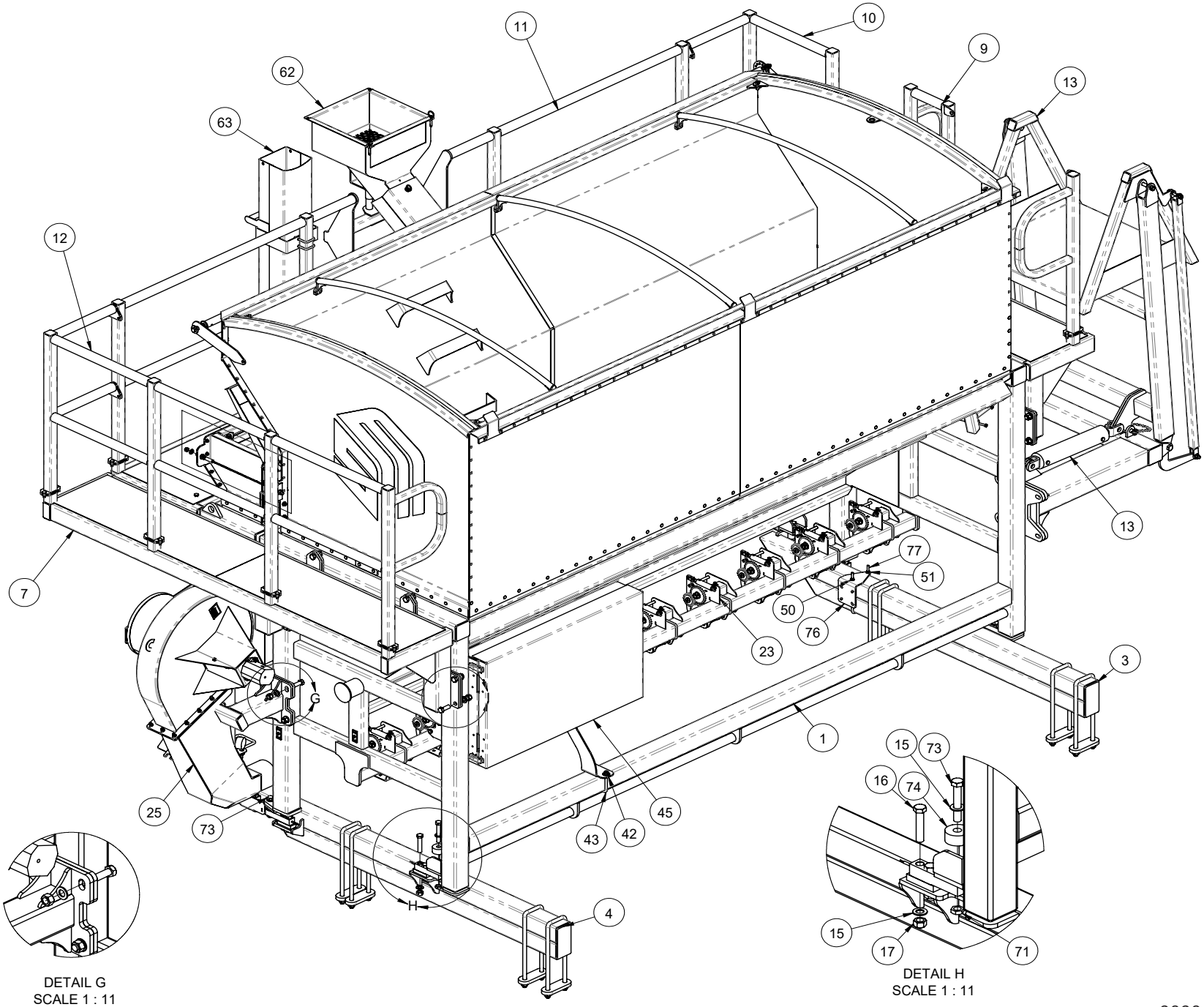
10
11
9
13
62
63
12
13
7
77
51
50
76
23
3
1
15
73
16
74
25
73
45
43
42
4
15
17
71
G
H
DETAIL G
SCALE 1 : 11
DETAIL H
SCALE 1 : 11

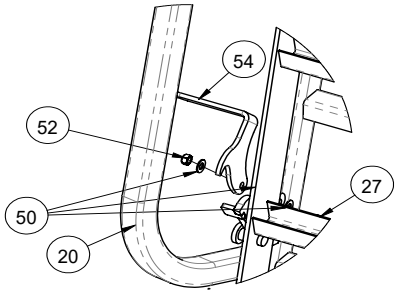

DETAIL A
SCALE 1 : 8

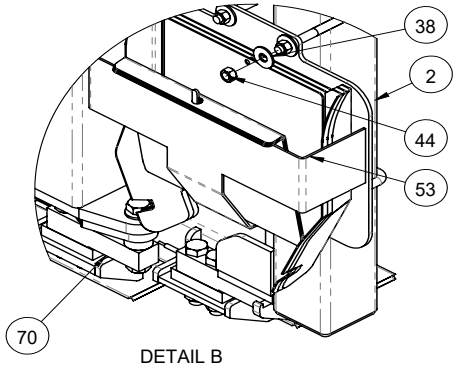

DETAIL B
SCALE 1 : 8

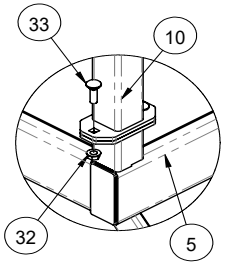

DETAIL C
SCALE 1 : 8

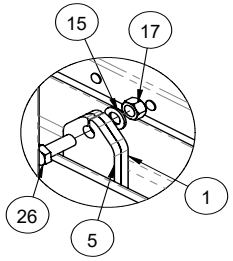

DETAIL D
SCALE 1 : 8

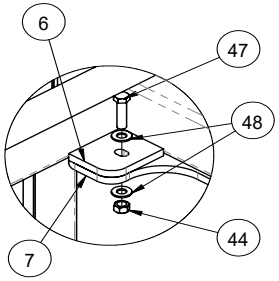

DETAIL E
SCALE 1 : 8

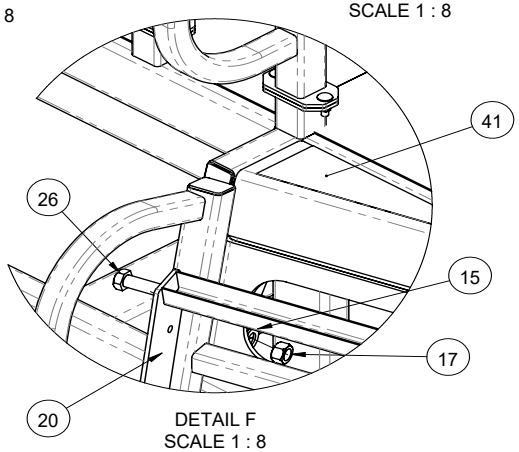

DETAIL F
SCALE 1 : 8

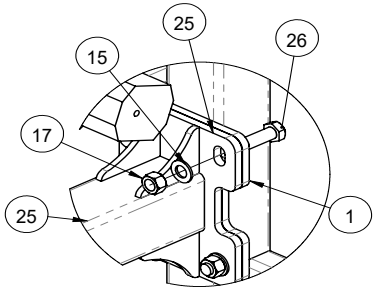

DETAIL G
SCALE 1 : 8

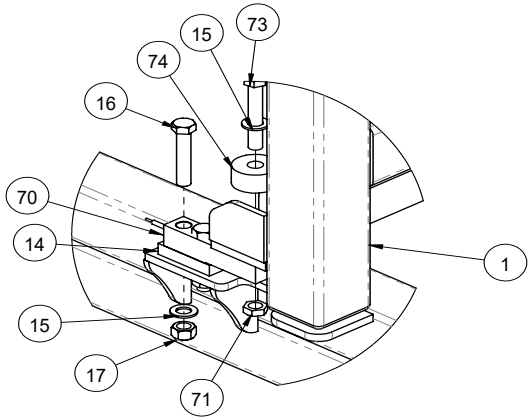

DETAIL H
SCALE 1 : 8

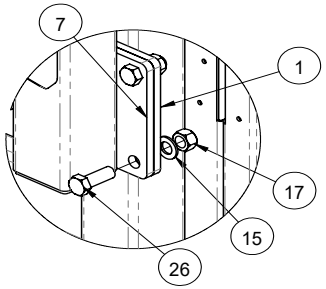

DETAIL I
SCALE 1 : 8

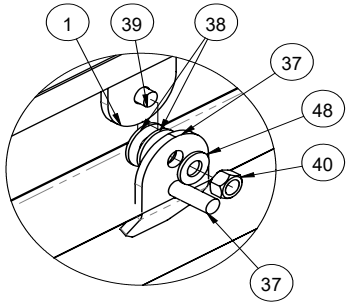

DETAIL J
SCALE 1 : 4

Parts Description:
UltraPro II - 360 BU Tank - Subrail Mount

ITEM	QTY.	PART NO.	DESCRIPTION
1	1	406533-1	ASSY, SUBRAIL LH - ULTRAPRO II - 360 BU TANK - YEL
2	1	406539-1	ASSY, SUBRAIL RH - ULTRAPRO II - 360 BU TANK - YEL
3	2	407190-2	ASSY, RAIL - MAIN FRM - SXX345 - BLK
4	1	406600	REAR AXLE - 800/65R32 / M-FOLD - ULTRAPRO II - 360 BU TANK
5	1	407510-1	ASSY, BEAM - REAR CROSS -M70 - BLK
6	8	250203	BOLT, U-SQ - 3/4 UNC X 4 ID X 18 IN -2 IN THD - GR8 PL
7	8	400662	PLATE, BOLT 3/4 IN - U-BOLT
8	16	250451	NUT, HEX 3/4 UNC GR5 PL
9	16	250552	WASHER, FLAT 3/4IN GR8 PL

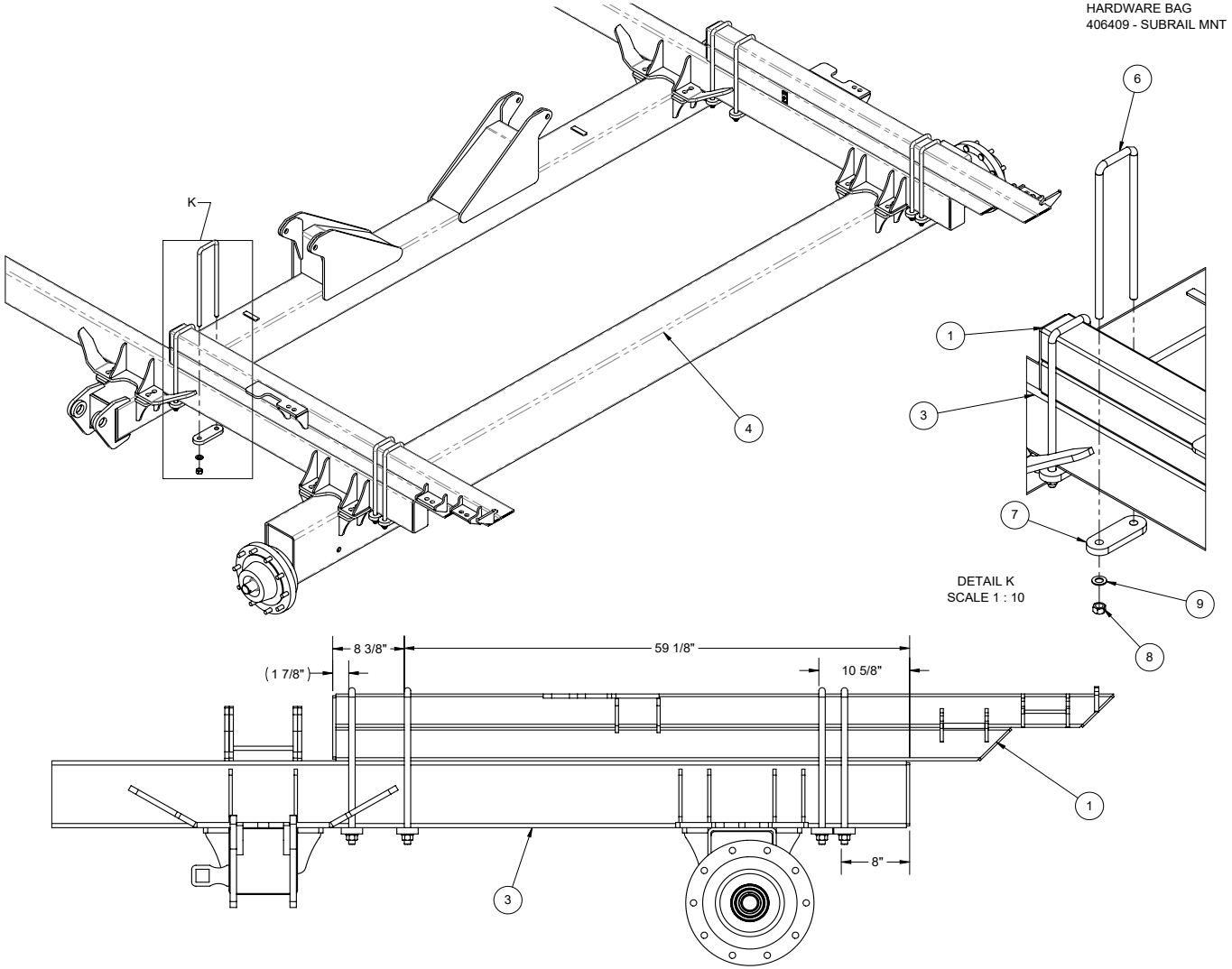

Parts Description:

UltraPro II - 350 BU Tank

Part No. 406640

ITEM	QTY	PART NO.	DESCRIPTION
1	12	250203	BOLT, U-SQ - 3/4 UNC X 4 ID X 18 IN -2 IN TH
2	12	400662	PLATE, BOLT 3/4 IN - U-BOLT
3	66	250552	WASHER, FLAT 3/4IN GR8 PL
4	60	250451	NUT, HEX 3/4 UNC GR5 PL
5	1	406679-1	ASSY, SUBRAIL LH - ULTRAPRO II - 350 BU T
6	1	406680-1	ASSY, SUBRAIL RH - ULTRAPRO II - 350 BU T
7	1	406650	BDL, TANK - 350 BU
8	32	250014	BOLT, HEX 3/4 X 2 UNC GR5 PL
9	39	250101	BOLT, CARRIAGE - 3/8 X 1 1/4 IN UNC GR5 PL
10	39	250400	NUT, FLANGE - 3/8 UNC PL
11	2	250071	BOLT, HEX 3/8 X 1 1/2 IN GR5 PL
12	7	250557	WASHER, FLAT - 3/8 IN GR8 PL
13	2	250503	NUT, LOCK - 3/8 UNC - STOVER - PL
14	4	250048	BOLT, HEX 1/2 X 2 IN GR5 PL
15	8	250555	WASHER, FLAT - 1/2 IN - GR8 - PL
16	10	250450	NUT, HEX 1/2 UNC GR5 PL
17	2	250019	BOLT, HEX 3/8 X 1 1/4 IN GR5 PL
18	1	402164	PLATE, 1/4 - LADDER LOCK - WALKWAY - SX
19	1	250508	NUT, LOCK - 3/8 UNC - NYLOC - PL
20	1	406541-4	ASSY, WALKWAY LH SIDE - ULTRAPRO II - 350
21	1	406561-2	ASSY, WALKWAY RH SIDE - ULTRAPRO II - 350
22	1	406554-2	ASSY, MIDDLE WALKWAY - ULTRAPRO II - 350
23	1	406564-1	ASSY, HAND RAIL MID - LH WALKWAY - ULT
24	1	406562	ASSY, HAND RAIL L.H. WALKWAY - ULTRAPR
25	1	406566-3	ASSY, SIDE HANDRAIL LH WALKWAY - ULTR
26	1	406569-1	ASSY, HAND RAIL MID WALKWAY - ULTRAPR
27	1	406571-2	ASSY, HAND RAIL RH WALKWAY - ULTRAPR
28	1	406603	ASSY, LADDER - WALKWAY - UPII 360 TANK
29	1	402535-1	ASSY, LADDER - FLIP - PRODUCT TANK - BLK
30	10	412025	ASSY, MAIN METER HOUSING - ULTRAPRO
31	2	250094	BOLT, HEX 3/4 X 4 UNF GR5 PL
32	4	250082	BOLT, HEX 3/4 X 3 3/4 UNC GR5 PL
33	1	403848	PLATE, SPACER 3/4 IN - AIR CART CRADLE M
34	2	403849	BUSH, 1.500 OD X .75 ID X 3/4 IN
35	1	405950	BDL, AIR/ELEC CONTROL HOUSING - SXX
36	1	406624	PLATE, FRMD 1/4 IN - SUPPORT BRKT - ULT
37	2	250208	BOLT, U-SQ - 1/2 UNC X 4 ID X 5 IN - 2 IN THD
38	6	250556	WASHER, FLAT - 1/2 IN - PL
39	2	250013	BOLT, HEX 1/2 X 1 1/4 IN GR5 PL
40	1	255920	FAN - S3 - RT-176 C/W MOTOR MNT
41	1	406575-2	ASSY, FAN BOX - ULTRAPRO II - 360 BU TAN
42	4	406474	SHEET, FRMD 10 GA - LC SHIELD - ULTRAPR
43	1	410101-1	BDL, BAGLIFTER
44	1	406695	TARP, REAR - ULTRAPRO II - 350 BU TANK
45	1	406693	ROD, 1/2 IN X 149.0000 - REAR TARP - ULTRA
46	1	406620	BDL, TRAYS AND GATES - ULTRAPRO II - 36

HARDWARE BAGS

406408 - WALKWAY
406472 - ELEC PANEL
406615 - TRAYS AND GATES
406656 - SUBRAIL MNT

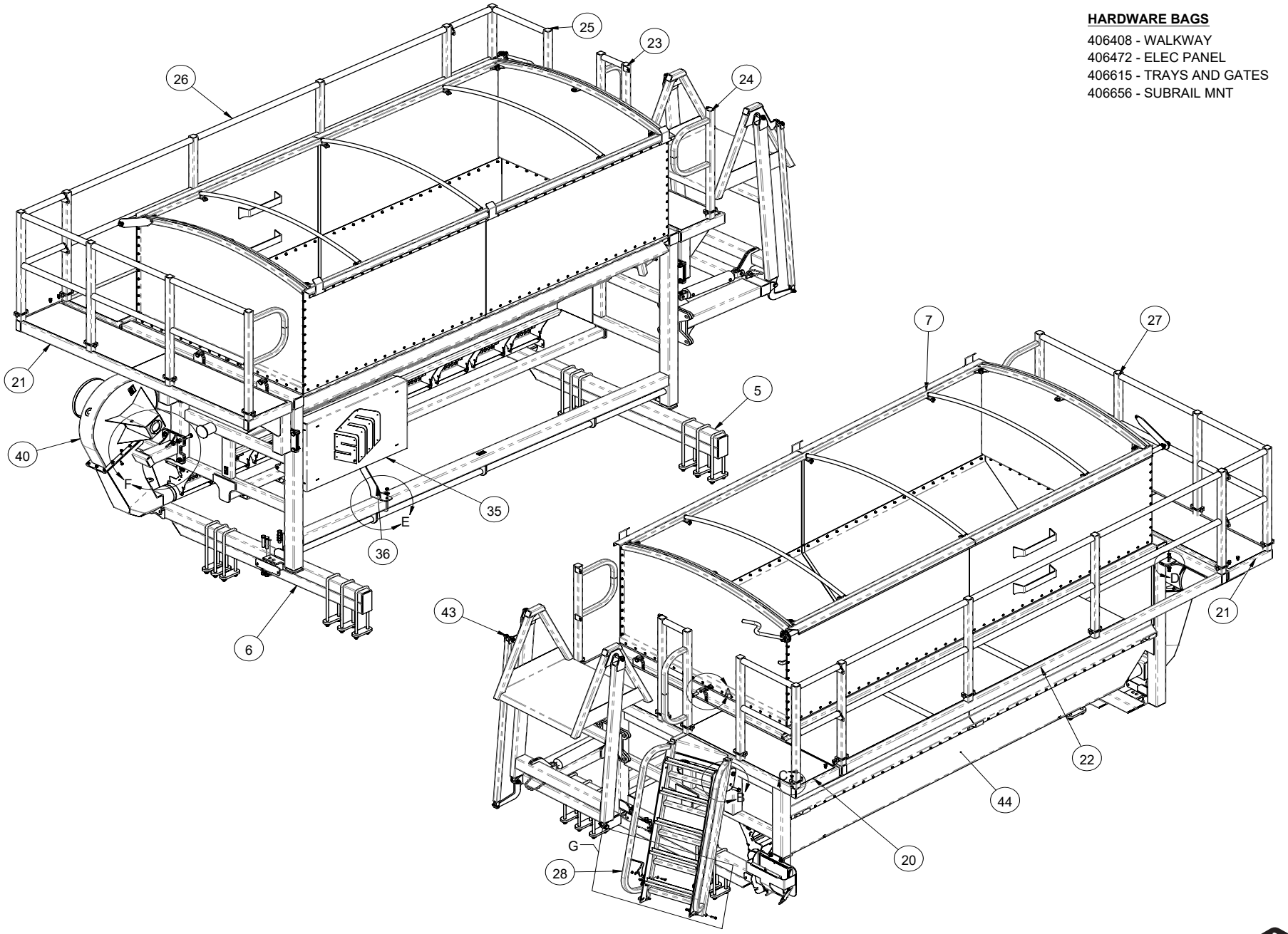

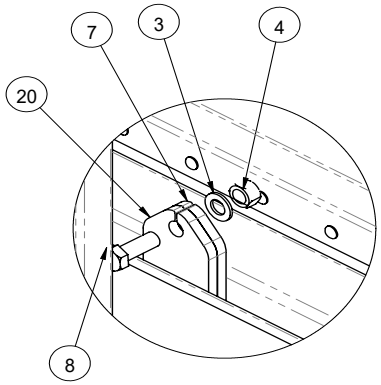

DETAIL A
SCALE 1 : 6

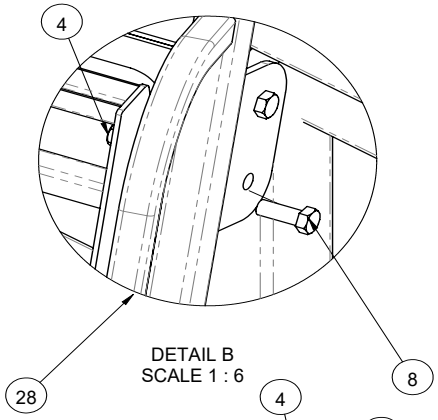

DETAIL B
SCALE 1 : 6

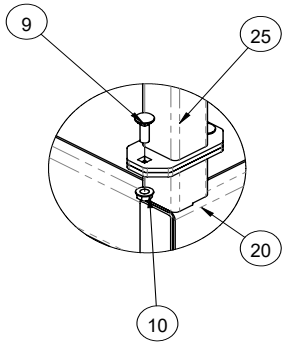

DETAIL C
SCALE 1 : 6

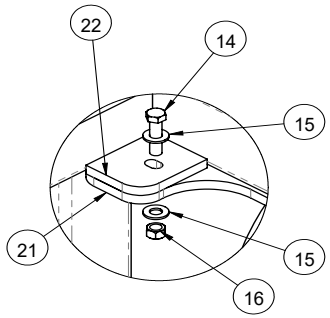

DETAIL D
SCALE 1 : 6

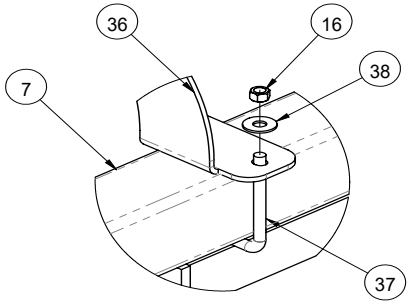

DETAIL E
SCALE 1 : 6

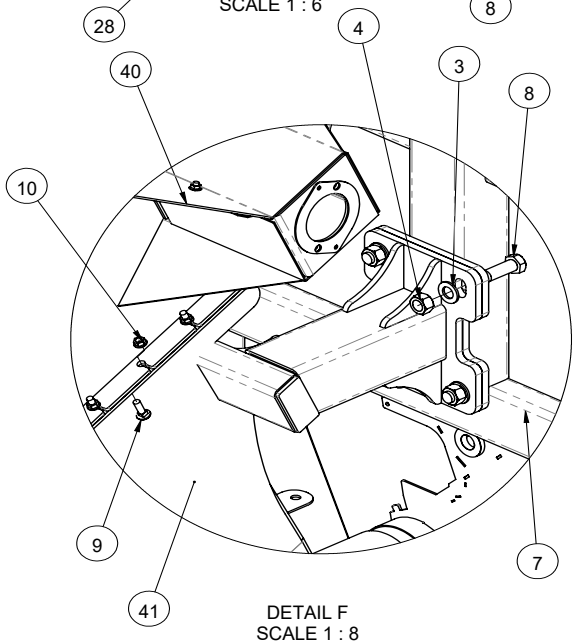

DETAIL F
SCALE 1 : 8

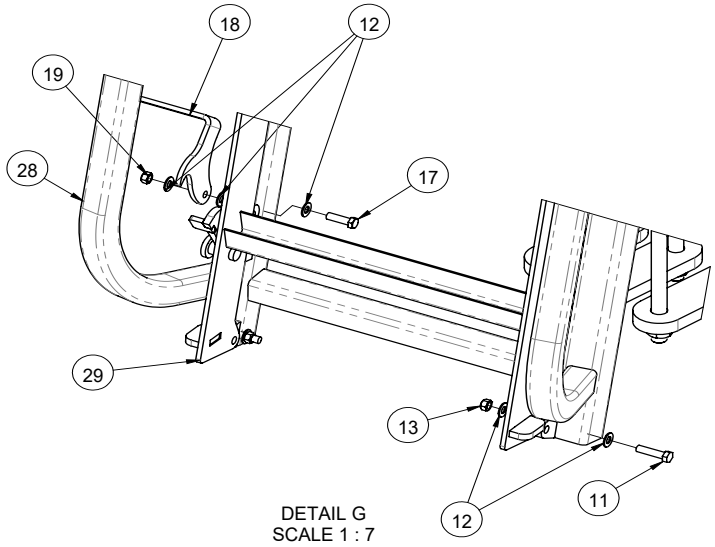

DETAIL G
SCALE 1 : 7

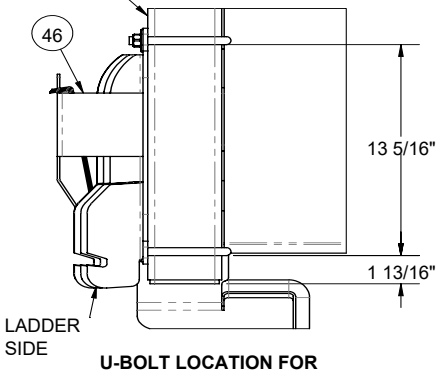

U-BOLT LOCATION FOR TRAYS AND GATES

Parts Description:

UltraPro II - 350 BU Tank Tank Subrail Mount

Part No. 406640

ITEM	QTY.	PART NO.	DESCRIPTION
1	1	406600	REAR AXLE - 800/65R32 / M-FOLD - ULTRAPRO II - 360 BU TANK
2	2	407190-2	ASSY, RAIL - MAIN FRM - SXX345 - BLK
3	1	407510-2	ASSY, BEAM - REAR CROSS - M70 - BLK
4	12	250203	BOLT, U-SQ - 3/4 UNC X 4 ID X 18 IN -2 IN THD - GR8 PL
5	12	400662	PLATE, BOLT 3/4 IN - U-BOLT
6	24	250552	WASHER, FLAT 3/4IN GR8 PL
7	24	250451	NUT, HEX 3/4 UNC GR5 PL
8	1	406679-1	ASSY, SUBRAIL LH - ULTRAPRO II - 350 BU TANK - YEL
9	1	406680-1	ASSY, SUBRAIL RH - ULTRAPRO II - 360 BU TANK - YEL

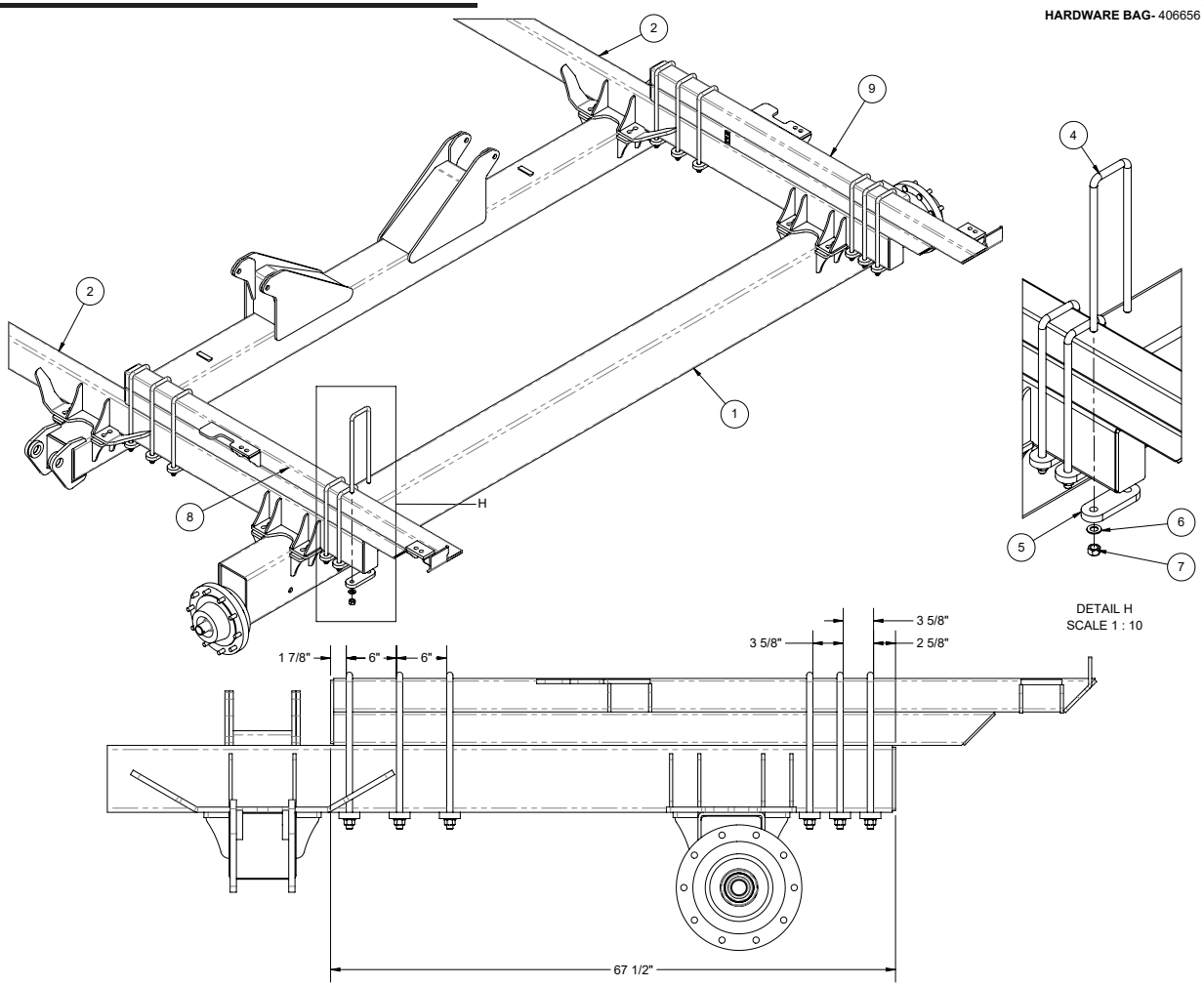

Parts Description:

UltraPro II - 540 BU Tank

Part No. 414000-1

ITEM	QTY.	PART NO.	DESCRIPTION
1	1	414010	BDL, TANK - FRONT - ULTRAPRO II - 540 BU
2	1	414100	BDL, TANK - MIDDLE - ULTRAPRO II - 540 BU
3	1	406480-1	BDL, TANK - REAR - ULTRAPRO II - 360 BU
4	1	414170-1	ASSY, ULTRAPRO II - SUBRAIL RH 540 BU TANK
5	1	414180-1	ASSY, ULTRAPRO II - SUBRAIL LH 540 BU TANK
6	2	406575-2	ASSY, FAN BOX - ULTRAPRO II - 360 BU TANK - YEL
7	2	255920	FAN - S3 - RT-176 C/W MOTOR MNT
8	5	403848	PLATE, SPACER 3/4 IN - AIR CART CRADLE MOUNT
9	5	270173	LOAD CELL - SCALE TEC - 1.5 SB SS 3MV/V DT-06
10	5	403849	BUSH, 1.500 OD X .75 ID X 3/4 IN
11	5	406474	SHEET, FRMD 10 GA - LC SHIELD - ULTRAPRO II - 360 BU TANK - YEL
12	1	406595	BDL, REMOTE DISPLAY PANEL
13	1	406620	BDL, TRAYS AND GATES - ULTRAPRO II - 360 BU TANK
14	1	414300	BDL, AIR/ELEC CONTROL HOUSING - ULTRAPRO II - 540 BU TANK
15	2	406631	ASSY, LINKAGE - ULTRAPRO II - 360 BU TANK
16	8	250555	WASHER, FLAT - 1/2 IN - GR8 - PL
17	8	250450	NUT, HEX 1/2 UNC GR5 PL
18	1	414280	ASSY, HOSES HOLDER - ULTRAPRO II - 540 BU TANK - BLK
19	1	414200	ASSY, WALKWAY RIGHT - BACK - ULTRAPRO II - 540 BU TANK - BLK
20	1	414210	ASSY, WALKWAY LEFT - BACK - ULTRAPRO II - 540 BU TANK - BLK
21	1	414220	ASSY, WALKWAY RIGHT - FRONT - ULTRAPRO II - 540 BU TANK - BLK
22	1	414230	ASSY, WALKWAY LEFT - FRONT - ULTRAPRO II - 540 BU TANK - BLK
23	1	406554-2	ASSY, MIDDLE WALKWAY - ULTRAPRO II - 360 BU TANK - BLK
24	1	406705-1	ASSY, HAND RAIL MID WALKWAY - ULTRAPRO II - 360 BU TANK - BLK
25	1	406603	ASSY, LADDER - WALKWAY - UPII 360 TANK - BLK
26	1	414240	ASSY, HAND RAIL FRONT RH WALKWAY - ULTRAPRO II - 540 BU TANK - BLK
27	1	414250	ASSY, HAND RAIL MID WALKWAY - ULTRAPRO II - 540 BU TANK - BLK
28	1	414260	ASSY, HAND RAIL MID L.H. WALKWAY - ULTRAPRO II - 540 BU TANK - BLK
29	1	414270	ASSY, HAND RAIL BACK RH WALKWAY - ULTRAPRO II - 540 BU TANK - BLK
30	1	406566-3	ASSY, SIDE HANDRAIL LH WALKWAY - ULTRAPRO II - 360 BU TANK - BLK
31	1	402535-1	ASSY, LADDER - FLIP - PRODUCT TANK - BLK
32	1	402164	PLATE, 1/4 - LADDER LOCK - WALKWAY - SXX345 - BLK
33	1	414330	ASSY, FRAME ANGLE BRKT - LH - M80 - BLK
34	1	414340	ASSY, FRAME ANGLE BRKT - RH - M80 BLK
35	1	414350	ASSY, RAIL - REINFORCEMENT FRM - SSG540 - BLK
36	1	414360	ASSY, RAIL - REINFORCEMENT FRM - SSG540 - BLK
37	1	406706	ASSY, HOPPER - ULTRAPRO II - 360 BU TANK - YEL
38	1	406715	ASSY, QUICK DISCONNECT - HOPPER - YEL
39	2	406721	SHEET, FRMD 10GA - HOLDER PLATE - HOPPER - ULTRAPRO II - 360 BU - YEL
40	4	259115	SM ICON 28"
41	1	406588-1	ASSY, LATCH - ULTRAPRO II - 360 BU TANK - YEL
42	10	250025	BOLT, HEX 3/4 X 4 UNC GR5 PL
43	15	250552	WASHER, FLAT 3/4IN GR8 PL
44	10	250451	NUT, HEX 3/4 UNC GR5 PL
45	3	250094	BOLT, HEX 3/4 X 4 UNF GR5 PL
46	5	250468	NUT, JAM - 3/4-16 UNF - PL
47	1	406780	ISOLATOR - LOAD CELL- POLYURETHANE 70D
48	1	250127	BOLT, HEX 3/4 X 5 UNF GR5 PL
49	3	250690	COLLAR, SPLIT 3/4 IN - LOAD CELL SPACER
50	1	250126	BOLT, HEX 3/4 X 4 1/2 UNF GR5 PL

HARDWARE BAGS :

406406 - FAN MNT
406406 - REMOTE DISPLAY BOX 414001 - WALKWAY MNT 414002 - SUBRAILS MNT 414003 - REINFORCEMENT RAIL 414004 - HOSE HOLDER

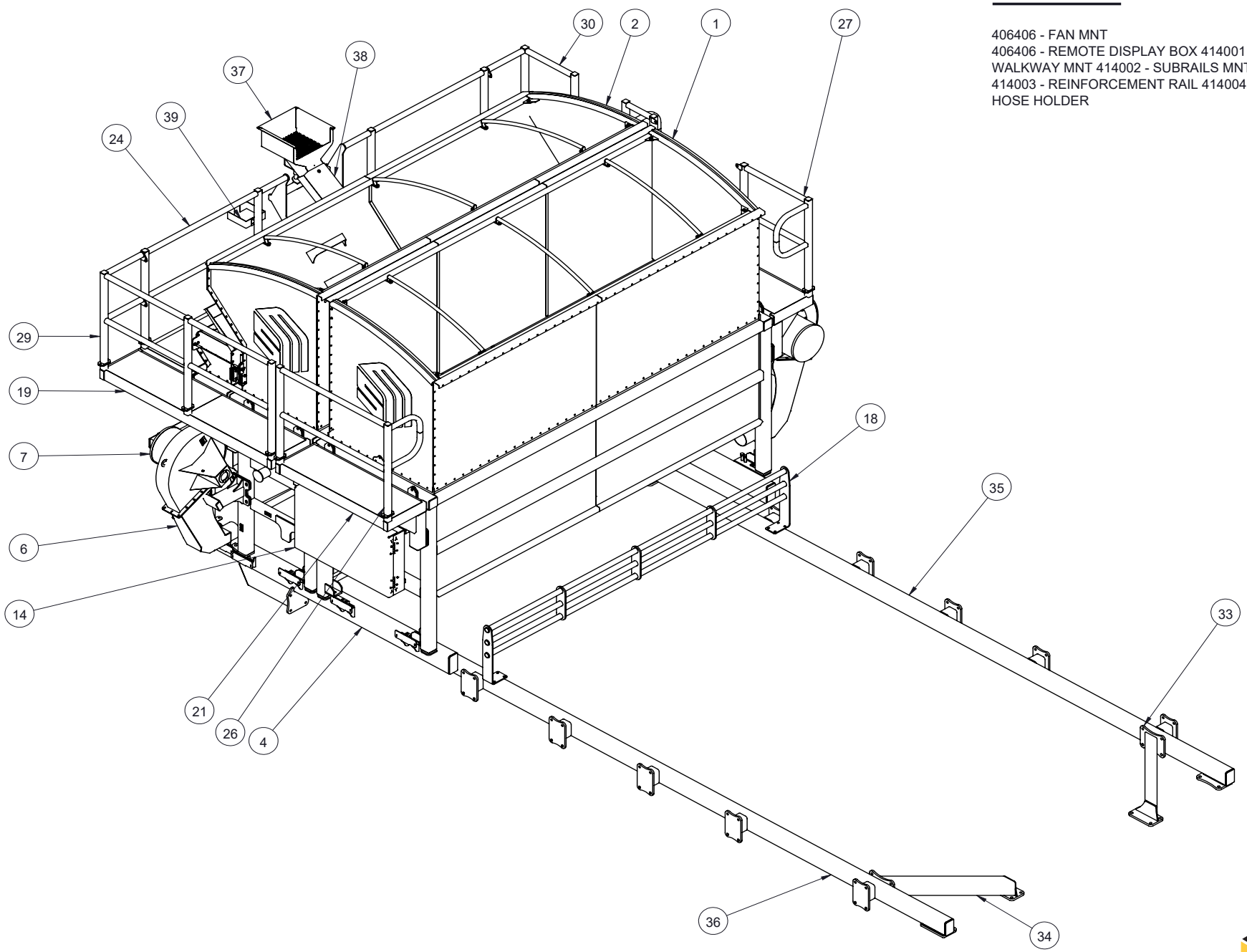

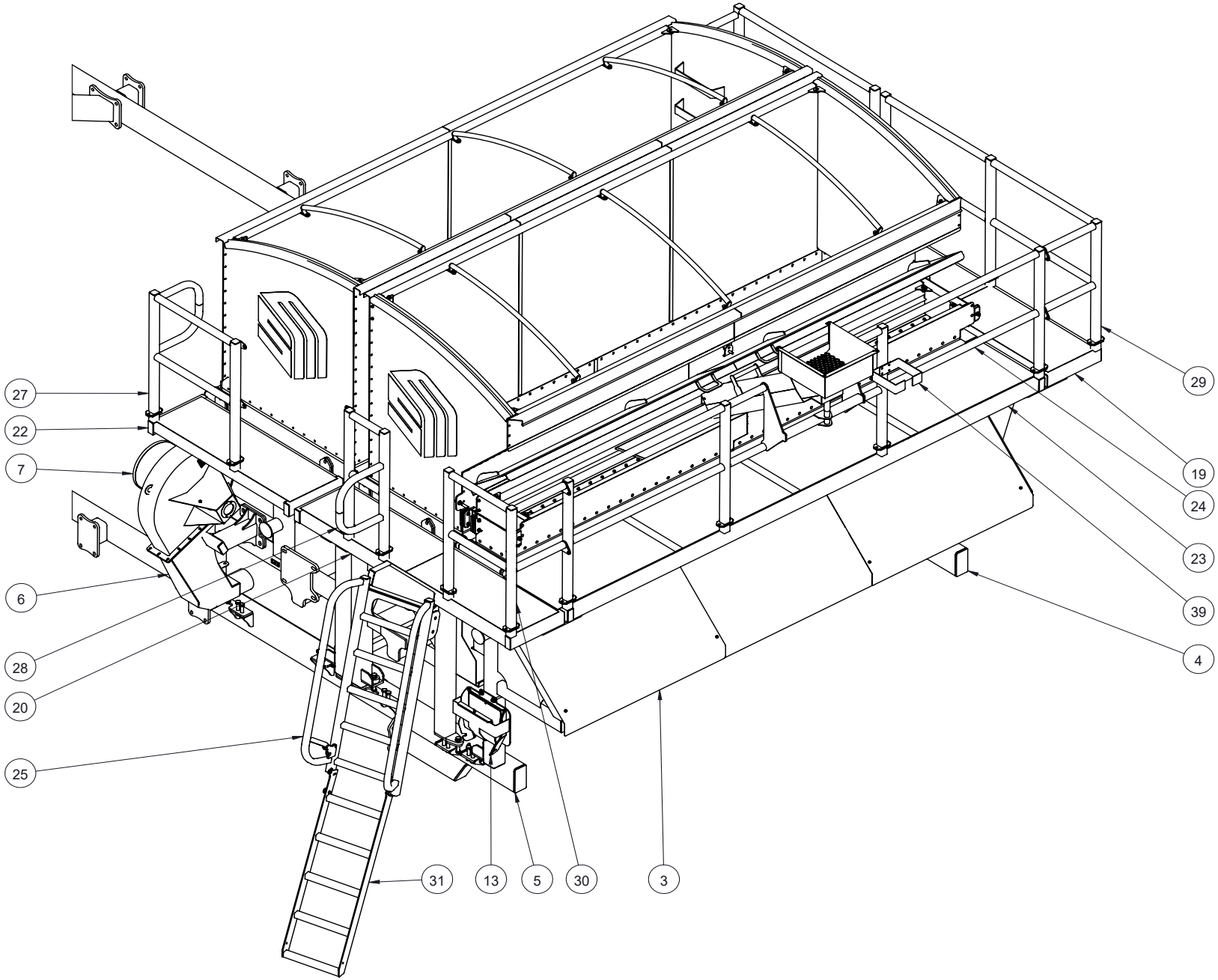
27
22
7
6
28
20
25
31
13
5
30
3
4
39
23
24
19
29

Parts Description:

UltraPro II - 540 BU Tank

Part No. 414000-1

ITEM	QTY.	PART NO.	DESCRIPTION
1	1	414010	BDL, TANK - FRONT - ULTRAPRO II - 540 BU
2	1	414100	BDL, TANK - MIDDLE - ULTRAPRO II - 540 BU
3	1	406480-1	BDL, TANK - REAR - ULTRAPRO II - 360 BU
4	1	414170-1	ASSY, ULTRAPRO II - SUBRAIL RH 540 BU TANK
5	1	414180-1	ASSY, ULTRAPRO II - SUBRAIL LH 540 BU TANK
6	1	Dual_Meter_v2	
7	21	412250	BDL, DRIVE CLUSTER - ULTRAPRO
8	1	412010	BDL, MAIN METER SECTION - ULTRAPRO II
9	2	406575-2	ASSY, FAN BOX - ULTRAPRO II - 360 BU TANK - YEL
10	2	255920	FAN - S3 - RT-176 C/W MOTOR MNT
11	2	258404	MOTOR, HYD - 6 IN FAN - SAUER-DANFOSS
12	52	250451	NUT, HEX 3/4 UNC GR5 PL
13	64	250552	WASHER, FLAT 3/4IN GR8 PL
14	10	250014	BOLT, HEX 3/4 X 2 UNC GR5 PL
15	10	403848	PLATE, SPACER 3/4 IN - AIR CART CRADLE MOUNT
16	10	270173	LOAD CELL - SCALE TEC - 1.5 SB SS 3MV/V DT-06
17	10	403849	BUSH, 1.500 OD X .75 ID X 3/4 IN
18	10	406474	SHEET, FRMD 10 GA - LC SHIELD - ULTRAPRO II - 360 BU TANK - YEL
19	1	410101-1	BDL, BAGLIFTER
20	1	406595	BDL, REMOTE DISPLAY PANEL
21	1	406620	BDL, TRAYS AND GATES - ULTRAPRO II - 360 BU TANK
22	1	414300	BDL, AIR/ELEC CONTROL HOUSING - ULTRAPRO II - 540 BU TANK
23	2	406631	ASSY, LINKAGE - ULTRAPRO II - 360 BU TANK
24	19	250555	WASHER, FLAT - 1/2 IN - GR8 - PL
25	17	250450	NUT, HEX 1/2 UNC GR5 PL
26	1	414280	ASSY, HOSES HOLDER - ULTRAPRO II - 540 BU TANK - BLK
27	1	414200	ASSY, WALKWAY RIGHT - BACK - ULTRAPRO II - 540 BU TANK - BLK
28	1	414210	ASSY, WALKWAY LEFT - BACK - ULTRAPRO II - 540 BU TANK - BLK
29	1	414220	ASSY, WALKWAY RIGHT - FRONT - ULTRAPRO II - 540 BU TANK - BLK
30	1	414230	ASSY, WALKWAY LEFT - FRONT - ULTRAPRO II - 540 BU TANK - BLK
31	1	406554-2	ASSY, MIDDLE WALKWAY - ULTRAPRO II - 360 BU TANK - BLK
32	1	406705-1	ASSY, HAND RAIL MID WALKWAY - ULTRAPRO II - 360 BU TANK - BLK
33	1	406603	ASSY, LADDER - WALKWAY - UPII 360 TANK - BLK
34	1	414240	ASSY, HAND RAIL FRONT RH WALKWAY - ULTRAPRO II - 540 BU TANK - BLK
35	1	414250	ASSY, HAND RAIL MID WALKWAY - ULTRAPRO II - 540 BU TANK - BLK
36	1	414260	ASSY, HAND RAIL MID L.H. WALKWAY - ULTRAPRO II - 540 BU TANK - BLK
37	1	414270	ASSY, HAND RAIL BACK RH WALKWAY - ULTRAPRO II - 540 BU TANK - BLK
38	1	406566-3	ASSY, SIDE HANDRAIL LH WALKWAY - ULTRAPRO II - 360 BU TANK - BLK
39	1	402535-1	ASSY, LADDER - FLIP - PRODUCT TANK - BLK
40	1	402164	PLATE, 1/4 - LADDER LOCK - WALKWAY - SXX345 - BLK
41	1	414330	ASSY, FRAME ANGLE BRKT - LH - M80 - BLK
42	1	414340	ASSY, FRAME ANGLE BRKT - RH - M80 BLK
43	1	414350	ASSY, RAIL - REINFORCEMENT FRM - SSG540 - BLK
44	1	414360	ASSY, RAIL - REINFORCEMENT FRM - SSG540 - BLK
45	2	412320	BDL, DRIVE MOTOR MOUNT - ULTRAPRO II
46	1	406706	ASSY, HOPPER - ULTRAPRO II - 360 BU TANK - YEL
47	1	406715	ASSY, QUICK DISCONNECT - HOPPER - YEL
48	2	406721	SHEET, FRMD 10GA - HOLDER PLATE - HOPPER - ULTRAPRO II - 360 BU - YEL
49	4	259115	SM ICON 28"
50	1	250202	BOLT, U-SQ - 3/4 UNC X 8 ID X 8 IN - 2 IN THD - GR8 PL
51	2	250209	BOLT, U-SQ - 3/4 UNC X 8 ID X 6 IN - 2 IN THD - GR8 PL
52	1	250231	BOLT, U-SQ - 3/4 UNC X 8 ID X 14 IN - 2 IN THD - GR8 PL
53	2	250210	BOLT, U-SQ - 3/4 UNC X 6 ID X 6 IN - 2 IN THD - GR8 PL
54	4	250218	BOLT, U-SQ - 1/2 UNC X 4 ID X 8 IN - 2 IN THD - GR5 PL
55	6	250203	BOLT, U-SQ - 3/4 UNC X 4 ID X 18 IN -2 IN THD - GR8 PL
56	6	400662	PLATE, BOLT 3/4 IN - U-BOLT
57	2	250003	BOLT, HEX 3/4 X 2 1/2 UNC GR5 PL
58	1	250101	BOLT, CARRIAGE - 3/8 X 1 1/4 IN UNC GR5 PL
59	1	250400	NUT, FLANGE - 3/8 UNC PL
60	8	250557	WASHER, FLAT - 3/8 IN GR8 PL
61	2	250503	NUT, LOCK - 3/8 UNC - STOVER - PL
62	1	250019	BOLT, HEX 3/8 X 1 1/4 IN GR5 PL
63	1	250071	BOLT, HEX 3/8 X 1 1/2 IN GR5 PL
64	1	250048	BOLT, HEX 1/2 X 2 IN GR5 PL
65	1	406588-1	ASSY, LATCH - ULTRAPRO II - 360 BU TANK - YEL
66	1	250504	NUT, LOCK - 1/2 UNC - STOVER - PL
67	1	250013	BOLT, HEX 1/2 X 1 1/4 IN GR5 PL
68	2	250556	WASHER, FLAT - 1/2 IN - PL
69	4	250453	NUT, HEX - 3/8 UNC PL
70	2	250236	BOLT, U-SQ - 3/8 UNC X 2 ID X 3 IN - 2 IN THD - GR8 PL
71	20	250025	BOLT, HEX 3/4 X 4 UNC GR5 PL
72	6	250094	BOLT, HEX 3/4 X 4 UNF GR5 PL
73	10	250468	NUT, JAM - 3/4-16 UNF - PL
74	2	406780	ISOLATOR - LOAD CELL- POLYURETHANE 70D
75	2	250127	BOLT, HEX 3/4 X 5 UNF GR5 PL
76	6	250690	COLLAR, SPLIT 3/4 IN - LOAD CELL SPACER
77	2	250126	BOLT, HEX 3/4 X 4 1/2 UNF GR5 PL

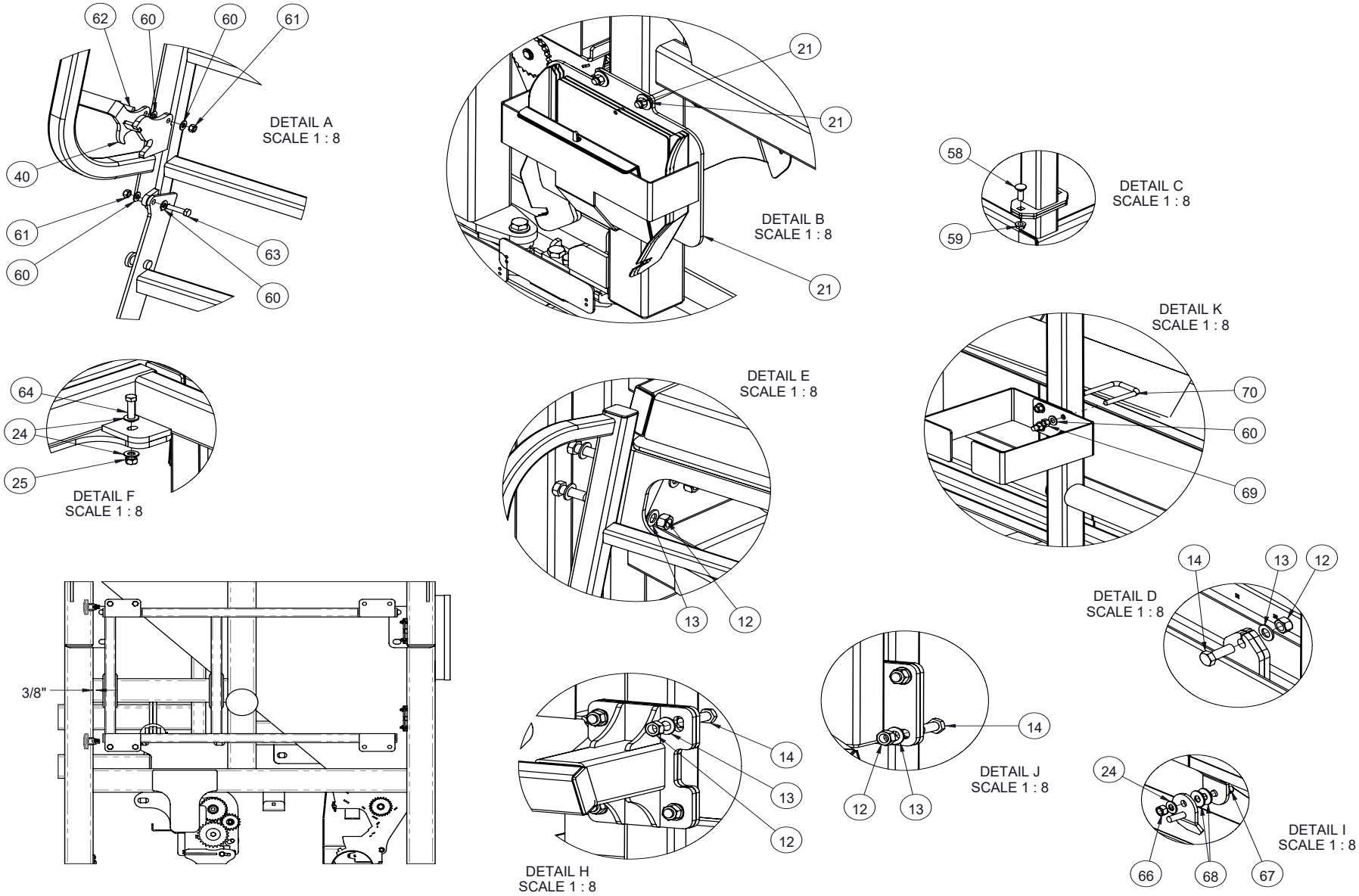
62
60
60
61
DETAIL A
SCALE 1 : 8
40
61
60
63
60
21
21
DETAIL B
SCALE 1 : 8
21
58
DETAIL C
SCALE 1 : 8
59
DETAIL K
SCALE 1 : 8
70
60
69
64
24
25
DETAIL F
SCALE 1 : 8
DETAIL E
SCALE 1 : 8
13
12
14
13
12
DETAIL D
SCALE 1 : 8
3/8"
14
13
12
DETAIL H
SCALE 1 : 8
14
DETAIL J
SCALE 1 : 8
12
13
24
DETAIL I
SCALE 1 : 8
66
68
67

Parts Description:

UltraPro II - 540 BU Tank Subrail Mount

Part No. 414000-1

ITEM	QTY.	PART NO.	DESCRIPTION
1	1	414170-1	ASSY, ULTRAPRO II - SUBRAIL RH 540 BU TANK
2	1	414180-1	ASSY, ULTRAPRO II - SUBRAIL LH 540 BU TANK
3	9	406474	SHEET, FRMD 10 GA - LC SHIELD - ULTRAPRO II - 360 BU TANK - YEL
4	5	403848	PLATE, SPACER 3/4 IN - AIR CART CRADLE MOUNT
5	5	270173	LOAD CELL - SCALE TEC - 1.5 SB SS 3MV/V DT-06
6	5	403849	BUSH, 1.500 OD X .75 ID X 3/4 IN
7	1	414280	ASSY, HOSES HOLDER - ULTRAPRO II - 540 BU TANK - BLK
8	1	414330	ASSY, FRAME ANGLE BRKT - LH - M80 - BLK
9	1	414340	ASSY, FRAME ANGLE BRKT - RH - M80 BLK
10	1	414350	ASSY, RAIL - REINFORCEMENT FRM - SSG540 - BLK
11	1	414360	ASSY, RAIL - REINFORCEMENT FRM - SSG540 - BLK
12	2	408490-7	ASSY, RAIL - HEAVY MAIN FRM - SXG550 - BLK
13	1	405991	ASSY, REAR AXLE - SXG555 - DUAL 710/70R38 - BLK
14	1	250202	BOLT, U-SQ - 3/4 UNC X 8 ID X 8 IN - 2 IN THD - GR8 PL
15	2	250209	BOLT, U-SQ - 3/4 UNC X 8 ID X 6 IN - 2 IN THD - GR8 PL
16	1	250231	BOLT, U-SQ - 3/4 UNC X 8 ID X 14 IN - 2 IN THD - GR8 PL
17	2	250210	BOLT, U-SQ - 3/4 UNC X 6 ID X 6 IN - 2 IN THD - GR8 PL
18	32	250451	NUT, HEX 3/4 UNC GR5 PL
19	39	250552	WASHER, FLAT 3/4IN GR8 PL
20	4	250218	BOLT, U-SQ - 1/2 UNC X 4 ID X 8 IN - 2 IN THD - GR5 PL
21	8	250555	WASHER, FLAT - 1/2 IN - GR8 - PL
22	8	250450	NUT, HEX 1/2 UNC GR5 PL
23	6	250203	BOLT, U-SQ - 3/4 UNC X 4 ID X 18 IN -2 IN THD - GR8 PL
24	6	400662	PLATE, BOLT 3/4 IN - U-BOLT
25	2	250003	BOLT, HEX 3/4 X 2 1/2 UNC GR5 PL
26	10	250025	BOLT, HEX 3/4 X 4 UNC GR5 PL
27	3	250094	BOLT, HEX 3/4 X 4 UNF GR5 PL
28	5	250468	NUT, JAM - 3/4-16 UNF - PL
29	1	406780	ISOLATOR - LOAD CELL- POLYURETHANE 70D
30	1	250127	BOLT, HEX 3/4 X 5 UNF GR5 PL
31	3	250690	COLLAR, SPLIT 3/4 IN - LOAD CELL SPACER
32	1	250126	BOLT, HEX 3/4 X 4 1/2 UNF GR5 PL

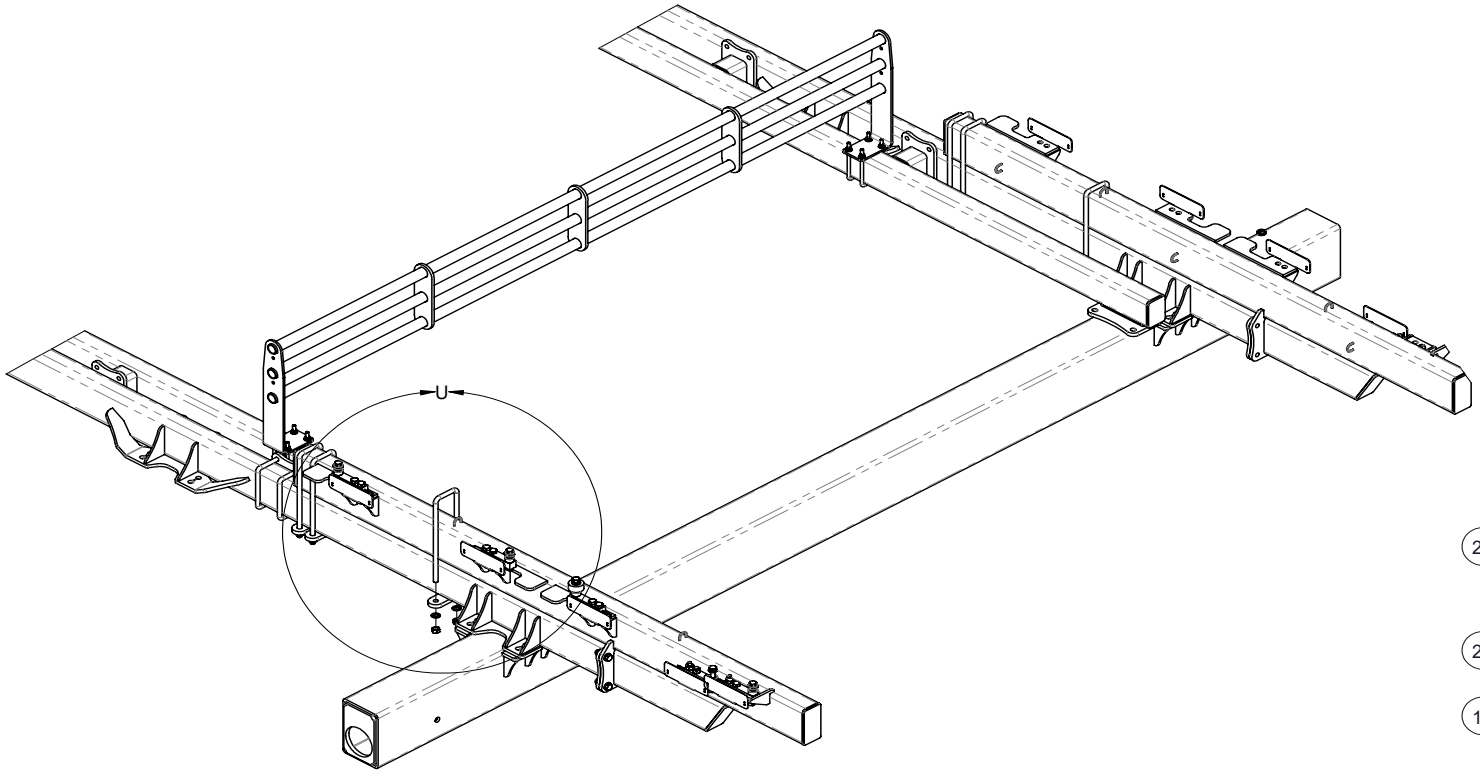

DETAIL U
SCALE 2 : 25

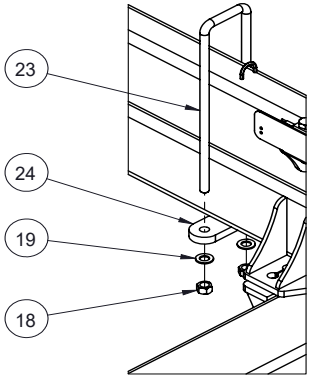

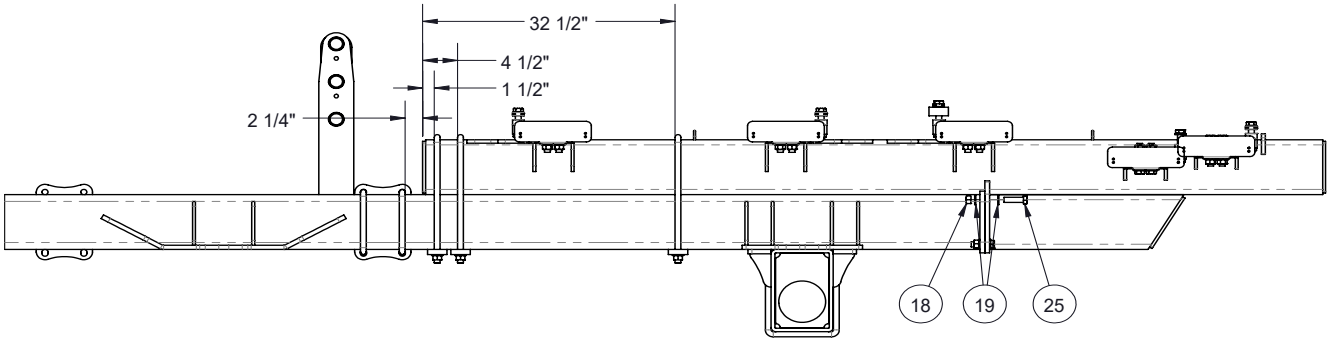

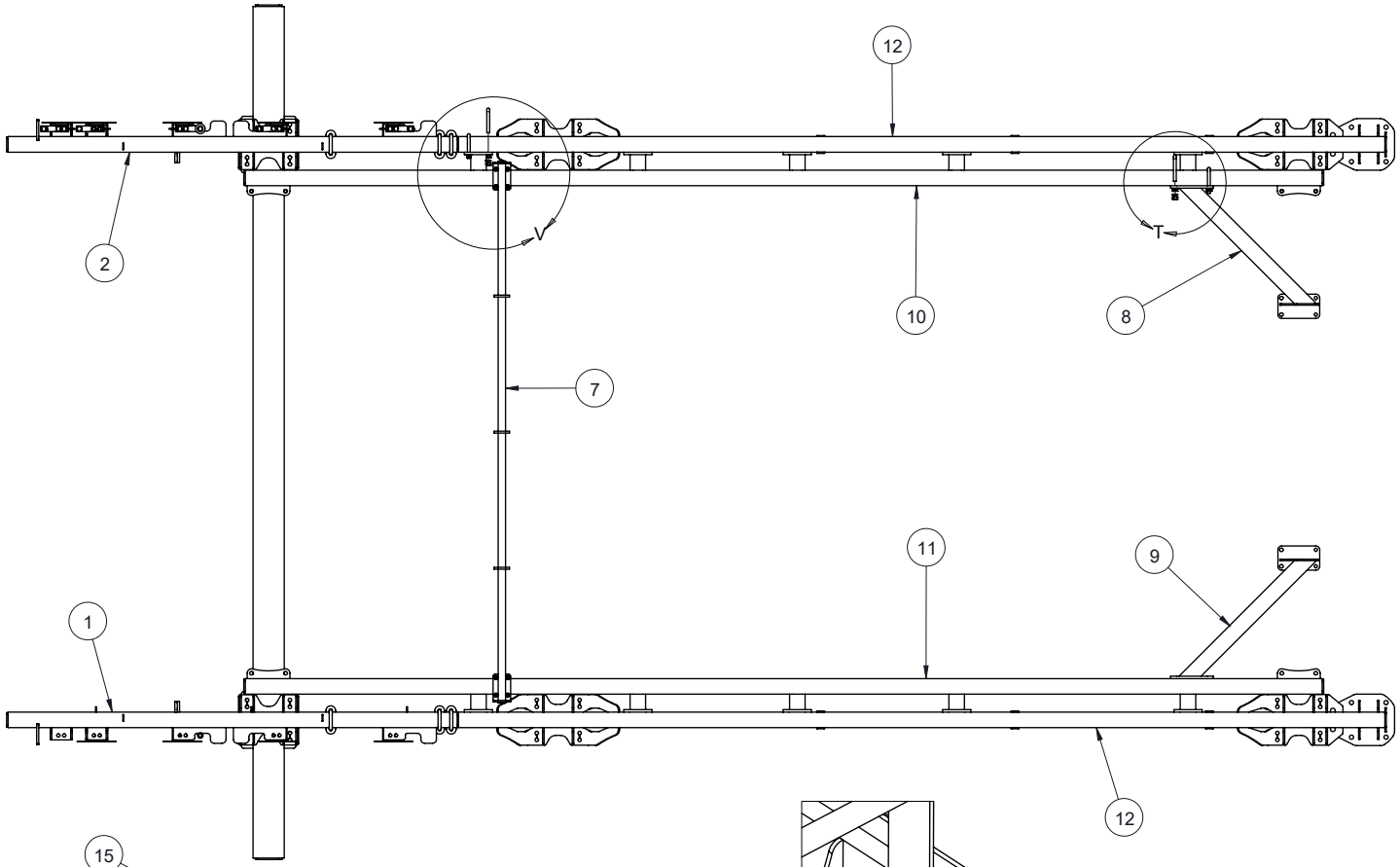

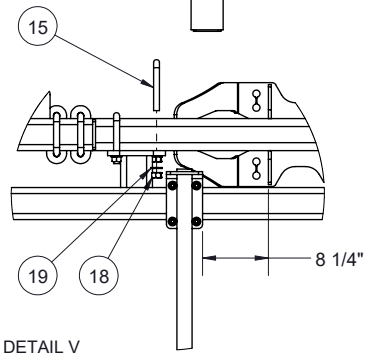

DETAIL V
SCALE 2 : 35

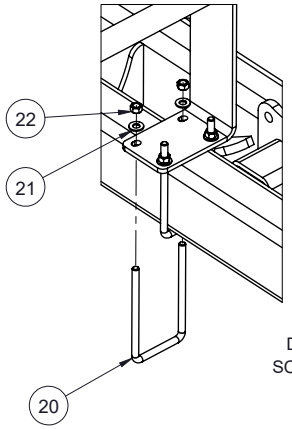

DETAIL S
SCALE 1 : 10

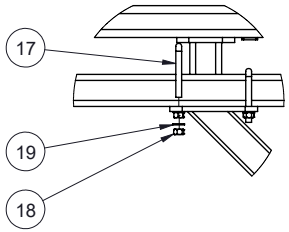

DETAIL T
SCALE 2 : 35

Parts Description:

Fan - UltraPro II 360/350 BU Tank

Part No. 406404

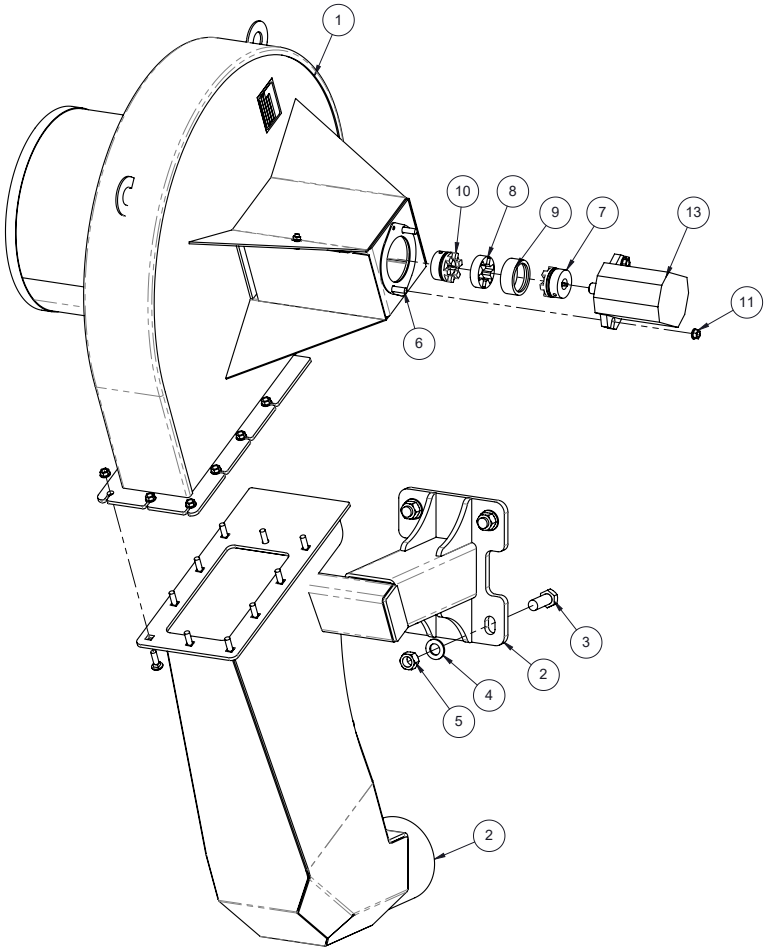

ITEM	QTY.	PART NO.	DESCRIPTION
1	1	255920	FAN - S3 - RT-176 C/W MOTOR MNT
2	1	406575-2	ASSY, FAN BOX - ULTRAPRO II - 360 BU TANK - YEL
3	4	250014	BOLT, HEX - 3/4 X 2 IN UNC GR5 PL
4	4	250552	WASHER, FLAT - 3/4 IN GR8 PL
5	4	250451	NUT, HEX - 3/4 UNC GR5 PL
6	3	250019	BOLT, HEX - 3/8 X 1 1/4 IN UNC GR5 PL
7	1	255930	COUPLER, JAW - QUICKFLEX - S3 FAN - 3/4 SHAFT
8	1	255932	COUPLER, INSERT - QUICKFLEX - WHITE - S3 FAN
9	1	255933	COUPLER, COVER - QUICKFLEX - S3 FAN
10	1	255931	COUPLER, JAW - QUICKFLEX - S3 FAN - 1 IN SHAFT
11	11	250400	NUT, FLANGE - 3/8 UNC PL
12	9	250101	BOLT, CARRIAGE - 3/8 X 1 1/4 IN UNC GR5 PL
13	1	258404	MOTOR, HYD - 6 IN FAN - SAUER-DANFOSS - 11CC - 3/4 OUTPUT
14	1	255910	GAUGE, PRESSURE - AIR - P734 2.5 0-36 OUNCES 1/4LM BRASS
15	1	260090	HOSE BARB, 1/4 FPT X 1/4 HB

Parts Description:

Drive Motor Mount - Ultrapro II

Part No. 412200

ITEM	QTY.	PART NO.	DESCRIPTION
1	1	412220	ASSY, DRIVE MOTOR MOUNT - ULTRAPRO II
2	1	501697	ASSY, SPROCKET - 40T20 - X SERIES HUB - 5/8 HEX BORE - PLATING
3	1	400965	IDLER, BUSHING - CHAIN - 75D - 1 1/2OD X 7/16 ID X 2 3/8 IN
4	1	260717	MOTOR, HYD - METER DRIVE - RAVEN 3/4 HEX DRIVE
5	1	260718	VALVE, PWM - OMNISEED - C/W MANIFOLD - RAVEN
6	1	250241	BOLT, U-SQ - 3/8 UNC X 3 ID X 4 IN - 1 1/2 IN THD - GR5 PL
7	1	250503	NUT, LOCK - 3/8 UNC - STOVER - PL
8	1	250072	BOLT, HEX 3/8 X 3 IN GR5 PL
9	1	260723	ADAPTER, HEX - 7/8-M X 5/8-F
10	1	501687-2	SHAFT, HEX 5/8 X 4 1/2" - STAINLESS - NOVA CHAIN REDUCTION - HOLES
11	3	250507	NUT, LOCK - 1/4 UNC - STOVER - PL
12	5	250559	WASHER, FLAT - 1/4 IN - PL
13	3	250081	BOLT, HEX 1/4 X 1 3/4 IN - GR5 PL
14	2	250077	BOLT, HEX 3/8 X 2 1/2 IN GR5 PL
15	4	250453	NUT, HEX - 3/8 UNC PL
16	6	250557	WASHER, FLAT - 3/8 IN GR8 PL
17	1	501696	ASSY, SPROCKET - 40T26 - X SERIES HUB - 5/8 HEX BORE - PLATE

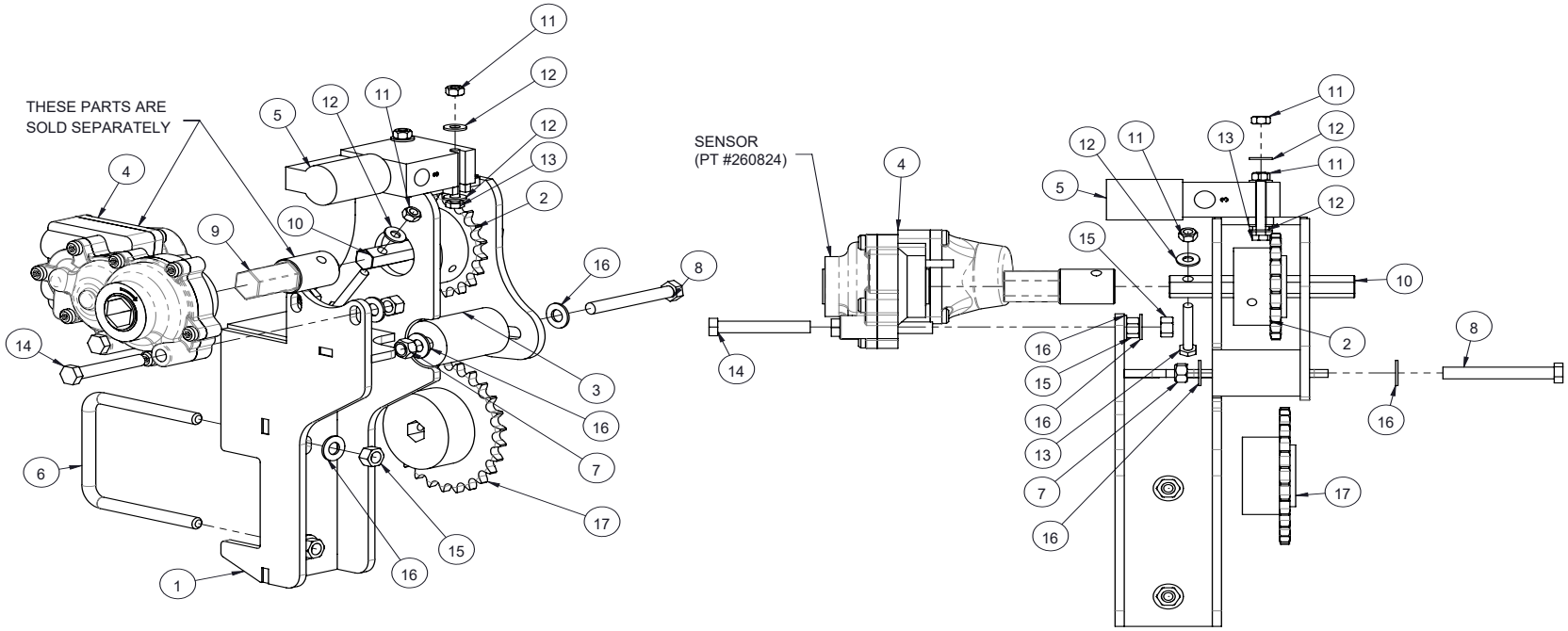

Parts Description:

Drive Cluster Mount - Ultrapro II

Part No. 412250

ITEM	QTY.	PART NO.	DESCRIPTION
1	1	412260	ASSY, DRIVE CLUSTER - ULTRAPRO II
2	2	250708	5/8 HEX BEARING FLUSH MOUNT - LUTCO
3	1	501693	SPROCKET - 40T15 - W SERIES HUB - 5/8 HEX BORE
4	4	250618	BUSH, SHOULDER - PLASTIC - 1/2ID X 5/8OD - IGUS M
5	1	250576	WASHER, FLAT - 1/2 IN SS
6	3	250649	RETAINING RING, E-TYPE 1/2 IN - STAINLESS STEEL
7	1	250072	BOLT, HEX 3/8 X 3 IN GR5 PL
8	1	250503	NUT, LOCK - 3/8 UNC - STOVER - PL
9	1	250241	BOLT, U-SQ - 3/8 UNC X 3 ID X 4 IN - 1 1/2 IN THD - GR5 PL
10	4	250557	WASHER, FLAT - 3/8 IN GR8 PL
11	2	250453	NUT, HEX - 3/8 UNC PL
12	1	250680	RETAINING RING, E-TYPE 1/4 IN - STAINLESS STEEL
13	1	260509	CYL, AIR - 1 X 1 - PARKER - 1.06DPSRS X 1.00
14	1	412270-2	ASSY, PIVOT ARM - ULTRAPRO II - SS
15	1	250675-1	GEAR, IDLER - STEEL - NOVA METER
16	2	501891-1	ASSY, HUB - COMPLETE ROLLER - NOVA METER
17	1	400965	IDLER, BUSHING - CHAIN - 75D - 1 1/2OD X 7/16 ID X 2
18	1	250682	COLLAR, SFT 3/4 IN - SET SCREW - PLATED
19	1	260521	ELBOW, 90D - 1/8 NPT M X 1/4IN PUSH ON - AIR
20	1	260506	CLEVIS, ROD - AIR CYLINDER - IGUS GERI-05
21	1	260507	CLEVIS PIN, AIR CYLINDER - IGUS GEFM-08
22	1	412275	ASSY, DRIVE CLUSTER SHAFT - ULTRAPRO II - SS

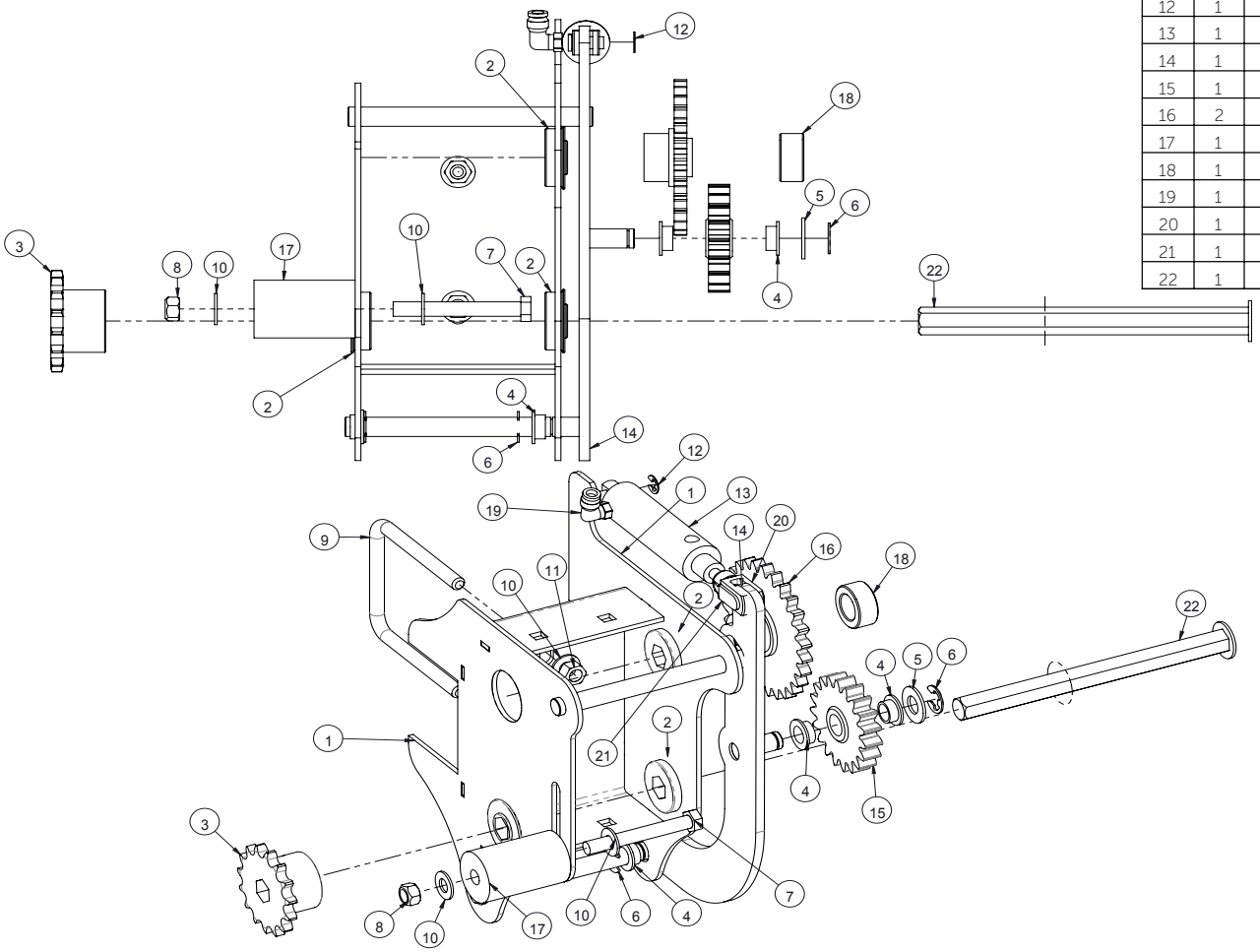

Parts Description:
Meter - UltraPro II

ITEM	QTY.	PART NO.	DESCRIPTION
1	1	412025-1	ASSY, MAIN METER HOUSING - ULTRAPRO II - SS
2	1	412011	MANIFOLD, VENTURI - ULTRAPRO II - 70D
3	1	412012	GASKET, VENTURI - ULTRAPRO II - PVC FOAM
4	2	412014	SHAFT, DRIVE - ULTRAPRO II - 5/8 HEX - SS
5	4	250643-1	BUSHING, NOVA METER 5/8 HEX - J4
6	2	412015	SPROCKET, ULTRAPRO II - 26T - 5/8 HEX BORE - PLATED
7	2	412016	GEAR, ULTRAPRO II - 25T - 5/8 HEX BORE - PLATED
8	8	250645	RETAINING RING, E-TYPE 5/8 IN - STAINLESS STEEL
9	2	250591	PIN, QUICK/LINCH - 1/4 X 1 1/2 IN EFF.
10	2	412013	SHAFT, RETAINING - 1/2 IN - ULTRAPRO II - SS
11	4	250649	RETAINING RING, E-TYPE 1/2 IN - STAINLESS STEEL
12	4	250665	WASHER, THRUST 1.57 OD X 1.03 ID X 0.038 T - SHIM I
13	1	412103	BDL, STANDARD ROLLER CARTRIDGE - ULTRAPRO II
14	1	412080-1	BDL, TRAY - TUBE SEED GUIDE - ULTRAPRO II
15	1	412065	ASSY, UPPER METER HOUSING - ULTRAPRO II - SS
16	1	412140	BDL, CANOLA ROLLER CARTRIDGE - ULTRAPRO II

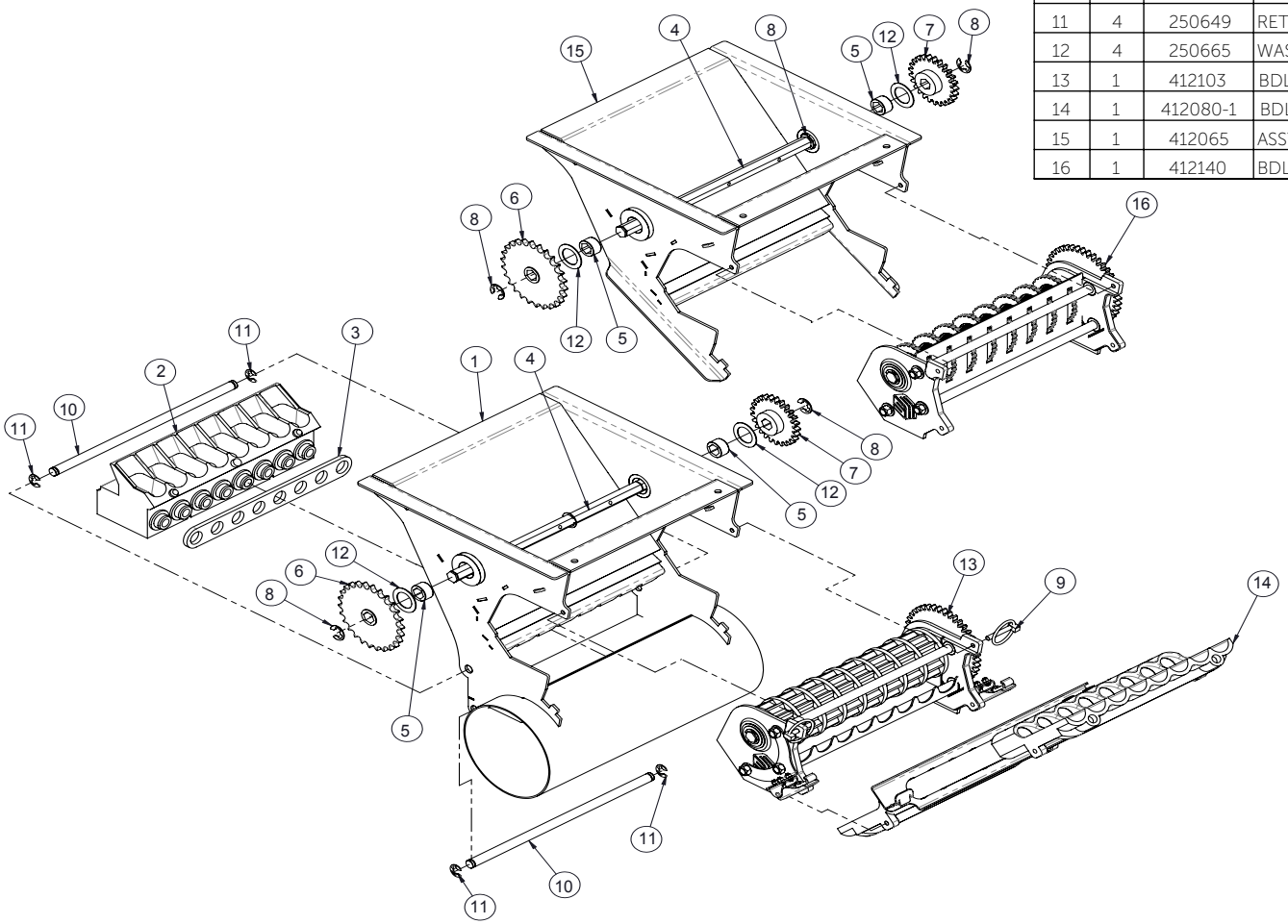

Parts Description:

Standard Roller Cartridge

Part No. 412103 - Standard Roller Cartridge - 8 run

412104 - Standard Roller Cartridge - 7 run

412105 - Standard Roller Cartridge - 6 run

ITEM	QTY.	PART NO.	DESCRIPTION
1	1	412101	ENDPLATE, ULTRAPRO II ROLLER CARTRIDGE - LEFT - 70D
2	6	250557	WASHER, FLAT - 3/8 IN GR8 PL
3	6	250503	NUT, LOCK - 3/8 UNC - STOVER - PL
4	2	250643-1	BUSHING, NOVA METER 5/8 HEX - J4
5	2	250645	RETAINING RING, E-TYPE 5/8 IN - STAINLESS STEEL
6	1	500493	SHEET, 20GA - NOVA METER HEX SHIM - SS
7	2	250665	WASHER, THRUST 1.57 OD X 1.03 ID X 0.038 T - SHIM IGUS M250
8	2	412108	TIE ROD, 1/2 IN - CARTRIDGE - ULTRAPRO II - 3/8 THREADE
9	2	412111	HOUSING, ROLLER END BUSHING - ULTRAPRO II - 1 IN ID
10	1	412102	ENDPLATE, ULTRAPRO II ROLLER CARTRIDGE - RIGHT - 70D
11	1	412112-1	SHAFT, ROLLER - ULTRAPRO II - 5/8 HEX - SS
12	8	412120	ROLLER, METER - ULTRAPRO2 - BLK
13	1	412109	PLATE, 1/4 IN - STANDARD ROLLER END - ULTRAPRO II
14	1	412113	SHEET, 14 GA - STANDARD ROLLER INSERT - ULTRAPRO II
15	1	412110	ASSY, CARTRIDGE BASE PAN - ULTRAPRO II - SS
16	1	412125	GEAR, ULTRAPRO II - 40T - 5/8 HEX BORE - PLATE
17	6	222555	NUT, LOCK - M4 X 0.7 NYLOC
18	6	250515	SCREW, PAN HEAD - #4 x 10 mm
19	2	256626	CLAMP - UNDER CENTER DRAW LATCH UPII - SS
20	1	412593	SHEET, FRMD 14 GA - SEED TUBE CLAMP MOUNT RH
21	1	412594	SHEET, FRMD 14 GA - SEED TUBE CLAMP MOUNT LH - SS
BDL, STANDARD ROLLER CARTRIDGE 7 RUN - 412104 (SUBSTITUTE ITEMS BELOW)			
22	1	412115-2	ASSY, ULTRAPRO II 6 RUN BLOCKER - RIGHT - SS
23	1	250682	COLLAR, SFT 3/4 IN - SET SCREW - PLATED
BDL, STANDARD ROLLER CARTRIDGE 6 RUN - 412105 (SUBSTITUTE ITEMS BELOW)			
22	1	412115-2	ASSY, ULTRAPRO II 6 RUN BLOCKER - RIGHT - SS
23	1	250682	COLLAR, SFT 3/4 IN - SET SCREW - PLATED
24	1	412116-2	ASSY, ULTRAPRO II 6 RUN BLOCKER - LEFT - SS

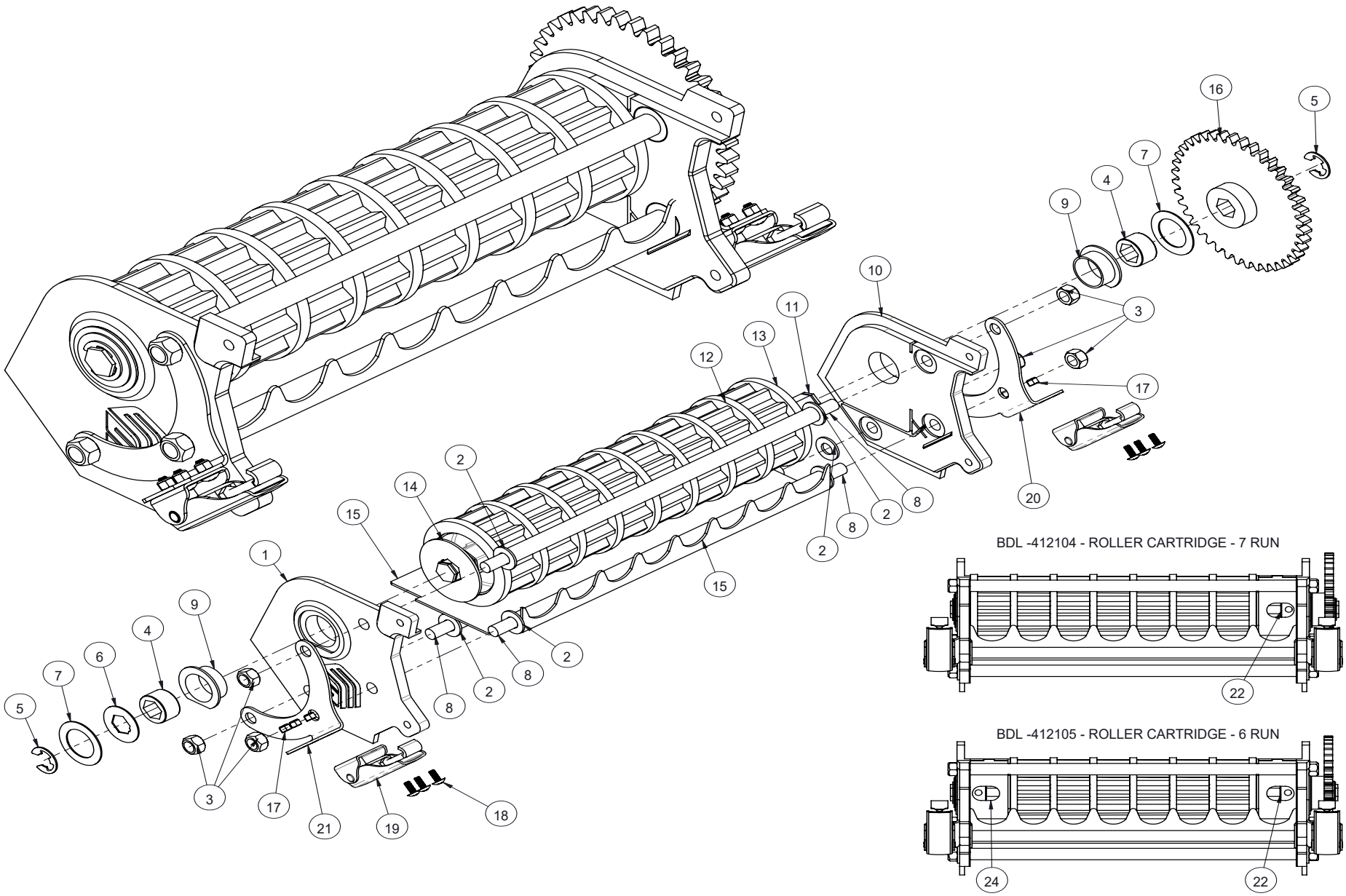
BDL -412104 - ROLLER CARTRIDGE - 7 RUN
BDL -412105 - ROLLER CARTRIDGE - 6 RUN

Parts Description:

Canola Roller Cartridge

Part No. 412140 - Canola Roller Cartridge 8 run

412145 - Canola Roller Cartridge 7 run

412146 - Canola Roller Cartridge 6 run

BDL , CANOLA ROLLER CARTRIDGE 8 RUN - 412140

ITEM	QTY.	PART NO.	DESCRIPTION
1	1	412101	ENDPLATE, ULTRAPRO II ROLLER CARTRIDGE - LEFT - 70D
2	3	412108	TIE ROD, 1/2 IN - CARTRIDGE - ULTRAPRO II - 3/8 THREADED ENDS
3	12	250557	WASHER, FLAT - 3/8 IN GR8 PL
4	6	250503	NUT, LOCK - 3/8 UNC - STOVER - PL
5	2	412111	HOUSING, ROLLER END BUSHING - ULTRAPRO II - 1 IN ID - SS
6	1	412149-1	ASSY, CARTRIDGE BASE PAN - CANOLA - ULTRAPRO II - SS
7	1	412102	ENDPLATE, ULTRAPRO II ROLLER CARTRIDGE - RIGHT - 70D
8	1	412112-1	SHAFT, ROLLER - ULTRAPRO II - 5/8 HEX - SS
9	2	250643-1	BUSHING, NOVA METER 5/8 HEX - J4
10	2	250645	RETAINING RING, E-TYPE 5/8 IN - STAINLESS STEEL
11	1	500493	SHEET, 20GA - NOVA METER HEX SHIM - SS
12	2	250665	WASHER, THRUST 1.57 OD X 1.03 ID X 0.038 T - SHIM IGUS M250
13	8	412150	PLATE, ROLLER - ULTRA PRO - 1/4 IN - UHMW
14	2	250682	COLLAR, SFT 3/4 IN - SET SCREW - PLATED
15	1	412125	GEAR, ULTRAPRO II - 40T - 5/8 HEX BORE - PLATE

BDL , CANOLA ROLLER CARTRIDGE 7 RUN - 412145 (SUBSTITUTE ITEMS BELOW)

ITEM	QTY.	PART NO.	DESCRIPTION
6	1	412141-2	SHEET, FRMD 14GA - LOW RATE CARTRIDGE BODY - ULTRAPRO II

BDL , CANOLA ROLLER CARTRIDGE 6 RUN - 412146 (SUBSTITUTE ITEMS BELOW)

ITEM	QTY.	PART NO.	DESCRIPTION
6	1	412141-2	SHEET, FRMD 14GA - LOW RATE CARTRIDGE BODY - ULTRAPRO II

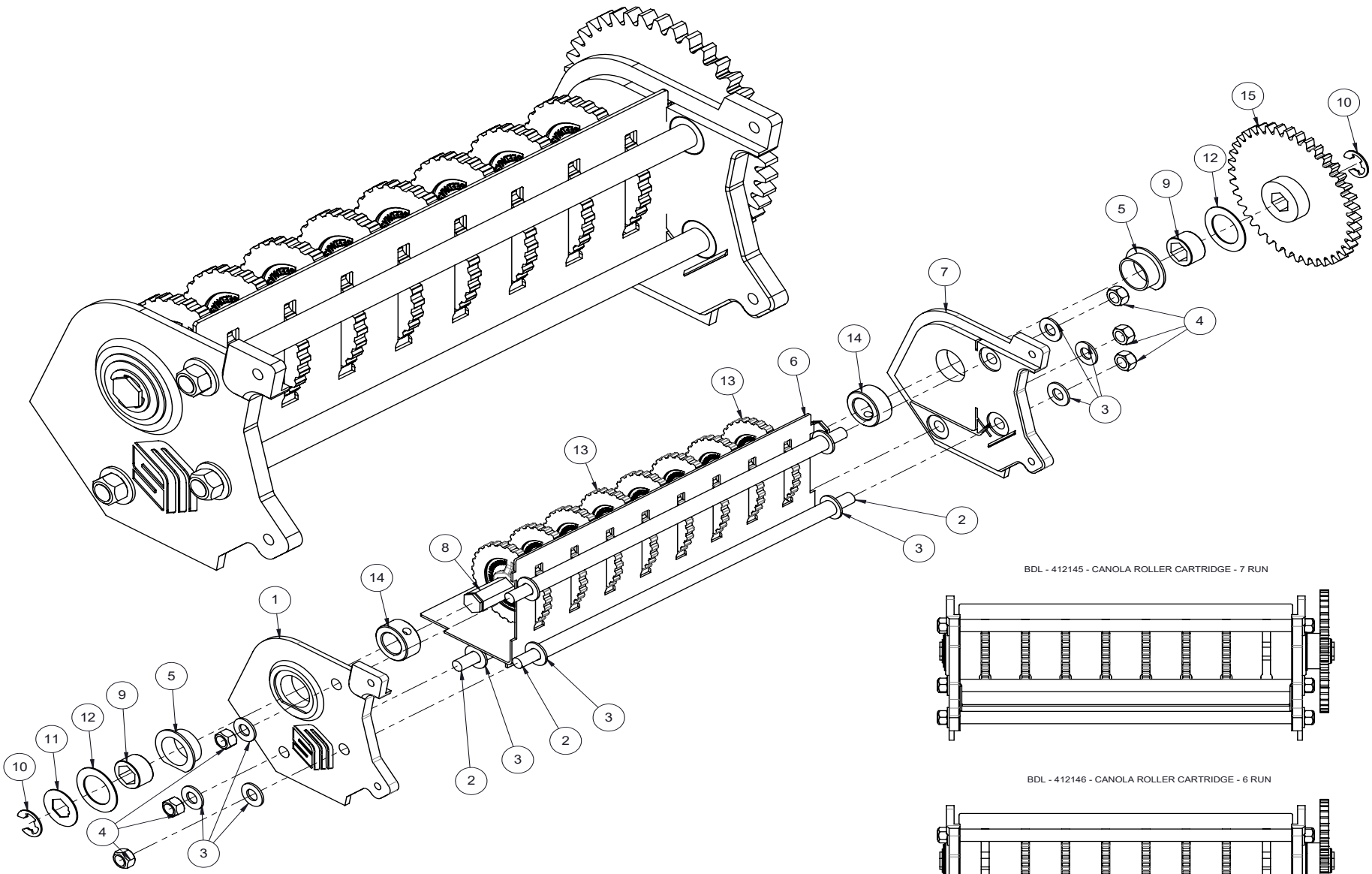

BDL - 412145 - CANOLA ROLLER CARTRIDGE - 7 RUN

BDL - 412146 - CANOLA ROLLER CARTRIDGE - 6 RUN

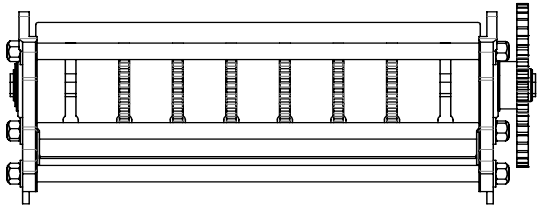

Parts Description:

Compressed Air System Ultrapro II

Part No. 402114-5

ITEM	QTY.	PART NO.	DESCRIPTION
1	1	402137-1	ASSY, COMPRESSOR MOUNT - PACBRAKE - BLK
2	1	402118-3	PLATE, FRMD 10 GA IN - COVER - COMPRESSOR RELAY
3	1	402115-7	PLATE, FRMD 1/4 IN - AIR TANK MOUNT - ZONE COMMAND
4	2	402113	PLATE, BOLT 1/4 IN - AIR TANK MOUNT - ZONE COMMAND
5	8	250036	BOLT, HEX 3/8 X 1 IN GR5 PL
6	4	250092	BOLT, HEX 3/8 X 5 1/2 IN GR5 PL
7	2	250106	BOLT, CARRIAGE - 5/16 X 3/4 IN UNC GR5 PL
8	2	250403	NUT, FLANGE - 5/16 UNC PL
9	12	250453	NUT, HEX - 3/8 UNC PL
10	16	250557	WASHER, FLAT - 3/8 IN GR8 PL
11	2	250213	BOLT, U-SQ - 1/2 UNC X 6ID X 5 1/2 IN - 2 IN THD - GR5 PL
12	4	250555	WASHER, FLAT - 1/2 IN - GR8 - PL
13	4	250450	NUT, HEX 1/2 UNC GR5 PL
14	6	250033	BOLT, HEX 1/4 X 1 IN GR5 PL
15	10	250559	WASHER, FLAT - 1/4 IN PL
16	4	250458	NUT, HEX - 1/4 UNC PL
17	1	257112	COMPRESSOR, KIT - 12VDC - PACBRAKE #HP10626
18	1	257109	FILTER, COMPRESSOR INTAKE - HOUSING W/FILTER
19	1	260570	ADAPTOR, BRASS - REDUCER - 3/8 MPT X 1/2 FPT
20	1	260571	ADAPTOR, BRASS - 1/2 MPT X 3/4 HB
21	1	256527	HOSE, RUBBER 3/4 IN (200 PSI)
22	1	260490	SCREEN, PRE-FILTER, COMPRESSOR INTAKE
23	1	260520	CONNECTOR, 3/8 NPT M X 3/8 PUSH ON - AIR
24	1	260535	ADAPTOR, BRASS - CROSS - 3/8 MPT - FEMALE
25	1	260574	FILTER, PARTICULATE - 14F15BB
26	1	260573	DRYER DESICCANT - WILKERSON - X06-02-000
27	1	402132	SHEET, FRMD 10 GA - MOUNT PLATE - FRT - BLK
28	1	402129	SHEET, FRMD 10 GA - MOUNT PLATE - REAR - BLK
29	1	260503	REGULATOR/FILTER, AIR - PARKER - ZONE COMMAND
30	1	260551	GAUGE, AIR - 1/8 NPT M - 0 - 160 PSI
31	1	260516	CONNECTOR - 1/4 NPT M X 3/8 PUSH ON - AIR
32	4	260576	ADAPTOR, BRASS - NIPPLE - 1/4 NPT
33	1	260575	FILTER, COALESCING - 10F15ED
34	1	260526	ADAPTOR, BRASS - HEX NIPPLE - 3/8 MPT x 1/4 MPT
35	2	250573	BOLT, HEX - 1/4 X 4 1/2 UNC - GR5 - PL
36	4	250507	NUT, LOCK - 1/4 UNC - STOVER - PL
37	1	257108	TANK, AIR - 5 GAL
38	1	260513	AUTOMATIC DRIP LEG DRAIN - 1/4 IN - 06D1NA - PARKER
39	1	402159	PLATE, FRMD 1/4 IN - MOUNT - AIR TANK - BLK

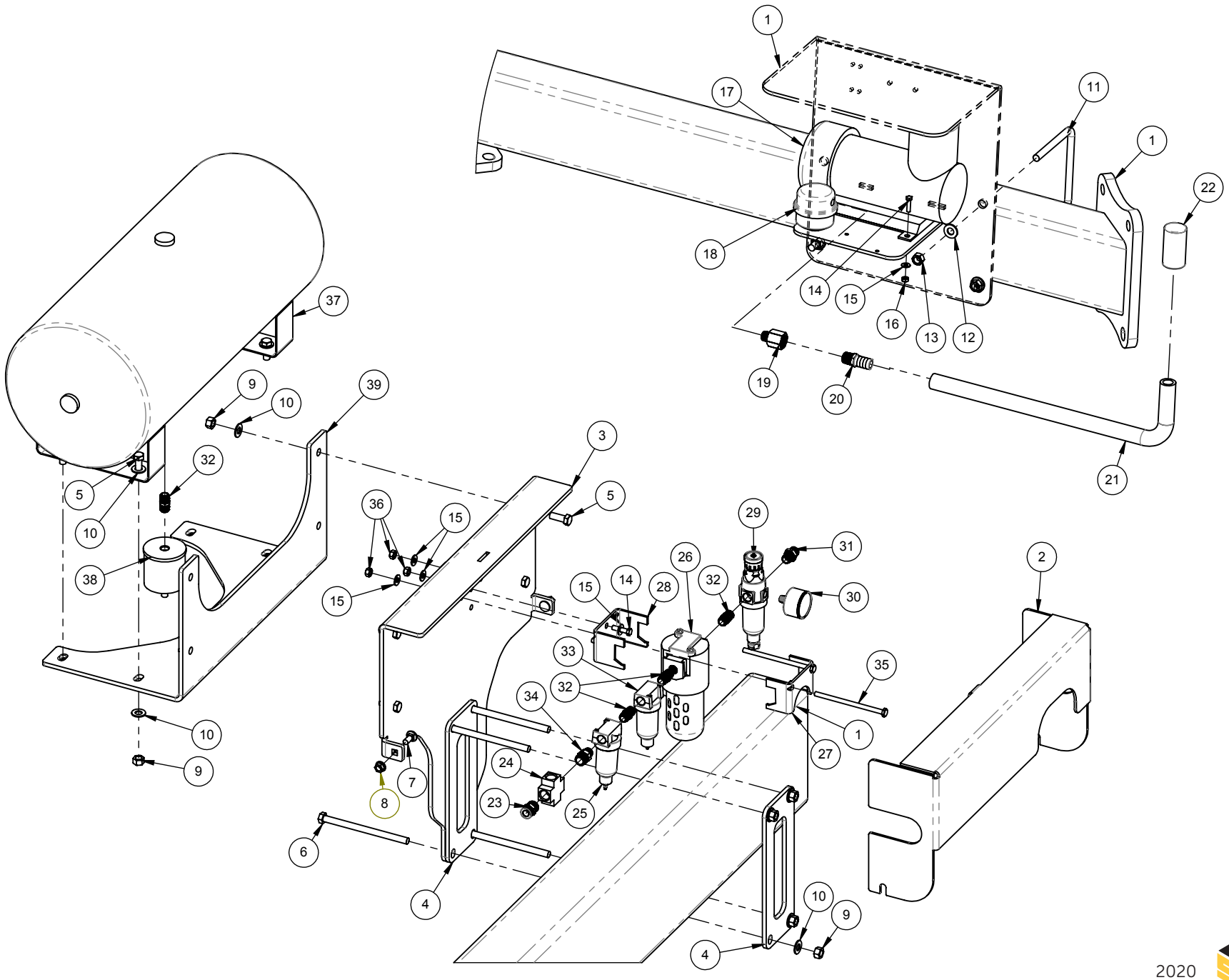
1
17
11
1
22
18
14
15
16
13
12
19
20
21
37
9
10
39
32
5
10
38
36
15
15
3
5
29
31
26
32
30
2
15
14
28
33
32
34
35
1
27
24
23
25
7
8
6
4
10
9
4

Parts Description:
Air/Electric Housing

BDL, AIR/ELEC CONTROL HOUSING SXX045 - 410445-1

ITEM	QTY.	PART NO.	DESCRIPTION
1	1	500597-3	PLATE, FRMD 10GA - AIR/ELEC HOUSING
2	1	500602-4	PLATE, FRMD 10GA - PANEL COVER - AIR/ELEC HOUSING
3	2	250694	PURCH. - STANLEY 4X4 IN SS HINGE
4	2	250693	LATCH, PULL T-HANDLE DRAW AND KEEPER
5	8	250633	SCREW, MACHINE 10-32 X 1 IN - PLATED
6	8	250679	WASHER, 10-32 PL
7	8	250634	NUT, MACHINE 10-32 - PLATED
8	8	250122	BOLT, HEX 1/4 X 3/4 IN GR5 PL
9	8	250559	WASHER, FLAT - 1/4 IN PL
10	8	250507	NUT, LOCK - 1/4 UNC - STOVER - PL
11	4	250229	BOLT, U-SQ - 1/2 UNC X 4ID X 4 IN - 2 IN THD - GR5 PL
12	8	250555	WASHER, FLAT - 1/2 IN - GR8 - PL
13	8	250450	NUT, HEX 1/2 UNC GR5 PL

BDL, AIR/ELEC CONTROL HOUSING - FRT CANOLA TANK (502502-1)

ITEM	QTY.	PART NO.	DESCRIPTION
1	1	502500-1	ASSY, TANK PANEL MOUNT - YEL
2	2	250208	BOLT, U-SQ - 1/2 UNC X 4 ID X 5 IN - 2 IN THD - GR8 PL
3	8	250555	WASHER, FLAT - 1/2 IN - GR8 - PL
4	8	250450	NUT, HEX 1/2 UNC GR5 PL
5	4	250001	BOLT, HEX 1/2 X 1 1/2 IN GR5 PL
6	1	500597-3	PLATE, FRMD 10GA - AIR/ELEC HOUSING
7	1	500602-4	PLATE, FRMD 10GA - PANEL COVER - AIR/ELEC HO
8	2	250694	PURCH. - STANLEY 4X4 IN SS HINGE
9	2	250693	LATCH, PULL T-HANDLE DRAW AND KEEPER
10	8	250633	SCREW, MACHINE 10-32 X 1 IN - PLATED
11	8	250679	WASHER, 10-32 PL
12	8	250634	NUT, MACHINE 10-32 - PLATED
13	8	250122	BOLT, HEX 1/4 X 3/4 IN GR5 PL
14	8	250559	WASHER, FLAT - 1/4 IN PL
15	8	250507	NUT, LOCK - 1/4 UNC - STOVER - PL

BDL, AIR/ELEC CONTROL HOUSING - SXX (405950)

ITEM	QTY.	PART NO.	DESCRIPTION
1	2	405955-1	ASSY, BRACKET - HYD ELEC HOUSING - SXX345/SX
2	1	500597-3	PLATE, FRMD 10GA - AIR/ELEC HOUSING
3	1	500602-4	PLATE, FRMD 10GA - PANEL COVER - AIR/ELEC HOU
4	2	250694	PURCH. - STANLEY 4X4 IN SS HINGE
5	4	250693	LATCH, PULL T-HANDLE DRAW AND KEEPER
6	8	250129	MACHINE SCREW - #8-32
7	8	250182	WASHER, FLAT - M8
8	8	250634	NUT, MACHINE 10-32 - PLATED
9	8	250122	BOLT, HEX 1/4 X 3/4 IN GR5 PL
10	8	250559	WASHER, FLAT - 1/4 IN PL
11	8	250507	NUT, LOCK - 1/4 UNC - STOVER - PL
12	4	250001	BOLT, HEX 1/2 X 1 1/2 IN GR5 PL
13	10	250450	NUT, HEX 1/2 UNC GR5 PL
14	10	250555	WASHER, FLAT - 1/2 IN - GR8 - PL
15	6	250013	BOLT, HEX 1/2 X 1 1/4 IN GR5 PL

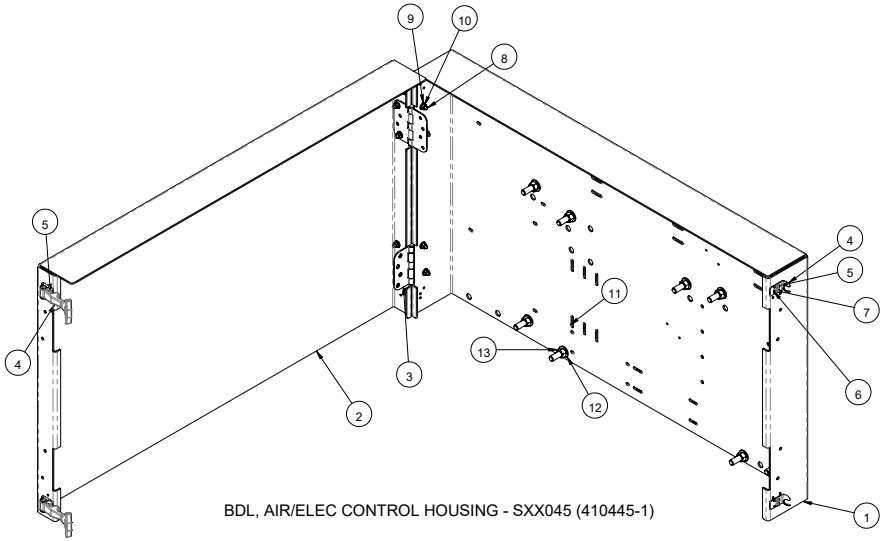

BDL, AIR/ELEC CONTROL HOUSING - SXX045 (410445-1)

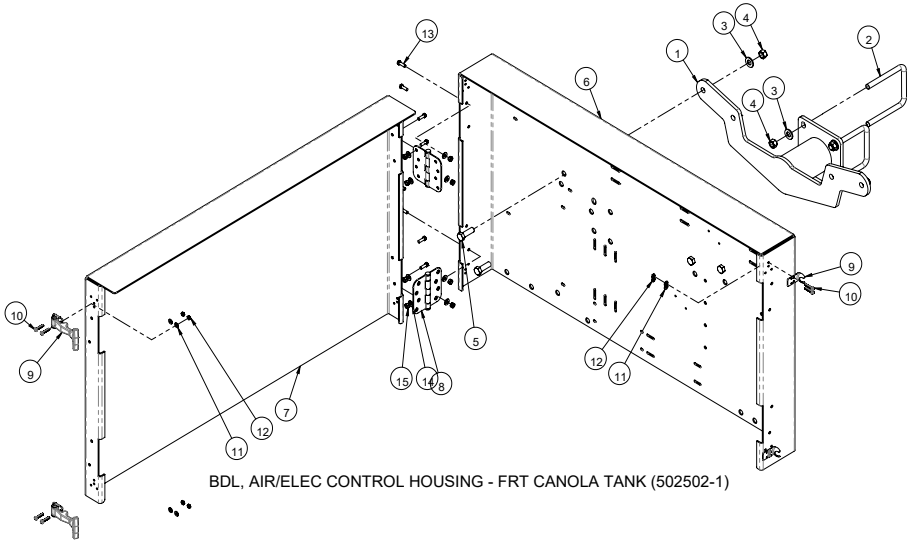

BDL, AIR/ELEC CONTROL HOUSING - FRT CANOLA TANK (502502-1)

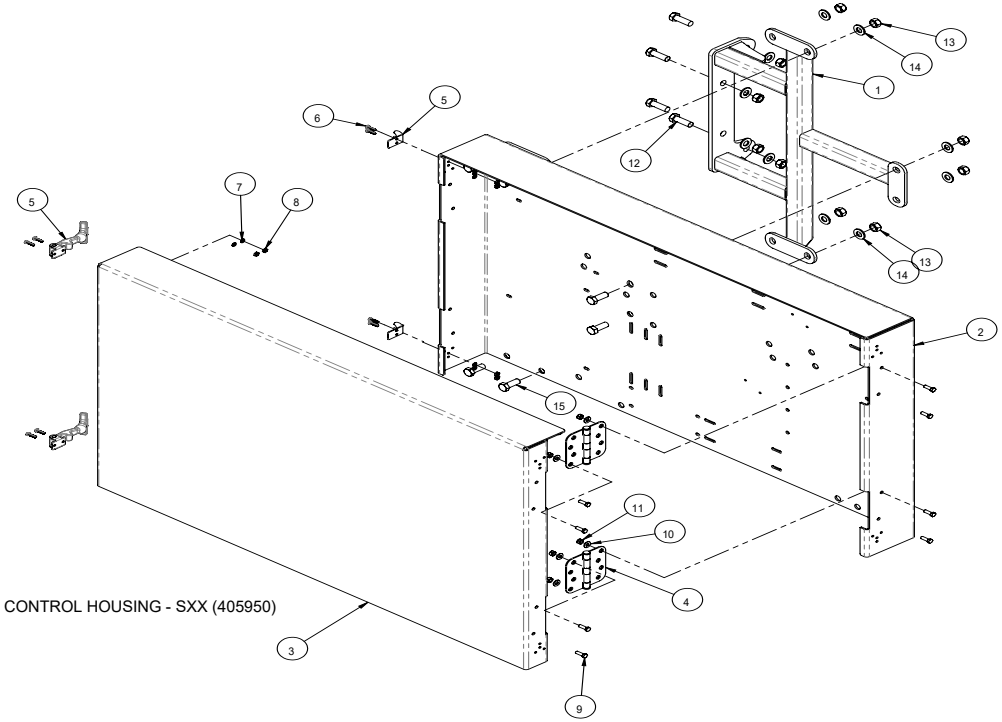

BDL, AIR/ELEC CONTROL HOUSING - SXX (405950)

Parts Description:
Bag Lift

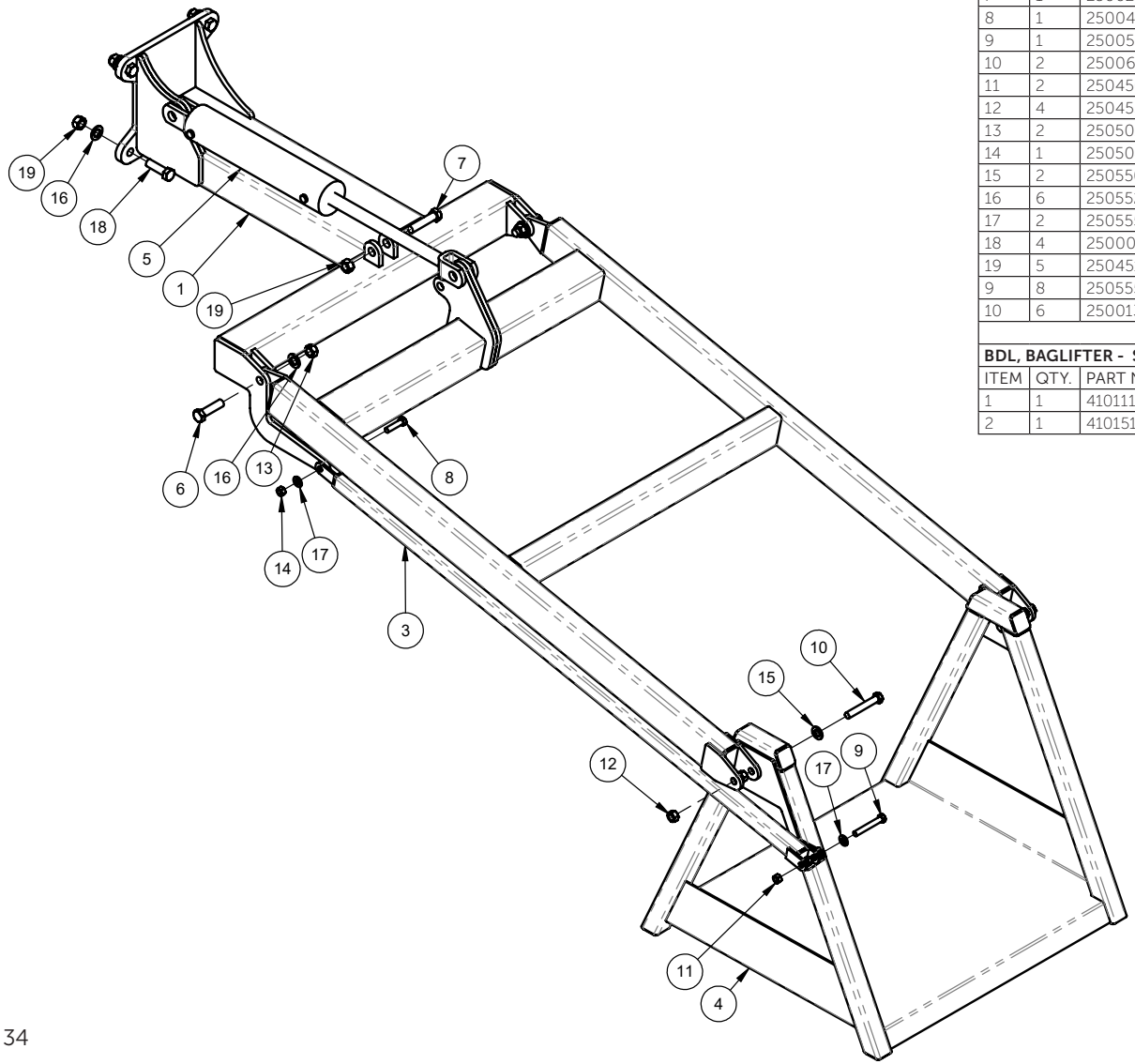

BDL, BAGLIFTER-SXX304-SXG555 - SXG424 / 604 / UltraPro II - 410100			
ITEM	QTY.	PART NO.	DESCRIPTION
1	1	410110	ASSY, BAGLIFTER BASE - SXX304
2	1	410150	ASSY, BAGLIFTER LINK ASSEMBLY - SXX304
3	1	410170	ASSY, BAGLIFTER PARALLEL ARM
4	1	410180	ASSY, BAGLIFTER BASKET
5	1	258532	CYL, HYD - 3 IN BORE X 14 IN STROKE
6	2	250004	BOLT, HEX 3/4 X 2 3/4 UNC GR5 PL
7	1	250026	BOLT, HEX 3/4 X 3 1/4 UNC GR5 PL
8	1	250048	BOLT, HEX 1/2 X 2 IN GR5 PL
9	1	250050	BOLT, HEX 1/2 X 3 1/2 IN UNC GR5 PL
10	2	250062	BOLT, HEX 5/8 X 4 UNC GR5 PL
11	2	250450	NUT, HEX 1/2 UNC GR5 PL
12	4	250455	NUT, HEX 5/8 UNC GR5 PL
13	2	250501	NUT, LOCK - 3/4 UNC - STOVER - PL
14	1	250504	NUT, LOCK - 1/2 UNC - STOVER - PL
15	2	250550	WASHER, FLAT 5/8 IN GR8 PL
16	6	250552	WASHER, FLAT 3/4IN GR8 PL
17	2	250555	WASHER, FLAT - 1/2 IN - GR8 - PL
18	4	250003	BOLT, HEX 3/4 X 2 1/2 UNC GR5 PL
19	5	250451	NUT, HEX 3/4 UNC GR5 PL
9	8	250555	WASHER, FLAT - 1/2 IN - GR8 - PL
10	6	250013	BOLT, HEX 1/2 X 1 1/4 IN GR5 PL

BDL, BAGLIFTER - SXX305/SXX345 - 410101 (SUBSTITIUTE ITEMS BELOW)			
ITEM	QTY.	PART NO.	DESCRIPTION
1	1	410111	ASSY, BAGLIFTER BASE MOUNT - SXX305
2	1	410151	ASSY, BAGLIFTER LINK - SXX305

Parts Description:
6" Fan RPM Sensor
Part No. 408210

408210			
ITEM	QTY.	PART NO.	DESCRIPTION
1	1	500842-1	SHEET, RPM SENSOR MOUNT 10 GA - 6IN FAN
2	1	255900	FAN, 6 IN - CRARY CCW
3	1	260703	SENSOR, FAN RPM - RAVEN
4	1	250033	BOLT, HEX 1/4 X 1 IN GR5 PL
5	2	250559	WASHER, FLAT - 1/4 IN - PL
6	1	250507	NUT, LOCK - 1/4 UNC - STOVER - PL
7	2	250019	BOLT, HEX 3/8 X 1 1/4 IN GR5 PL
8	2	250453	NUT, HEX - 3/8 UNC PL

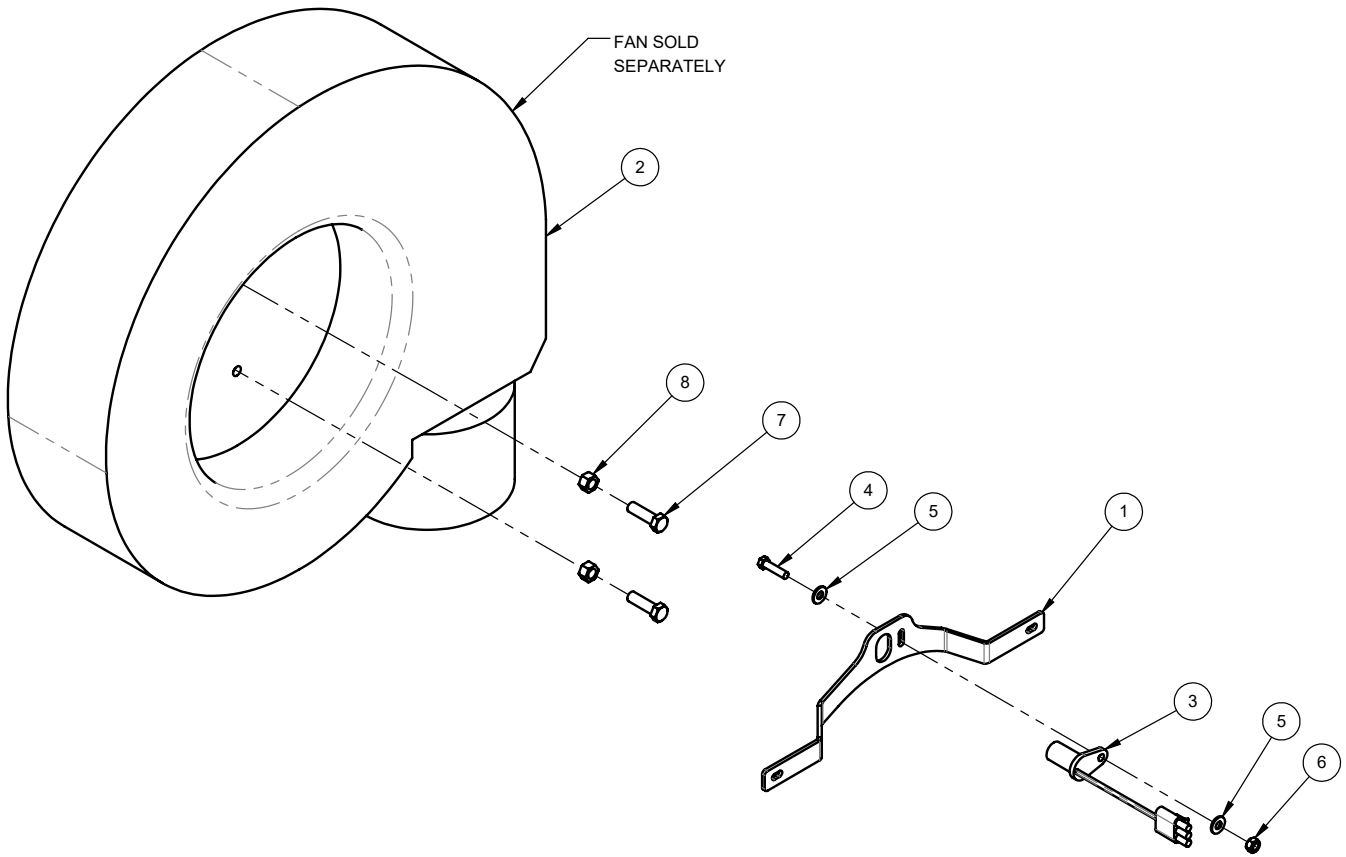

Parts Description:

Meter Drive
UltraPro II 20 BU Tank
Part No. 401622-3

ITEM	PART NO.	QTY.	DESCRIPTION
1	258293	2	HOSE, 3/8-2WB X 132 LOA - 08 JIC F-SW X 06 JIC F-SW
2	258186	1	HOSE, 3/8-2WB X 24LOA - 06 JIC F-SW X 06 JIC F-SW
3	258002	1	ELBOW, 90D - 06 ORB M X 06 JIC M
4	258051	2	CONNECTOR, 06 ORB M X 06 JIC M
5	258005	3	EL, 90D - 06 JIC M X 06 JIC F-SW
6	258053	1	CONNECTOR, 08 ORB M X 06 JIC M
7	258041	1	PLUG, 06 ORB M
8	258025	1	TEE, 06 JIC F-SW X 06 JIC M X 06 JIC M - RUN
9	258038	1	CONNECTOR, 06 JIC F-SW X 1/4 NPT F
10	258385	1	CONNECTOR, 06 ORB M X 08 JIC M
11	257993	1	CONNECTOR, 06 ORB M X 08 JIC F-SW
12	258020	1	TEE, 08 JIC F-SW X 08 JIC M X 08 JIC M - RUN
A	258094	1	GAUGE, PRESSURE - SPG-1500P 1/4 NPT
B	258611	1	FILTER, INLINE-ARROW 9152V-25-VITON SEAL-06 ORB
C	260717	1	MOTOR, HYD - OMNISEED - 7/8 HEX - RAVEN
D	260874	1	VALVE, PWM - OMNISEED - C/W MANIFOLD - MAN. O/R

NOTE: LETTERED COMPONENTS ARE PICKED SEPERATELY FROM HYDRAULIC KIT

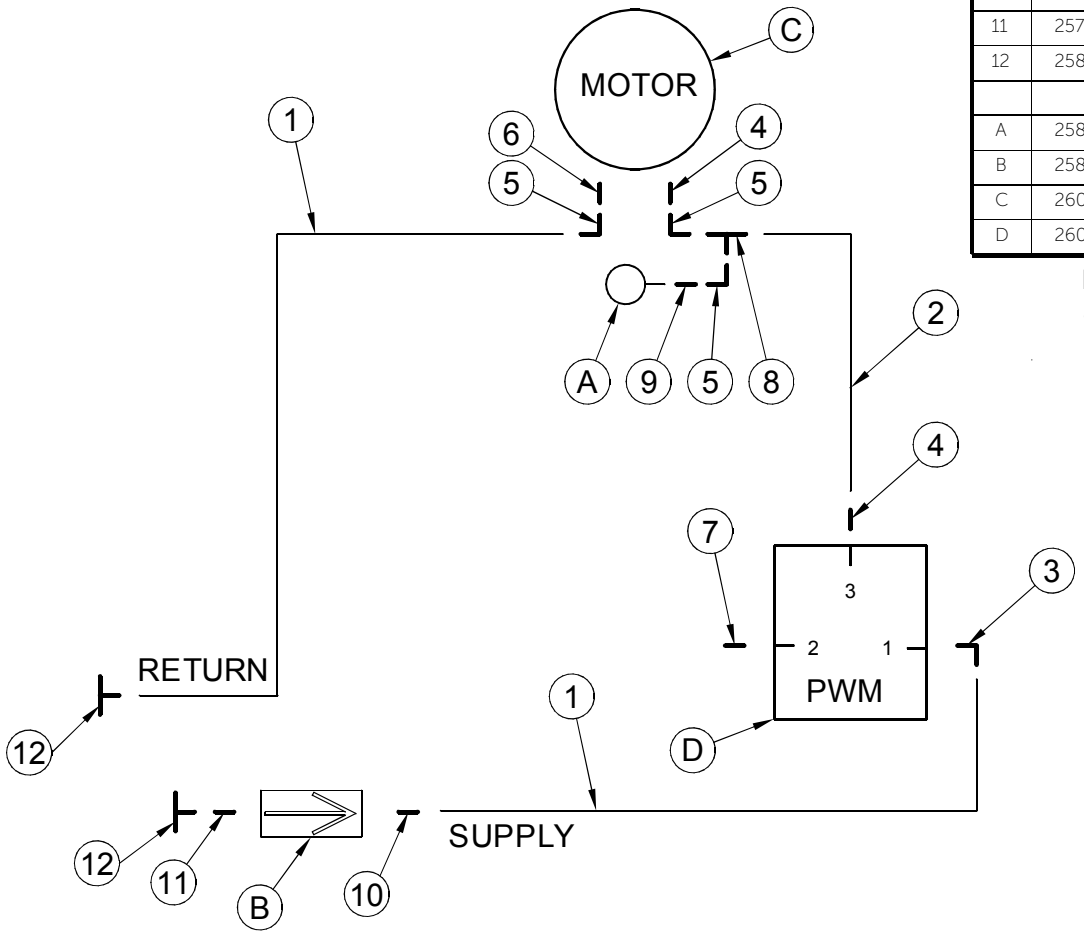

Parts Description:

Fan - UltraPro II - 20 BU Tank

Part No. 401620-3

ITEM	PART NO.	QTY.	DESCRIPTION
1	258312	2	HOSE, 3/4 - 2WB X 340LOA - 12 JIC F-SW X 10 ORB M
2	258079	2	COUPLER, MALE - PIONEER - 10 ORB F
3	258003	2	EL, 90D - 12 JIC M X 10 ORB M
4	258006	1	EL, 90D - 06 ORB M X 08 JIC M
5	258211	1	HOSE, CASE DRAIN - G102R-08 X 168LOA - 08 JIC F-SW
6	258020	1	TEE, 08 JIC F-SW X 08 JIC M X 08 JIC M - RUN
A	257999	1	VALVE, CHECK - IN LINE - 08 JIC M X F - VONBERG - 19
B	260717	1	MOTOR, HYD - OMNISEED - 7/8 HEX - RAVEN

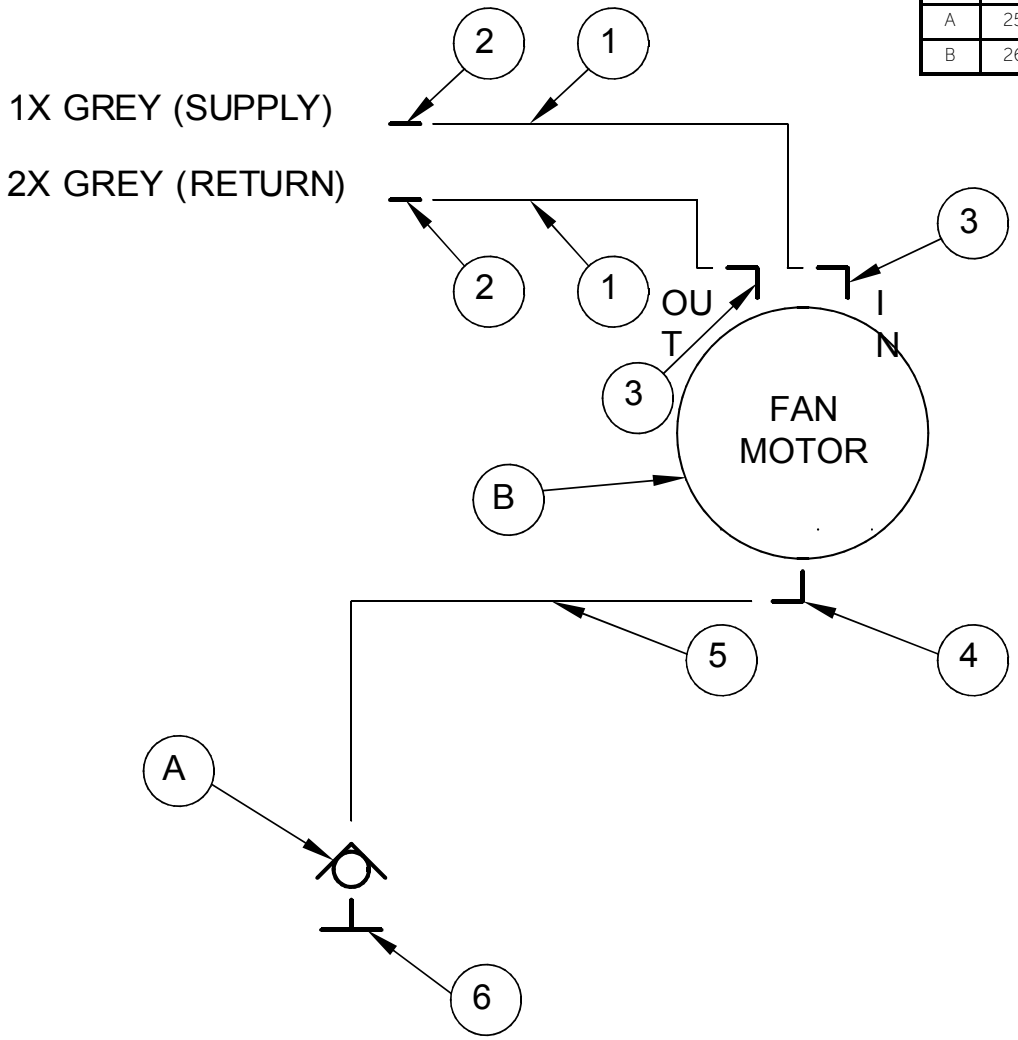

Parts Description:

Meter Drive

UltraPro II 360 BU Tank

Part No. 401257-1

ITEM	PART NO.	QTY.	DESCRIPTION
1	257993	1	CONNECTOR, 06 ORB M X 08 JIC F-SW
2	258028	1	TEE, 08 JIC M X M X M
3	258051	2	CONNECTOR, 06 ORB M X 06 JIC M
4	258050	1	CONNECTOR, 08 ORB M X 08 JIC M
5	258005	3	EL, 90D - 06 JIC M X 06 JIC F-SW
6	258053	1	CONNECTOR, 08 ORB M X 06 JIC M
7	258020	1	TEE, 08 JIC-SW X 08 JIC M X 08 JIC M - RUN
8	258000	2	EL, 90D - 08 JIC M X 08 JIC F-SW
9	258002	3	EL, 90D - 06 JIC M X 06 ORB M
10	258446	2	HOSE, 1/2-2WB X 90LOA - 08 JIC F-SW X 08 JIC F-SW
11	258568	2	HOSE, 3/8-2WB X 255 LOA - 06 JIC F-SW X 08 JIC F-SW
12	258141	2	HOSE, 3/8-2WB X 30 1/2 IN - 06 JIC F-SW X 06JIC F-SW
13	258041	2	PLUG, 06 ORB M
14	258025	2	TEE, 06 JIC F-SW X 06 JIC M X 06 JIC M - RUN
15	258038	2	CONNECTOR, 06 JIC F-SW X 1/4 NPT F
16	258385	1	CONNECTOR, 06 ORB M X 08 JIC M
17	257993	1	CONNECTOR, 06 ORB M X 08 JIC F-SW
A	258094	2	GAUGE, PRESSURE - SPG-1500P 1/4 NPT
B	258611	1	FILTER, INLINE-ARROW 9152V-25 VITON SEAL-06 ORB
C	260717	2	MOTOR, HYD - OMNISEED - 7/8 HEX - RAVEN
D	260874	2	VALVE, PWM - OMNISEED - C/W MANIFOLD - MAN. O/R

NOTE: LETTERED COMPONENTS ARE PICKED SEPERATELY FROM HYDRAULIC KIT

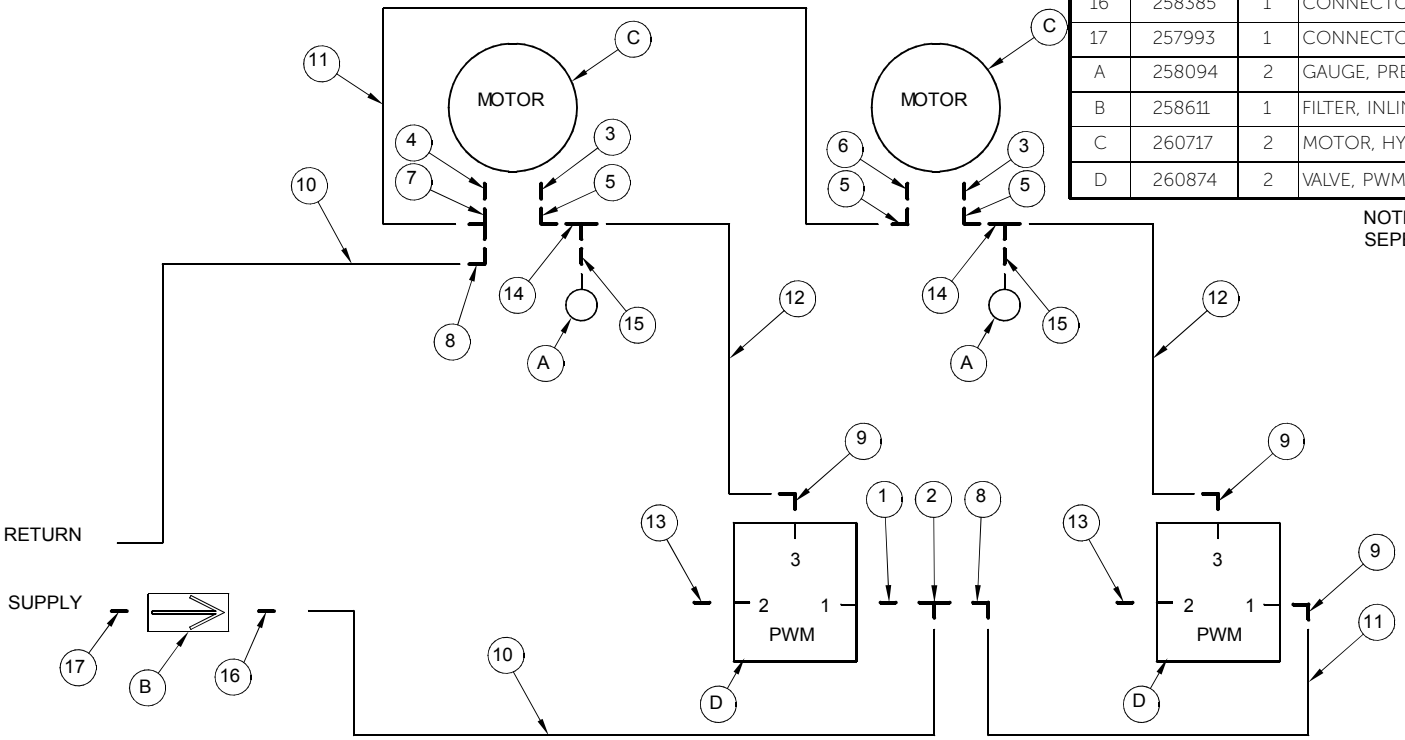

Parts Description:

Fan - UltraPro II -360 BU Tank

Part No. 401258-2

ITEM	PART NO.	QTY.	DESCRIPTION
1	401080-2	2	ASSY, HOSE - 3/4-2WB X 624 LOA - C/W FITTINGS
2	258313	1	HOSE, CASE DRAIN - G102R-08 X 60LOA - 08 JIC F-SW
3	258003	2	EL, 90D - 12 JIC M X 10 ORB M
4	258006	1	EL, 90D - 06 ORB M X 08 JIC M
5	257984	1	UNION, 08 JIC M X 08 JIC M
6	258493-1	1	HOSE, 1/2-2WB X 180LOA - 08JIC F-SW X 08JIC F-SW
A	257999	1	VALVE, CHECK - IN LINE - 08 JIC M X F - VONBERG
B	260717	1	MOTOR, HYD - OMNISEED - 7/8 HEX - RAVEN

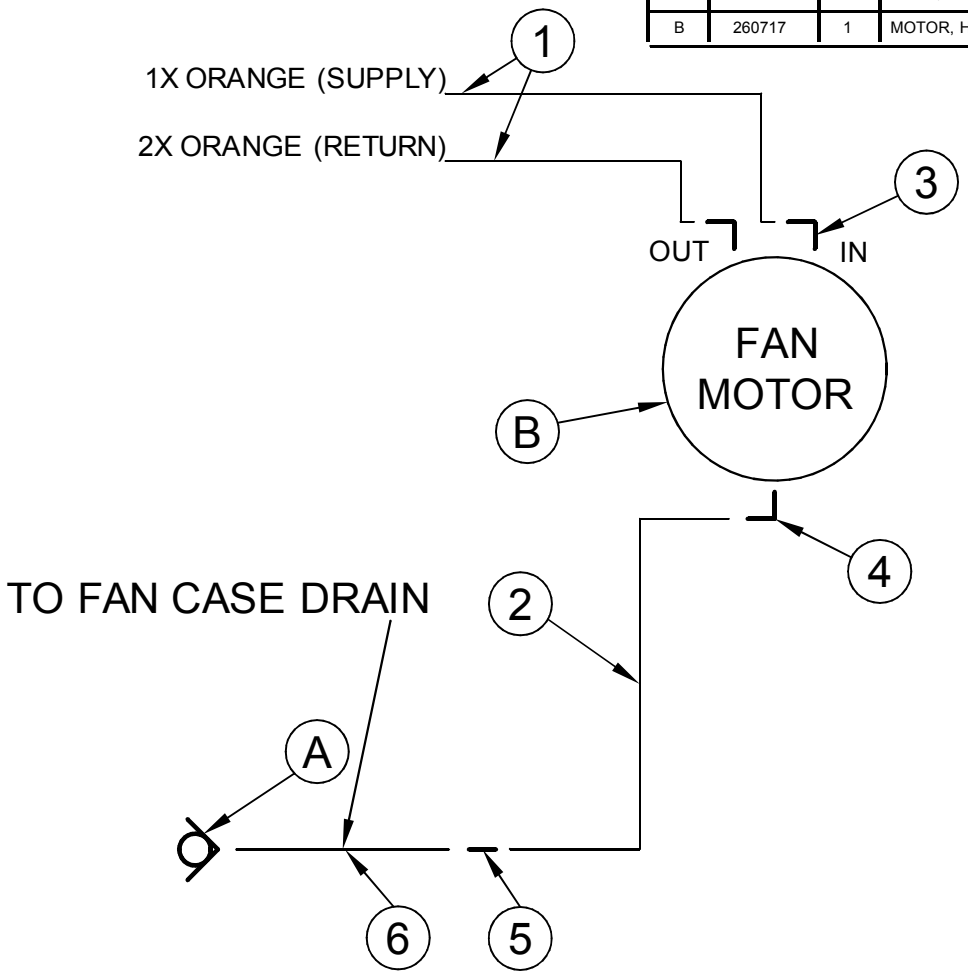

NOTE : LETTERED COMPONENTS ARE PICKED SEPERATELY FROM HYDRAULIC KIT

Parts Description:

Meter Drive
UltraPro II 540 BU Tank
Part No. 414390-2

ITEM	PART NO.	QTY.	DESCRIPTION
1	257993	2	CONNECTOR, 06 ORB M X 08 JIC F-SW
2	258028	2	TEE, 08 JIC M X M X M
3	258051	4	CONNECTOR, 06 ORB M X 06 JIC M
4	258050	1	CONNECTOR, 08 ORB M X 08 JIC M
5	258005	5	EL, 90D - 06 JIC M X 06 JIC F-SW
6	258053	2	CONNECTOR, 08 ORB M X 06 JIC M
7	258020	2	TEE, 08 JIC-SW X 08 JIC M X 08 JIC M - RUN
8	258000	3	EL, 90D - 08 JIC M X 08 JIC F-SW
9	258002	4	EL, 90D - 06 JIC M X 06 ORB M
10	258623	2	HOSE, 1/2-2WB X 100LOA - 08 JIC F-SW X 08 JIC F-SW
11	258622	2	HOSE, 3/8-2WB X 285 LOA - 06 JIC F-SW X 08 JIC F-SW
12	258141	3	HOSE, 3/8-2WB X 30 1/2 IN - 06JIC F-SW X 06JIC F-SW
13	258625	1	HOSE, 3/8-2WB X 49 IN - 06 JIC F-SW X 06 JIC F-SW
14	258041	3	PLUG, 06 ORB M
15	258025	3	TEE, 06 JIC F-SW X 06 JIC M X 06 JIC M - RUN
16	258038	3	CONNECTOR, 06 JIC F-SW X 1/4 NPT F
17	258385	1	CONNECTOR, 06 ORB M X 08 JIC M
18	258049	1	CONNECTOR, 08 JIC F X 06 JIC M
19	258662	1	HOSE, 3/8-2WB X 39 IN - 06 JIC F-SW X 06 JIC F-SW
A	258094	3	GAUGE, PRESSURE - SPG-1500P 1/4 NPT
B	258611	1	FILTER, INLINE-ARROW 9152V-25 VITON SEAL-06 ORB
C	260717	3	MOTOR, HYD - OMNISEED - 7/8 HEX - RAVEN
D	260874	3	VALVE, PWM - OMNISEED - C/W MANIFOLD - MAN O/R

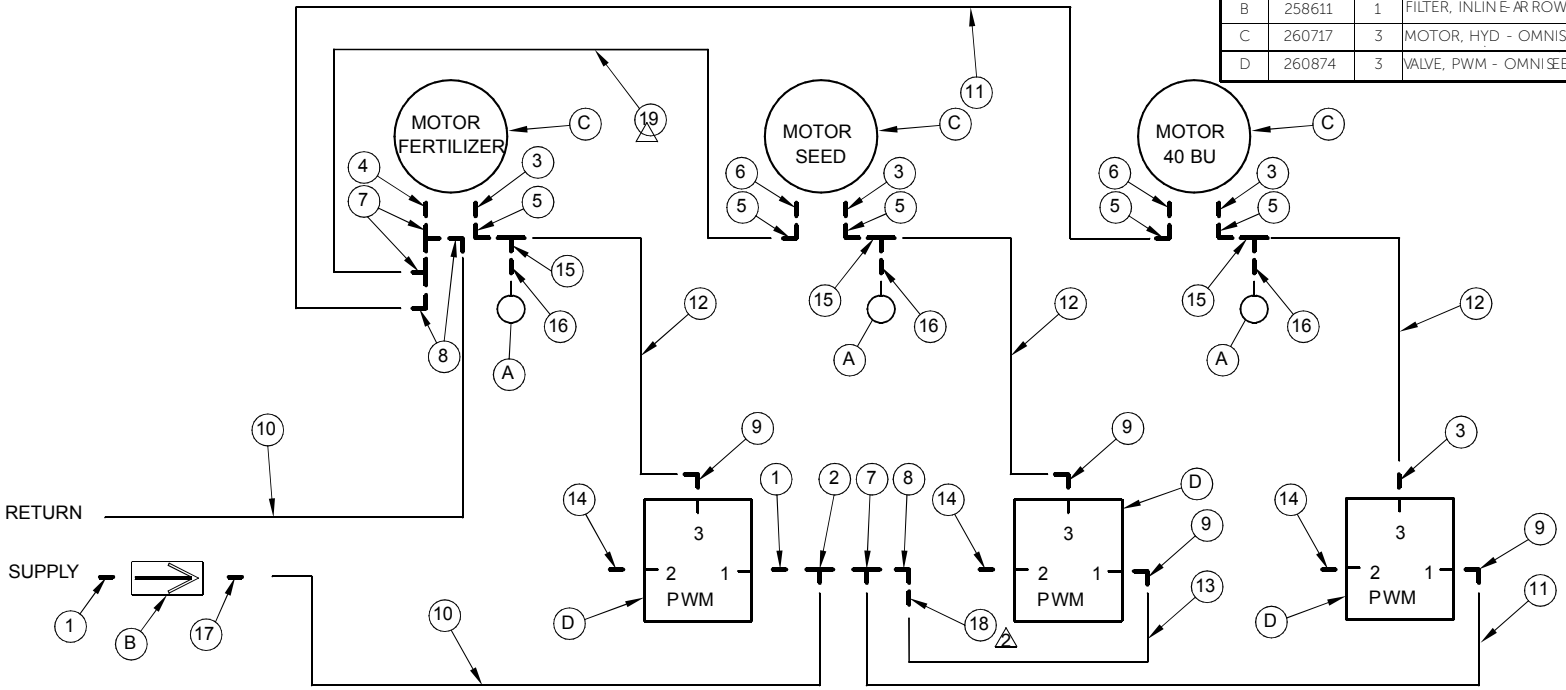

Parts Description:

Fan - UltraPro II - 540 BU Tank

Part No. 414380-1

ITEM	PART NO.	QTY.	DESCRIPTION
1	401748-1	4	ASSY, HOSE - 3/4-2WB X 700 LOA - C/W FITTINGS
2	258624	1	HOSE, 1/2-2WB X 57LOA - 08 JIC F-SW X 08 JIC F-SW
3	258211	2	HOSE, CASE DRAIN - G102R-08 X 168 LOA - 08 JIC F-S
4	258000	1	EL, 90D - 08 JIC M X 08 JIC F-SW
5	258003	4	EL, 90D - 12 JIC M X 10 ORB M
6	258006	2	EL, 90D - 06 ORB M X 08 JIC M
7	258028	1	TEE, 08 JIC M X M X M
8	257984	1	UNION, 08 JIC M X 08 JIC M
A	257999	2	VALVE, CHECK - IN LINE - 08 JIC M X F - VON BERG
B	260717	2	MOTOR, HYD - OMNISEED - 7/8 HEX - RAVEN

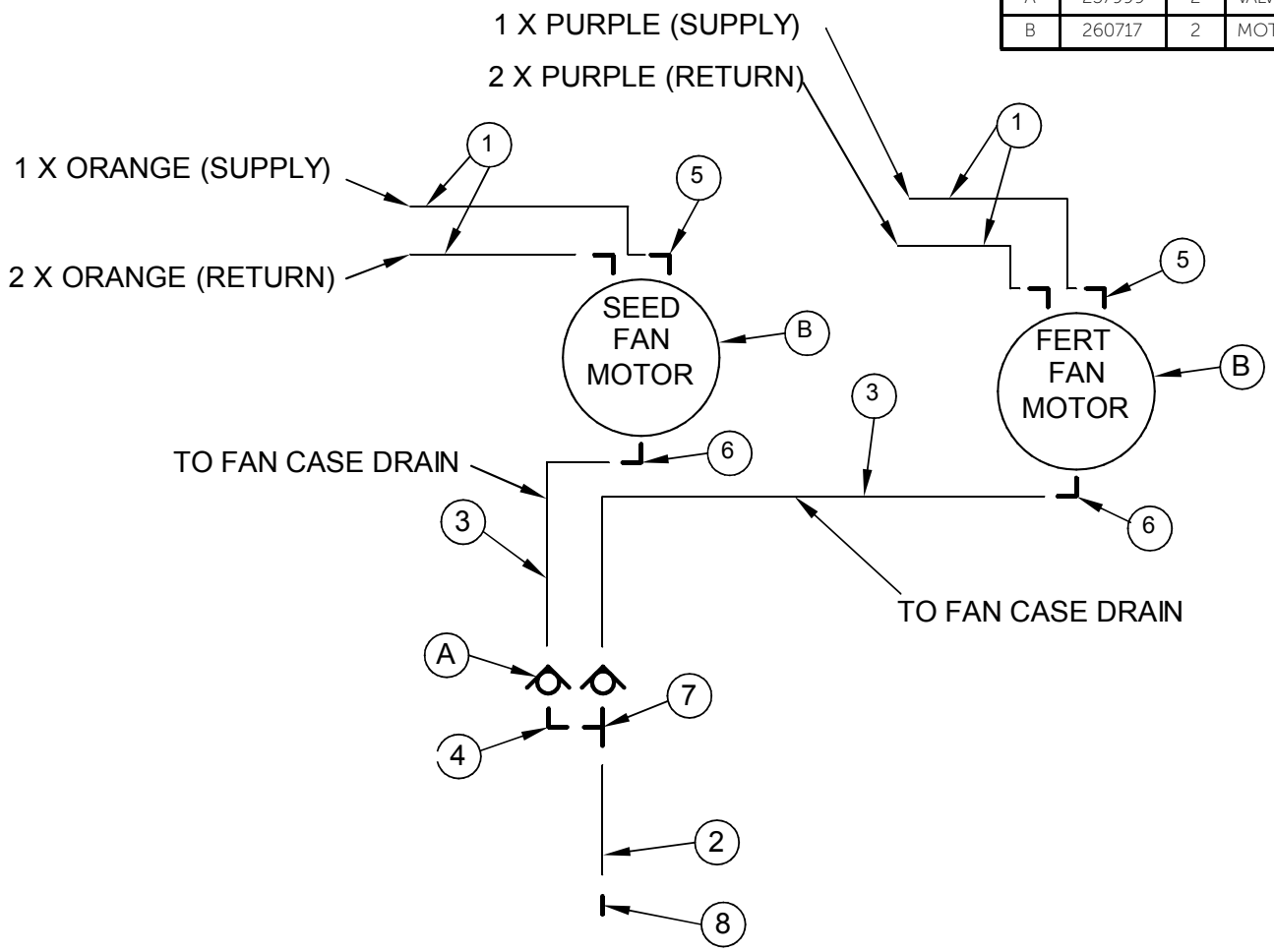

Parts Description:

Meter Drive and Fan Return Toolbar Kit

Part No. 401225-6

ITEM	QTY.	PART NO.	DESCRIPTION
1	3	258219	HOSE, 1/2-2WB X 210LOA - 08JIC F-SW X 08JIC F-SW
2	4	258020	TEE, 08 JIC F-SW X 08 JIC M X 08 JIC M - RUN
3	1	258000	EL, 90D - 08 JIC M X 08 JIC F-SW
4	3	257984	UNION, 08 JIC M X 08 JIC M
5	1	258385	CONNECTOR, 06 ORB M X 08 JIC M
6	1	258050	CONNECTOR, 08 ORB M X 08 JIC M

A	2	257999	VALVE, CHECK - INLINE - 08 JIC M X F - VONBERG - 1908MF-03

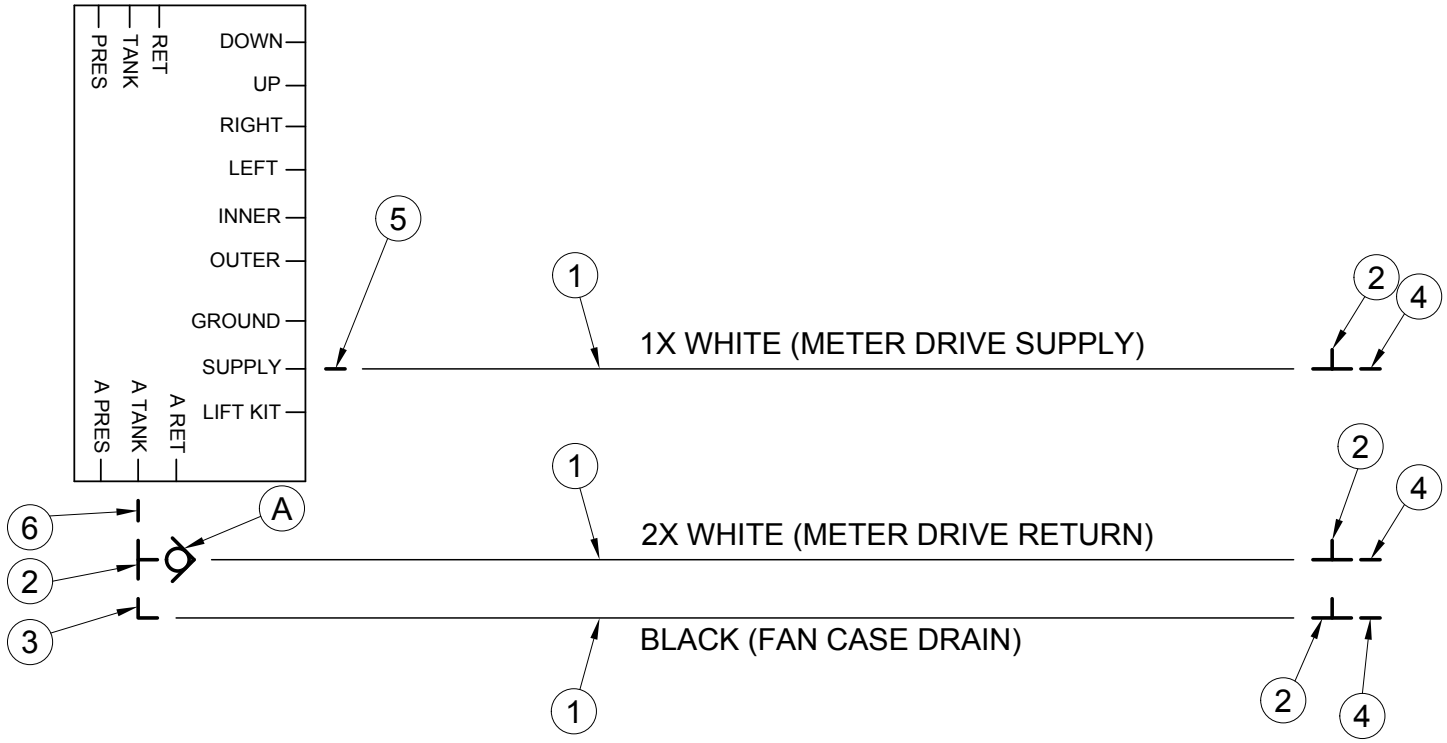

Parts Description:

Bag Lift
Hydraulic Schematic

Part No. 401067-5

ITEM	PART NO.	QTY.	DESCRIPTION
1	258058	1	CONNECTOR, 10 ORB M X 08 JIC M
2	258050	2	CONNECTOR, 08 ORB M X 08 JIC M
3	258000	4	EL, 90D - 08 JIC M X 08 JIC F-SW
4	258055	1	CONNECTOR, 08 ORB M X 08 JIC F-SW
5	258084	2	CONNECTOR - 12 JIC F-SW X 08 JIC M
6	258033	1	TEE, 12 JIC F-SW X 12 JIC M X 12 JIC M - RUN
8	258014	2	EL, 90D - 08 ORB M X 06 JIC M
9	258005	2	EL, 90D - 06 JIC M X 06 JIC F-SW
10	258051	2	CONNECTOR, 06 ORB M X 06 JIC M
11	258037	1	CONNECTOR, 06 JIC M X 06 JIC F - .078 ORIFICE
12	258195	2	HOSE, 3/8-2WB X 320 1/2LOA-06 JIC F-SW X 06 JIC F-SW
13	258295	2	HOSE, 1/2 2WB X 354LOA - 08 JIC F-SW X 08 JIC F-SW
14	257996	1	CONNECTOR, 12 ORBM X 12 JIC F-SW
15	258019	1	TEE, 12 JIC M X 12 JIC M X 12 JIC F-SW - BRANCH
16	258052	1	CONNECTOR, 12 ORBM X 12 JIC M
17	258086	1	VALVE, CHECK - 08 ORB F
18	258087	1	VALVE, CHECK - 12 ORB F
19	257978	1	CONNECTOR, 06 JIC M X 06 JIC F - .047 ORIFICE
20	257987	1	EL, 90D - 12 JIC M X 12 JIC F-SW
A	258304	1	VALVE,CONTROL-2 WAY-3 POS-CLOSED CENTER

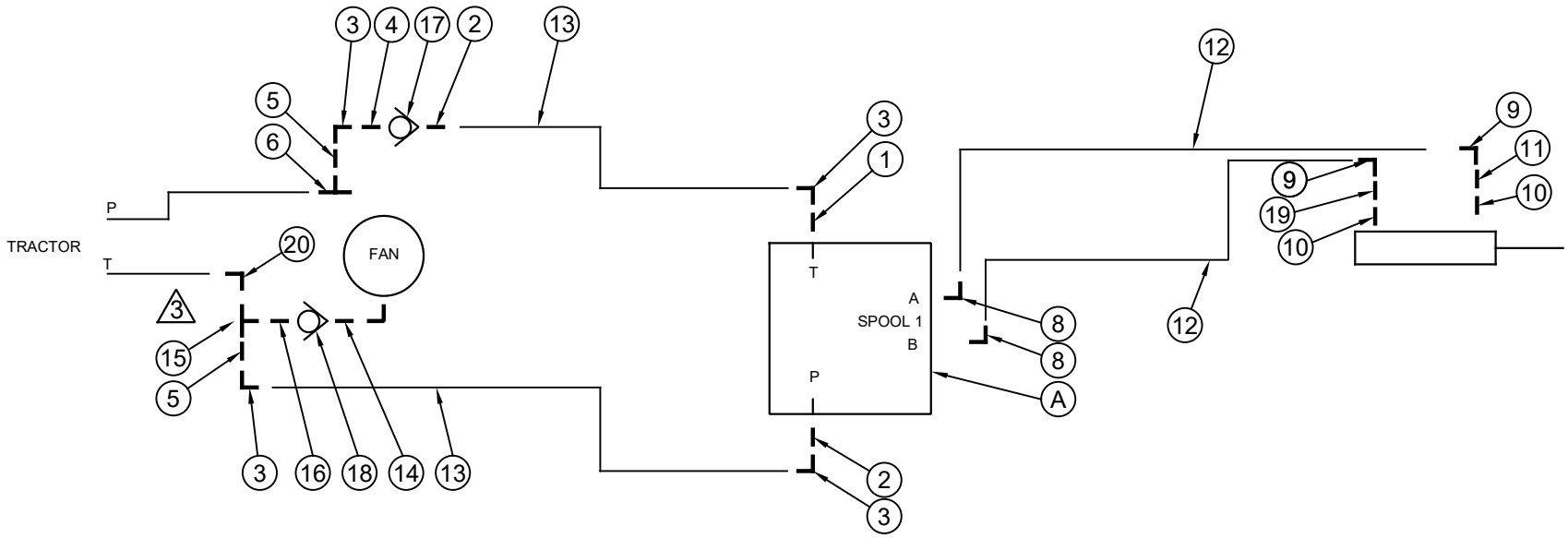

Parts Description:

Auto Zone Command
Air Hardware - UltraPro II

Part No. 408864-2 - 10 Zone - 2 Product
408867-2 - 08 Zone - 2 Product

BDL, ZONE COMMAND - AIR HARDWARE - 10 ZONE - 2 PRODUCT - 408864 - 2			
ITEM	QTY.	PART NO.	DESCRIPTION
1	15	260541	TUBE, AIR - 3/8 IN - BLACK
2	1	260538	ADAPTOR, BRASS - NIPPLE - HEX - 3/8 NPT
3	1	260520	CONNECTOR - 3/8 NPT M X 3/8 PUSH ON - AIR
4	2	260512	MANIFOLD, AIR - 5 STN - PARKER
5	10	260502	VALVE, AIR - 12 VDC - PARKER - ZONE COMMAND
6	76	260546	TUBE, AIR - 1/4 IN - RED
7	1	260522	ELBOW, 90D - 1/4 NPT M X 1/4IN PUSH ON - AIR-SWIVEL
8	1	260517	ADAPTOR, UNION TEE - 1/4 PUSH ON - AIR
9	2	260528	ADAPTOR, BRASS - PLUG - 3/8 NPT - M
10	76	260547	TUBE, AIR - 1/4 IN - YELLOW
11	76	260548	TUBE, AIR - 1/4 IN - GREEN
12	76	260549	TUBE, AIR - 1/4 IN - BLUE
13	120	260540	TUBE, AIR - 1/4 IN - BLACK
14	1	260514	ADAPTOR, UNION 3/8 PUSH ON
15	22	260521	ELBOW, 90D - 1/8 NPT M X 1/4IN PUSH ON - AIR - S.S.
16	18	260561	TEE, 1/8 NPT M X 1/4 PUSH ON - BRANCH - AIR - LEGRIS
17	1	260562	ADAPTOR, BRASS - BUSHING - 1/2 MPT X 1/4 FPT
18	1	260544	ADAPTOR, BRASS - BULKHEAD - 1/2 NPT
19	1	257109	FILTER, COMPRESSOR INTAKE - HOUSING W/FILTER
20	20	260506	CLEVIS, ROD - AIR CYLINDER - IGUS GERI-05
21	20	260507	CLEVIS PIN, AIR CYLINDER - IGUS GEFM-08
22	20	260508	CYL, AIR - 1 X 1 - PARKER - 1.06DPSRS X 1.00
23	10	260523	TEE, 1/4 NPT M X 1/4 PUSH ON X 1/4 PUSH ON - AIR
24	2	260558	BREATHER, 3/8NPT M - SINTERED BRONZE
25	1	260559	PLUG, COUNTERSUNK HEX - 3/8 MPT
BDL, ZONE COMMAND - AIR HARDWARE - 8 ZONE - 2 PRODUCT - 408867-2			
ITEM	QTY.	PART NO.	DESCRIPTION
5	8	260502	VALVE, AIR - 12 VDC - PARKER - ZONE COMMAND
20	16	260506	CLEVIS, ROD - AIR CYLINDER - IGUS GERI-05
21	16	260507	CLEVIS PIN, AIR CYLINDER - IGUS GEFM-08
22	16	260508	CYL, AIR - 1 X 1 - PARKER - 1.06DPSRS X 1.00
4	2	260511	MANIFOLD, AIR - 4 STN - PARKER
15	2	260521	ELBOW, 90D - 1/8 NPT M X 1/4IN PUSH ON - AIR - STAINLESS
16	14	260561	TEE, 1/8 NPT M X 1/4 PUSH ON - BRANCH - AIR - LEGRIS

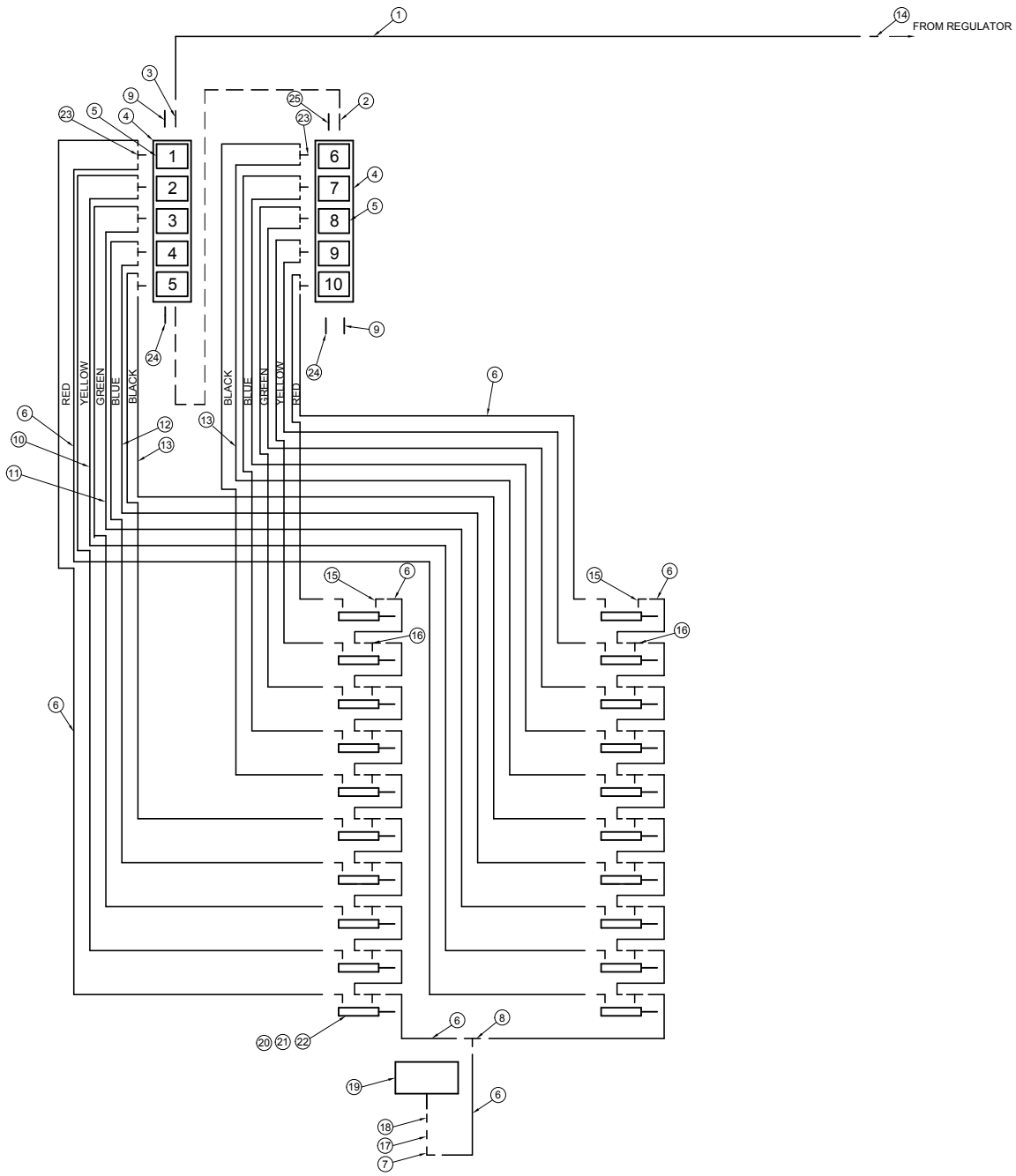
FROM REGULATOR
RED
YELLOW
GREEN
BLUE
BLACK
BLACK
BLUE
GREEN
YELLOW
RED
1
2
3
4
5
6
7
8
9
10

Parts Description:

Auto Zone Command
Air Hardware - UltraPro II

Part No. 408868-2 - 10 Zone - 1 Product

408869-2 - 08 Zone - 1 Product

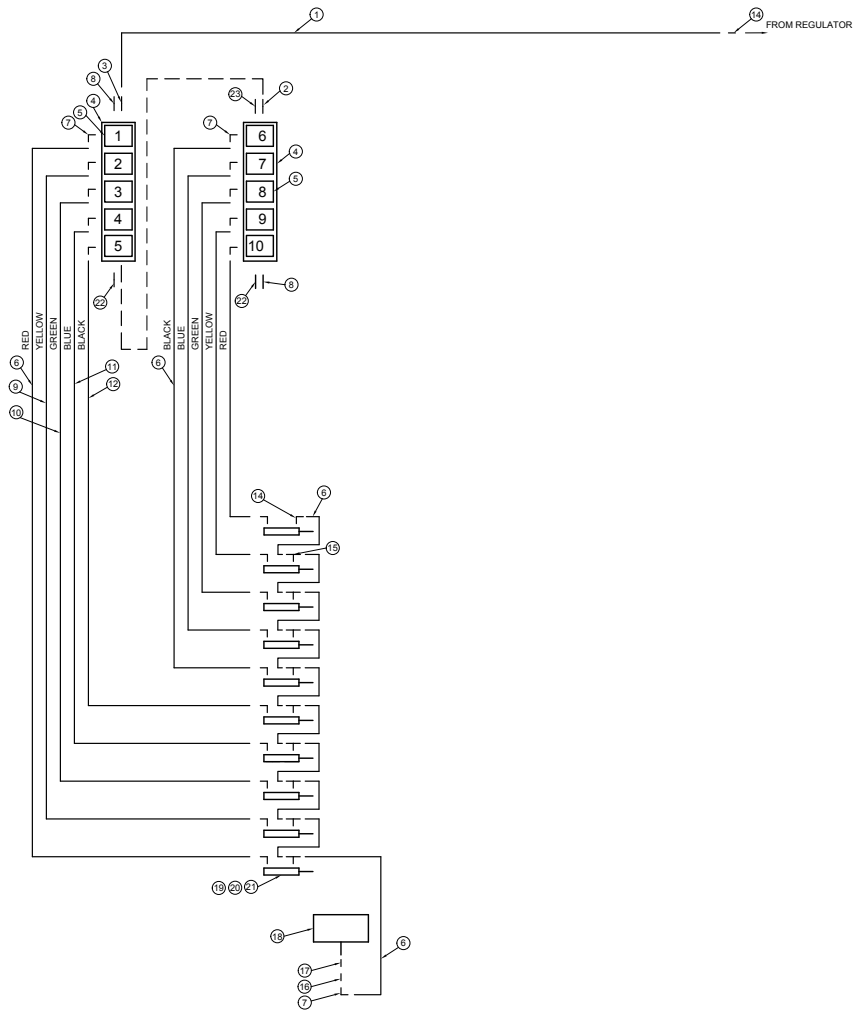

BDL, ZONE COMMAND - AIR HARDWARE - 10 ZONE - 1 PRODUCT - 408868-2			
ITEM	QTY.	PART NO.	DESCRIPTION
1	50	260541	TUBE, AIR - 3/8 IN - BLACK
2	1	260538	ADAPTOR, BRASS - NIPPLE - HEX - 3/8 NPT
3	1	260520	CONNECTOR - 3/8 NPT M X 3/8 PUSH ON - AIR
4	2	260512	MANIFOLD, AIR - 5 STN - PARKER
5	10	260502	VALVE, AIR - 12 VDC - PARKER - ZONE COMMAND
6	38	260546	TUBE, AIR - 1/4 IN - RED
7	11	260522	ELBOW, 90D - 1/4 NPT M X 1/4IN PUSH ON - AIR-SWIVEL
8	2	260528	ADAPTOR, BRASS - PLUG - 3/8 NPT - M
9	38	260547	TUBE, AIR - 1/4 IN - YELLOW
10	38	260548	TUBE, AIR - 1/4 IN - GREEN
11	38	260549	TUBE, AIR - 1/4 IN - BLUE
12	65	260540	TUBE, AIR - 1/4 IN - BLACK
13	1	260514	ADAPTOR, UNION 3/8 PUSH ON
14	11	260521	ELBOW, 90D - 1/8 NPT M X 1/4IN PUSH ON - AIR - STAINLESS
15	9	260561	TEE, 1/8 NPT M X 1/4 PUSH ON - BRANCH - AIR - LEGRIS
16	1	260562	ADAPTOR, BRASS - BUSHING - 1/2 MPT X 1/4 FPT
17	1	260544	ADAPTOR, BRASS - BULKHEAD - 1/2 NPT
18	1	257109	FILTER, COMPRESSOR INTAKE - HOUSING W/FILTER
19	10	260506	CLEVIS, ROD - AIR CYLINDER - IGUS GERI-05
20	10	260507	CLEVIS PIN, AIR CYLINDER - IGUS GEFM-08
21	10	260508	CYL, AIR - 1 X 1 - PARKER - 1.06DPSRS X 1.00
22	2	260558	BREATHER, 3/8NPT M - SINTERED BRONZE
23	1	260559	PLUG, COUNTERSUNK HEX - 3/8 MPT

BDL, ZONE COMMAND - AIR HARDWARE - 8 ZONE - 1 PRODUCT - 408869-2 - SUBSTITUTE ITEMS			
ITEM	QTY.	PART NO.	DESCRIPTION
5	8	260502	VALVE, AIR - 12 VDC - PARKER - ZONE COMMAND
19	8	260506	CLEVIS, ROD - AIR CYLINDER - IGUS GERI-05
20	8	260507	CLEVIS PIN, AIR CYLINDER - IGUS GEFM-08
21	8	260508	CYL, AIR - 1 X 1 - PARKER - 1.06DPSRS X 1.00
4	2	260511	MANIFOLD, AIR - 4 STN - PARKER
14	9	260521	ELBOW, 90D - 1/8 NPT M X 1/4IN PUSH ON - AIR - STAINLESS
7	9	260522	ELBOW, 90D - 1/4 NPT M X 1/4IN PUSH ON - AIR-SWIVEL

Parts Description:

Auto Zone Command Air Compressor/Tank

Part No. 408970

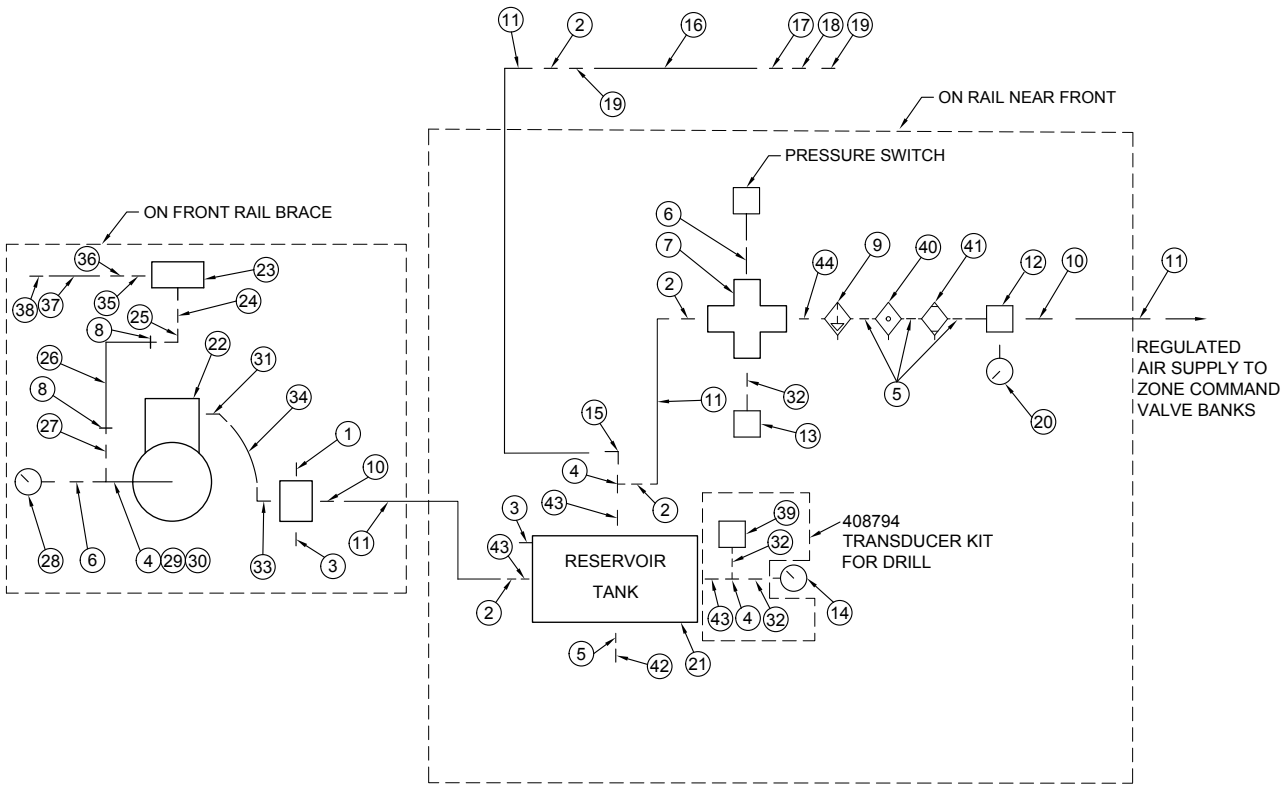

ITEM	QTY.	PART NO..	DESCRIPTION
1	1	258602	PLUG, 1/8 NPT M
2	4	260520	CONNECTOR, 3/8 NPT M X 3/8 PUSH ON - AIR
3	2	258601	PLUG, 1/4 NPT M
4	3	260534	ADAPTOR, BRASS - STREET TEE - 3/8 NPT
5	4	260576	ADAPTOR, BRASS - NIPPLE - 1/4 NPT
6	2	260542	ADAPTOR, BRASS - BUSHING - 3/8 MPT X 1/8 FPT
7	1	260535	ADAPTOR, BRASS - CROSS - 3/8 MPT - FEMALE
8	2	250837	CLAMP, HOSE - WHITE 3/4 IN - 7/8 IN - SHC-50
9	1	260574	FILTER, PARTICULATE - 14F15BB
10	2	260516	CONNECTOR - 1/4 NPT M X 3/8 PUSH ON - AIR
11	100 FT	260541	TUBE, AIR - 3/8 IN - BLACK
12	1	260503	REGULATOR/FILTER, AIR - PARKER - ZONE COMMAND
13	1	260504	VALVE, RELIEF - AIR - PARKER
14	1	260545	GAUGE, AIR - 1/4 NPT M - 0 - 150 PSI
15	1	260524	ELBOW, 90D - 3/8 NPT M X 3/8 IN PUSH ON - AIR
16	1	260543-1	HOSE ASSY, AIR - 3/8 IN X 72 IN - 3/8 NPT MXM
17	1	260532	VALVE, PLUG - 3/8 NPT M X F - BRASS
18	1	260527	COUPLER, QUICK - AIR - FEMALE BODY - 3/8 NPT F
19	1	260539	ADAPTOR, BRASS - COUPLER - 3/8 NPT
20	1	260551	GAUGE, AIR - 1/8 NPT M - 0 - 160 PSI
21	1	257108	TANK, AIR - 5 GAL
22	1	257112	COMPRESSOR, KIT - 12VDC - PACBRAKE #HP10626
23	1	257109	FILTER, COMPRESSOR INTAKE - HOUSING W/FILTER
24	1	260544	ADAPTOR, BRASS - BULKHEAD - 1/2 NPT
25	1	260556	ADAPTOR, BRASS - 90 MALE 1/2 NPT HOSE BARB
26	1.2 FT	256526	HOSE, RUBBER - 1/2IN - G221
27	1	260553	ADAPTOR, BRASS - MALE 3/8 NPT HOSE BARB 1/2 IN
28	1	258328	GAUGE, VACUUM - STEM MOUNT 1/8" NPT
29	1	260554	LOCKNUT, BRASS - 3/8 NPT
30	1	250648	O-RING, 2-113 - NITRILE 70 DUROMETER
31	1	260567	ADAPTOR, BRASS - 45D 3/8 MPT X 3/8 AIR BRAKE
32	1	260536	ADAPTOR, BRASS - BUSHING - 3/8 MPT X 1/4 FPT
33	1	260566	ADAPTOR, BRASS - 90D 3/8 MPT X 3/8 AIR BRAKE
34	1	260569	TUBE, AIR - 3/8 IN - 7 1/4 IN L - TEFLON PTFE
35	1	260570	ADAPTOR, BRASS - REDUCER - 3/8 MPT X 1/2 FPT
36	1	260571	ADAPTOR, BRASS - 1/2 MPT X 3/4 HB
37	1	256527	HOSE, RUBBER 3/4 IN (200 PSI)
38	1	260490	SCREEN, PRE-FILTER, COMPRESSOR INTAKE
39	1	260807	TRANSDUCER, PRESSURE - AIR - RAVEN - 250PSI
40	1	260575	FILTER, COALESCING - 10F15ED
41	1	260573	DRYER, AIR - DESICCANT - WILKERSON - X06-02-000
42	1	260513	AUTOMATIC DRIP LEG DRAIN - 1/4 IN - 06D1NA
43	3	260565	ADAPTOR, BRASS - REDUCER - 1/4 MPT X 3/8 FPT
44	1	260526	ADAPTOR, BRASS - HEX NIPPLE - 3/8 MPT x 1/4 MPT

Parts Description:

ISO Seed Only Toolbar with On-Frame 360 BU Tank

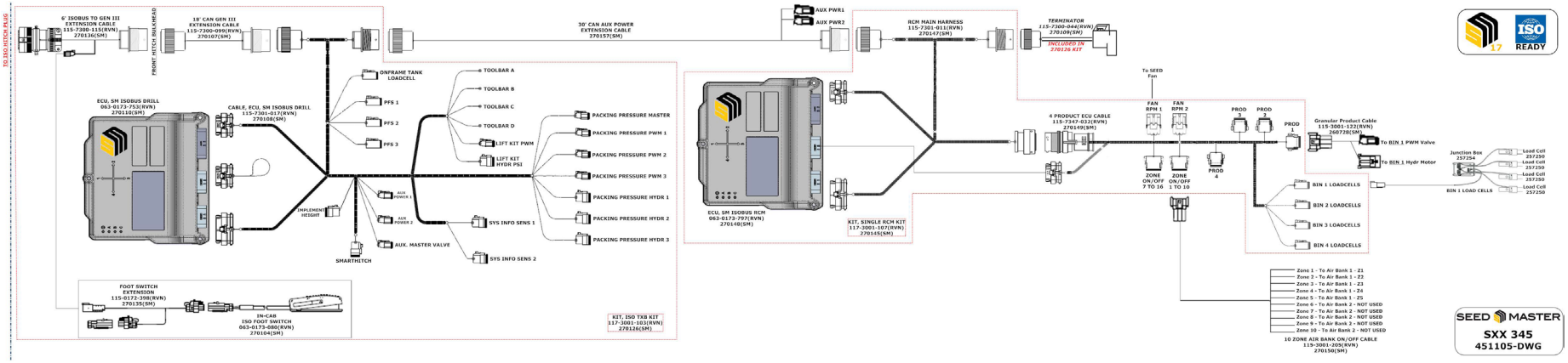

Parts Description:

ISO Seed with Granular Fert Toolbar with On-Frame Tank

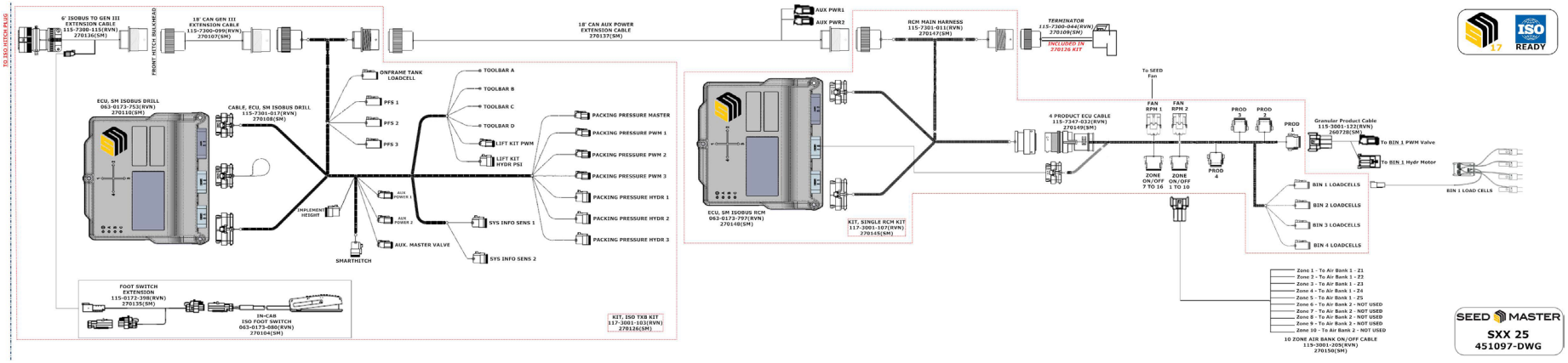

Parts Description:

ISO Seed with Granular Fert Toolbar with On-Frame Tank and Tow Behind Liquid Tank

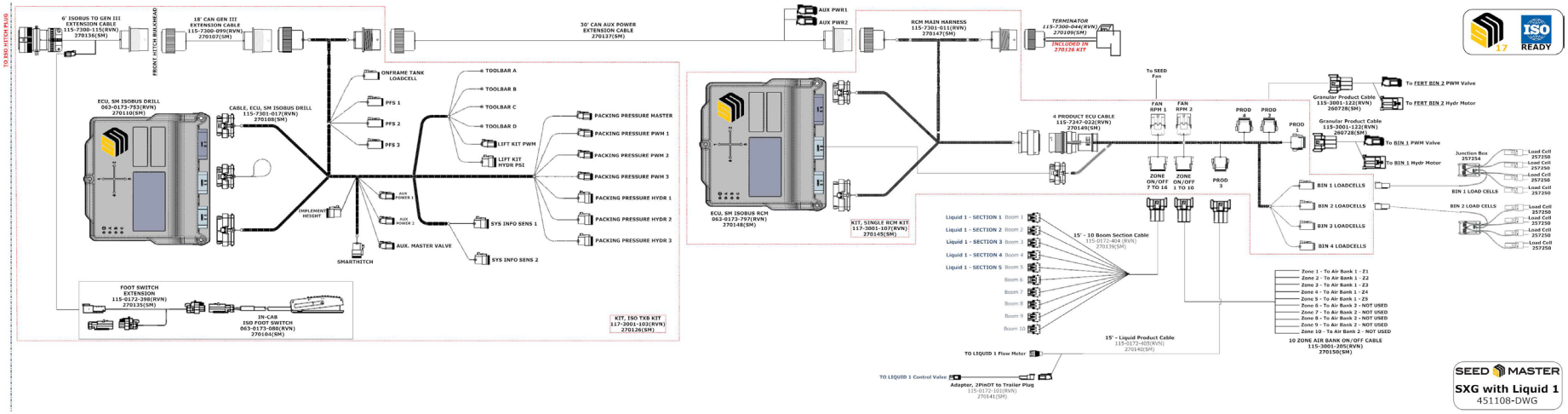

Parts Description:

Existing VT - ISO Nova Cart Ready

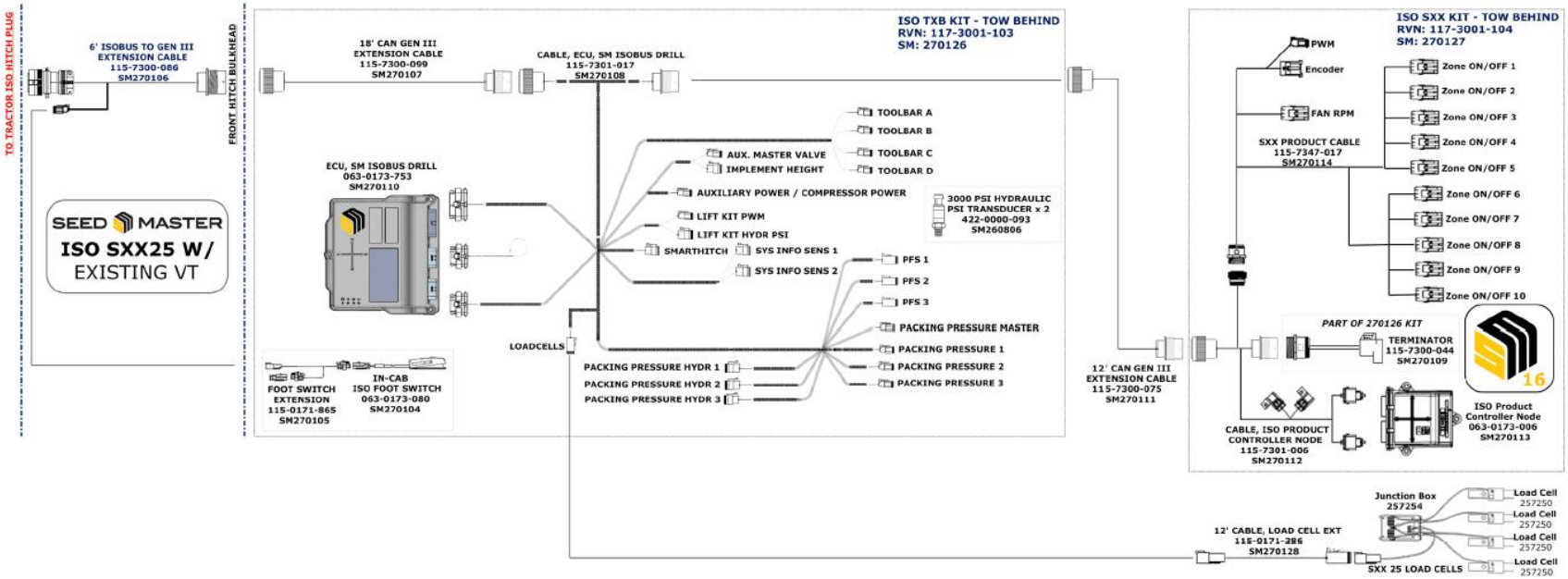

Parts Description:
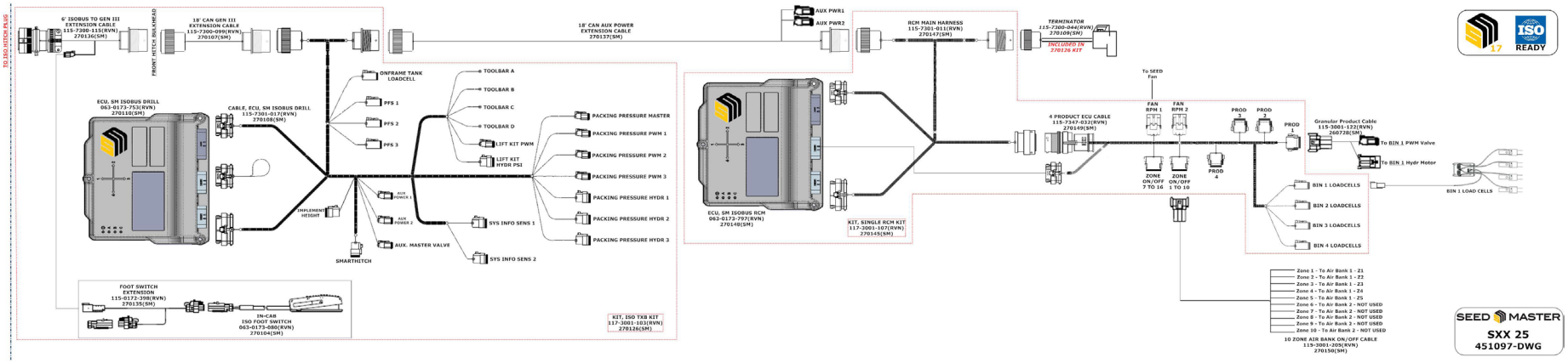
ISO Seed Only Toolbar with 20 BU On-Frame Tank