SEED MASTER™

2017 NOVA FLEX PARTS MANUAL

Replacement Cost: $29.95 CAD

WE'RE FARMERS, TOO.

Phone: 306.721.3001 | **Toll Free:** 1.888.721.3001
Fax: 306.721.3002 | www.seedmaster.ca

Table of Contents

FRAME

2 Flex Assembly - Trailing
3 Flex Assembly - Leading
4 Frame Connections
5 Fifth Fold Hinge Assembly.
6 Outer Fold Hinge Assembly
7 Main frame
8 Clearance Lights
9 Wing Latch
10 Hitch - Trailing
11 Hitch - Leading
12 Distribution Transition - Trailing
13 Distribution Transition - Leading
14 Rear Axle - Trailing
15 Rear Axle - Leading
16 Support frame - Leading
17 Compressed Air System Mount - Leading
18 Hose Holder - Trailing

HYDRAULIC SCHEMATICS

29 Hydraulic Schematic Wing
20 Hydraulic Kit - Extension - Flex - Trailing
21 Hydraulic Schematic Extensions - Flex - Leading
22 Hydraulic Kit - Dual Fan - Flex - Leading
23 Hydraulic Kit - Single Fan - Flex - Leading

ELECTRICAL SCHEMATICS

24 Control Box Wire Harness
25 Valve wiring
26 Nova Extension - Trailing
27 Clearance Lights Main Harness - Trailing
28 Clearance Light Main Harness - Leading

Parts Description:

Flex Assembly

Part No. 505000 - Trailing - 70 FT
505010 - Leading - 70 FT

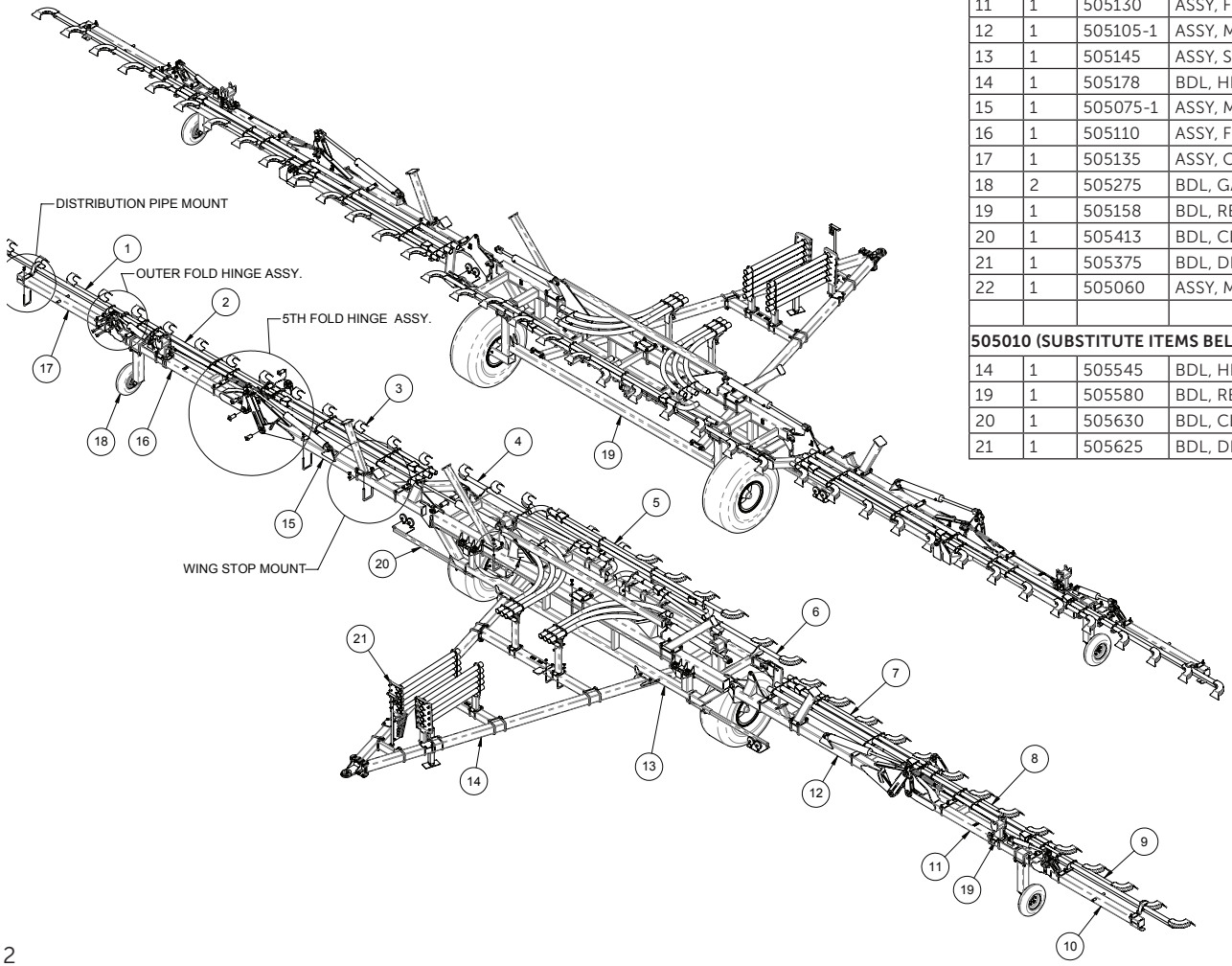

505000			
ITEM	QTY.	PART NO.	DESCRIPTION
1	1	505335	ASSY, OUTER DISTRIBUTION - R.H. - FLEX - YEL
2	1	505320	ASSY, FIFTH FOLD DISTRIBUTION - R.H. - FLEX - YEL
3	1	505305	ASSY, WING DISTRIBUTION - R.H. - FLEX - YEL
4	1	505295	ASSY, MAIN DISTRIBUTION - R.H. - FLEX - YEL
5	1	505280	ASSY, MAIN DISTRIBUTION - FLEX - YEL
6	1	505345	ASSY, MAIN DISTRIBUTION - L.H. - FLEX - YEL
7	1	505350	ASSY, WING DISTRIBUTION - L.H. - FLEX - YEL
8	1	505355	ASSY, FIFTH FOLD DISTRIBUTION - L.H. - FLEX - YEL
9	1	505360	ASSY, OUTER DISTRIBUTION - L.H. - FLEX - YEL
10	1	505140	ASSY, OUTER WING - L.H. - FLEX - BLK
11	1	505130	ASSY, FIFTH FOLD WING - L.H. - FLEX - BLK
12	1	505105-1	ASSY, MAIN WING - L.H. - FLEX - BLK
13	1	505145	ASSY, SUPPORT FRAME - FLEX - 70 FT - BLK
14	1	505178	BDL, HITCH - FLEX - TRAILING - 70 FT
15	1	505075-1	ASSY, MAIN WING - R.H. - FLEX - BLK
16	1	505110	ASSY, FIFTH FOLD WING - R.H. - FLEX - BLK
17	1	505135	ASSY, OUTER WING - R.H. - FLEX - BLK
18	2	505275	BDL, GAUGE WHEEL - FLEX - 70 FT
19	1	505158	BDL, REAR AXLE - FLEX - TRAILING - 70 FT
20	1	505413	BDL, CLEARANCE LIGHTS - FLEX - TRAILING - 70 FT
21	1	505375	BDL, DISTRIBUTION TRANSITION - FLEX - TRAILING - 70 FT - 10 ZONE
22	1	505060	ASSY, MAIN FRAME - FLEX - 70 FT - BLK
505010 (SUBSTITUTE ITEMS BELOW)			
14	1	505545	BDL, HITCH - FLEX - LEADING - 70 FT
19	1	505580	BDL, REAR AXLE - FLEX - LEADING - 750 AXLE - 70 FT
20	1	505630	BDL, CLEARANCE LIGHTS - FLEX - LEADING - 70 FT
21	1	505625	BDL, DISTRIBUTION TRANSITION - FLEX - LEADING - 70 FT - 10 ZONE

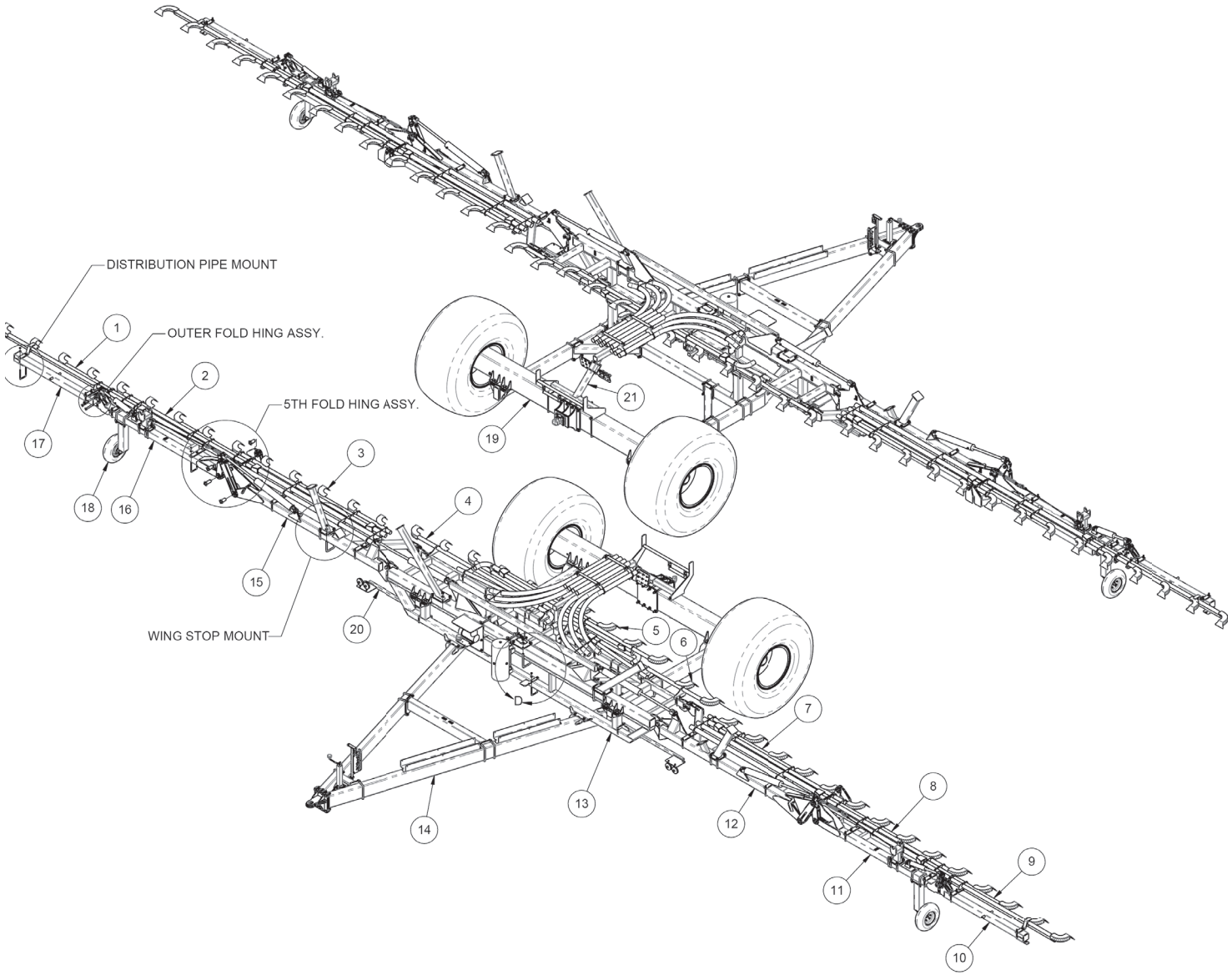
DISTRIBUTION PIPE MOUNT
OUTER FOLD HING ASSY.
5TH FOLD HING ASSY.
WING STOP MOUNT
1
2
3
4
5
6
7
8
9
10
11
12
13
14
15
16
17
18
19
20
21
D

Parts Description:
Frame Connections

ITEM	QTY.	PART NO.	DESCRIPTION
1	6	505228	ASSY, LINK PIN - 1 1/2 X 3 1/16 - PLATING
2	2	505226	ASSY, LINK PIN - 1 1/2 X 3 5/8 - PLATING
3	8	250223	BOLT, U-SQ - 1/2 UNC X 4ID X 6 IN - 2 IN THD - GR5 PL
4	46	250450	NUT, HEX - 1/2 UNC GR5 PL
5	46	250555	WASHER, FLAT - 1/2 IN SAE PL
6	4	250239	BOLT, U-SQ - 3/4 UNC X 5ID X 6 3/4 IN - 1 5/8 IN THD - GR5
7	29	250451	NUT, HEX - 3/4 UNC GR5 PL
8	30	250552	WASHER, FLAT - 3/4 IN GR8 PL
9	5	250208	BOLT, U-SQ - 1/2 UNC X 4ID X 5 IN - 2 IN THD - GR8 PL
10	1	402135-1	PLATE, MOUNT 1/4 IN - REDUCING/RELIEVING BLOCK
11	16	250036	BOLT, HEX - 3/8 X 1 UNC GR5 PL
12	2	505263	ASSY, LINK PIN - 3/4 X 4 5/16 -PLATING
13	4	505260	ASSY, LINK PIN - 3/4 X 5 7/16 - PLATING
14	1	505200	ASSY, MAIN WING STOP - R.H. - FLEX - BLK
15	6	250238	BOLT, U-SQ - 3/4 UNC X 5ID X 9 IN - 2IN THD - GR5 JS500
16	1	505210	ASSY, WING STOP - R.H. - FIFTH FOLD - FLEX - BLK
17	1	505210	ASSY, WING STOP - R.H. - FIFTH FOLD - FLEX - BLK
18	2	505255	ASSY, LINK PIN - 3/4 X 2 7/16 - PLATING
19	4	250240	BOLT, U-SQ - 1/2 UNC X 5ID X 6 1/2 IN - 1 1/2 IN THD - GR5 JS500
20	1	505305	ASSY, WING DISTRIBUTION - R.H. - FLEX - YEL
21	1	505216	ASSY, HINGE PIN - 3 1/4 IN - FIFTH FOLD - FLEX - PLATE
22	6	250050	BOLT, HEX - 1/2 X 3 1/2 UNC GR5 PL
23	6	250504	NUT, LOCK - 1/2 UNC - STOVER - PL
24	1	505225	ASSY, HINGE LINK - MAIN - RH - FLEX - BLK
25	1	505265	ASSY, HINGE LINK - LIFT - RH - FIFTH FOLD WING - FLEX - BLK
26	4	258510	CYL, HYD 3 X 24 IN - WING LIFT
27	1	505250	ASSY, HINGE LINK - R.H. - OUTER WING - FLEX - BLK
28	2	505245	ASSY, HINGE LINK - LIFT - OUTER WING FLEX - BLK

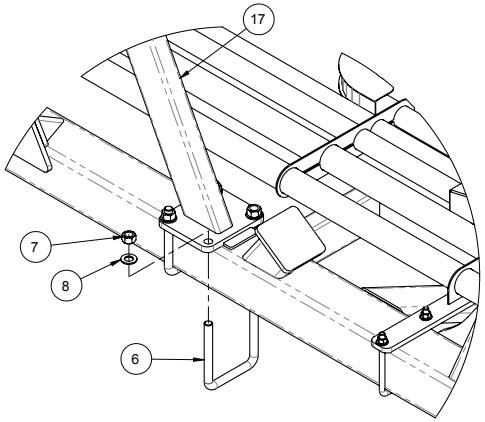

WING STOP MOUNTS FOR MAIN WING

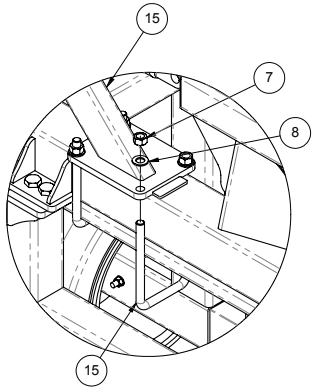

WING STOP MOUNT FOR MAIN FRAME

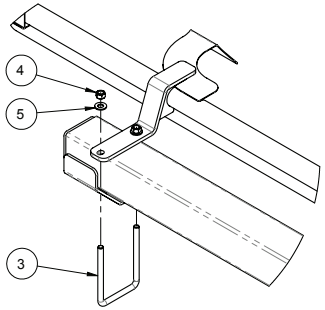

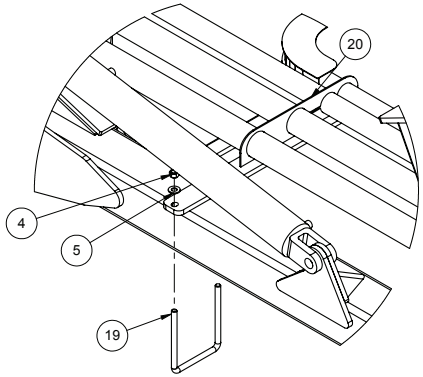

DISTRIBUTION PIPE MOUNTS

Parts Description:
Fifth Fold Hinge Assembly

ITEM	QTY.	PART NO.	DESCRIPTION
1	6	505228	ASSY, LINK PIN - 1 1/2 X 3 1/16 - PLATING
2	2	505226	ASSY, LINK PIN - 1 1/2 X 3 5/8 - PLATING
3	8	250609	PIN, COILED SPRING - 3/8 X 3 IN - PL
4	6	250050	BOLT, HEX - 1/2 X 3 1/2 UNC GR5 PL
5	1	505216	ASSY, HINGE PIN - 3 1/4 IN - FIFTH FOLD - FLEX - PLATE
6	6	250504	NUT, LOCK - 1/2 UNC - STOVER - PL
7	1	505225	ASSY, HINGE LINK - MAIN - RH - FLEX - BLK
8	1	505265	ASSY, HINGE LINK - LIFT - RH - FIFTH FOLD WING - FLEX - BLK
9	4	258510	CYL, HYD 3 X 24 IN - WING LIFT
9	5	250208	BOLT, U-SQ - 1/2 UNC X 4ID X 5 IN - 2 IN THD - GR8 PL

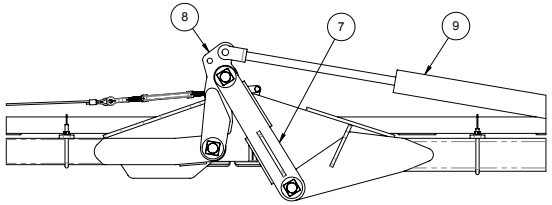

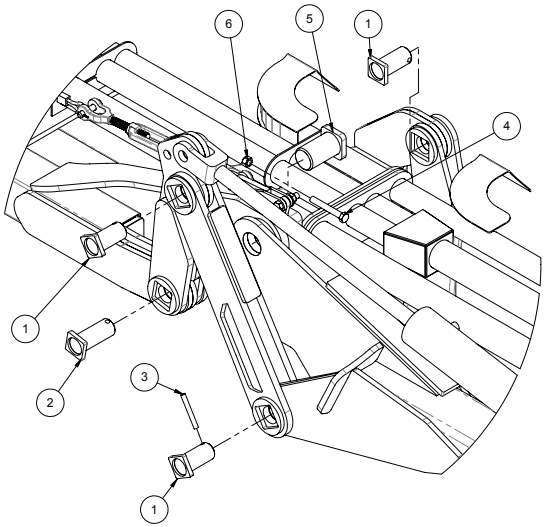

Parts Description:
Outer Fold Hinge Assembly

ITEM	QTY.	PART NO.	DESCRIPTION
1	8	250607	PIN, SPRING - 3/16 X 1 1/4 IN - PL
2	4	505260	ASSY, LINK PIN - 3/4 X 5 7/16 - PLATING
3	2	505263	ASSY, LINK PIN - 3/4 X 4 5/16 -PLATING
4	2	505255	ASSY, LINK PIN - 3/4 X 2 7/16 - PLATING
5	1	505250	ASSY, HINGE LINK - R.H. - OUTER WING - FLEX - BLK
6	2	505245	ASSY, HINGE LINK - LIFT - OUTER WING FLEX - BLK

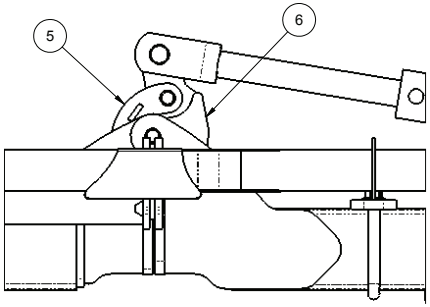

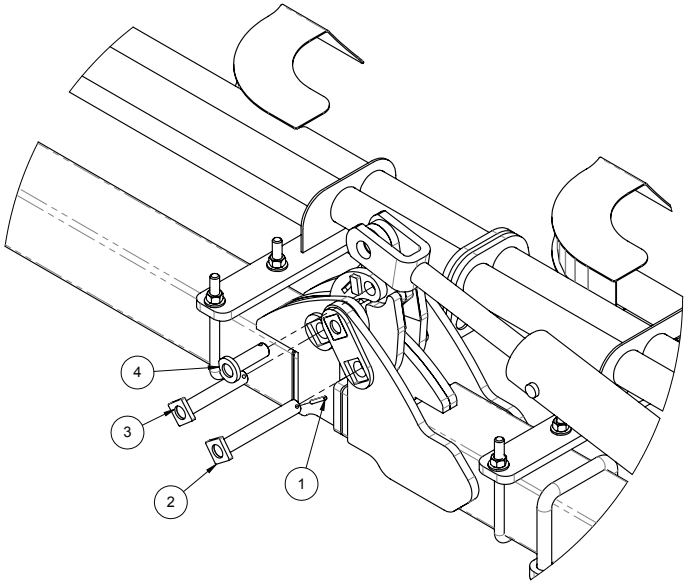

Parts Description:
Main Frame
Part No. 505058

ITEM	QTY.	PART NO.	DESCRIPTION
1	1	505060	ASSY, MAIN FRAME - FLEX - BLK
2	1	505145	ASSY, SUPPORT FRAME - FLEX - BLK
3	8	250006	BOLT, HEX 7/8 X 2 1/4 UNC GR5 PL
4	8	250553	WASHER, FLAT 7/8IN GR8 PL
5	8	250452	NUT, HEX - 7/8 UNC PL

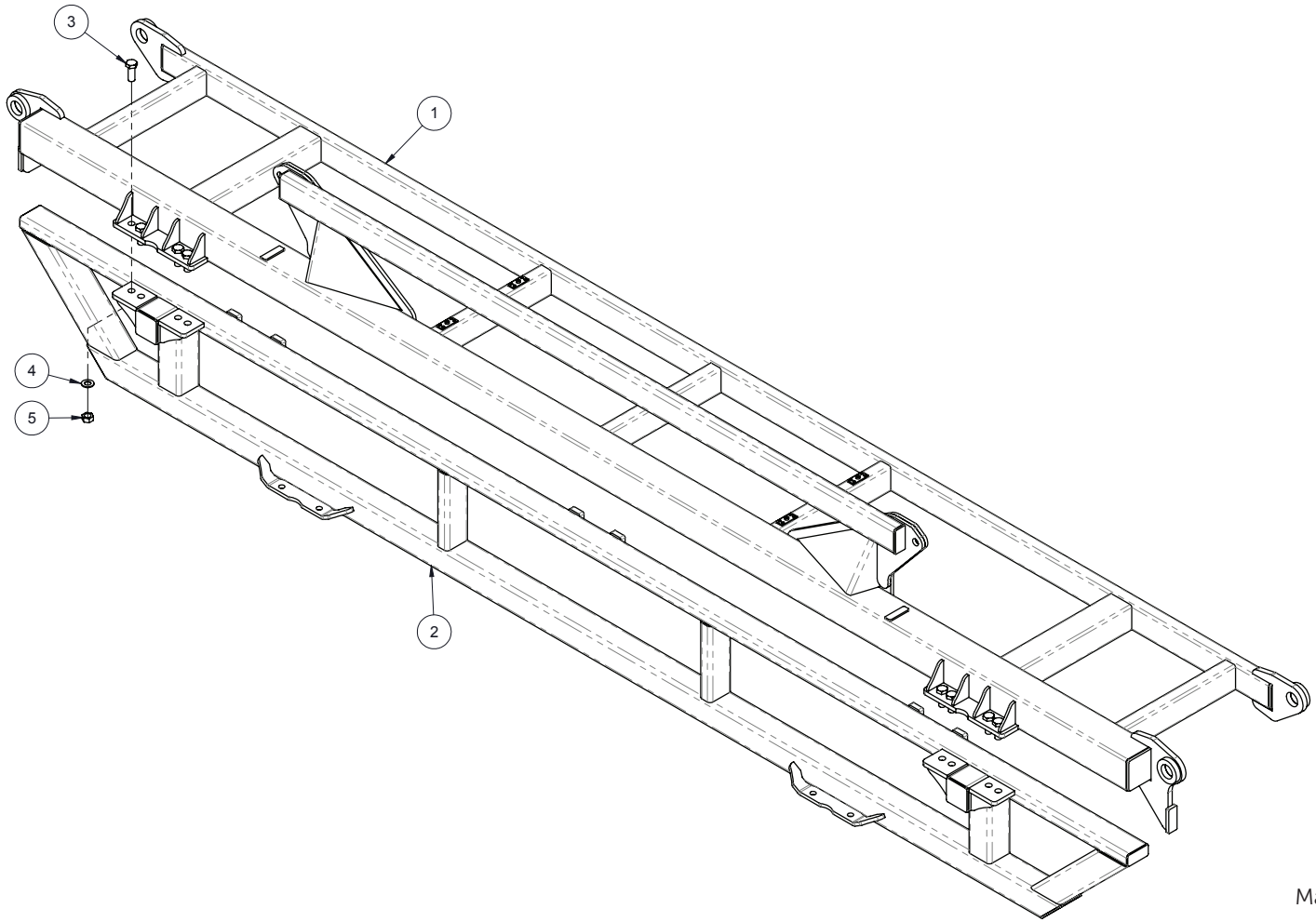

Parts Description:
Clearance Light
Part No. 505413

ITEM	QTY.	PART NO.	DESCRIPTION
1	1	505415	ASSY, CLEARANCE LIGHT MOUNT - FLEX - BLK
2	1	400115	ASSY, CLEARANCE LIGHT ADJUSTABLE ARM
3	1	257000 257001	LAMP-CLEARANCE - DUAL FACE - YELLOW - 4 IN LAMP - CLEARANCE - SINGLE FACE - RED - 4 IN
4	1	250208	BOLT, U-SQ - 1/2 UNC X 4 ID X 5 IN - 2 IN THD - GR8 PL
5	2	250450	NUT, HEX 1/2 UNC GR5 PL
6	2	250555	WASHER, FLAT - 1/2 IN - GR8 - PL
7	2	250013	BOLT, HEX 1/2 X 1 1/4 IN GR5 PL

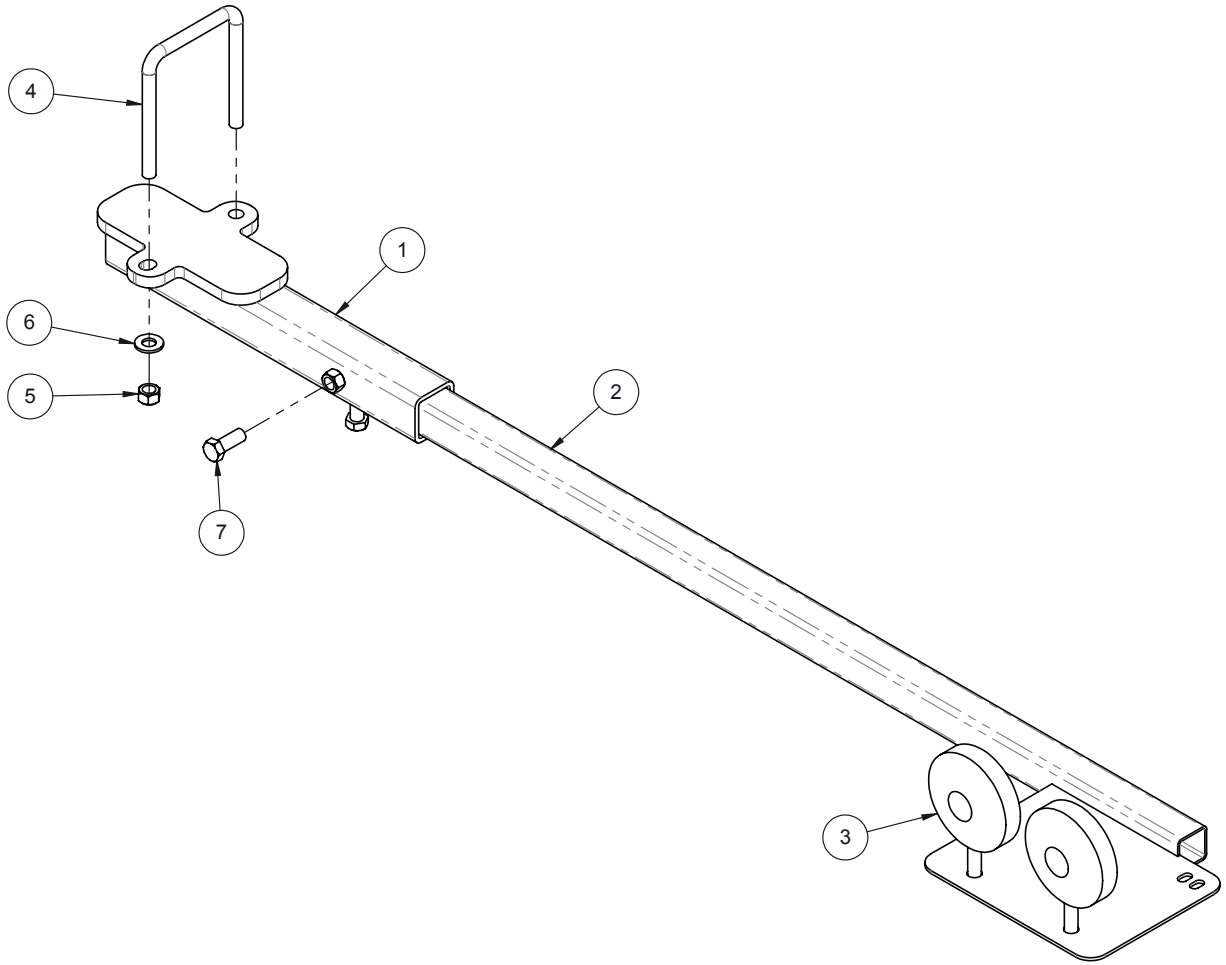

Parts Description:

Wing Latch

Part No. 505240

ITEM	QTY.	PART NO.	DESCRIPTION
1	1	505230	ASSY, LATCH - MAIN - R.H. - OUTER WING - FLEX - BLK
2	1	505235	ASSY, HOOK - LATCH - OUTER WING - FLEX - BLK
3	1	250684	SPRING, DIE - LIGHT DUTY - 1 1/2 OD X 3/4 ID X 3 IN - GREEN
4	1	250601	BUSH, 1 1/2OD X 1 1/4ID X 7/8 IN - CONNEX
5	5	250552	WASHER, FLAT 3/4IN GR8 PL
6	2	250201	BOLT, U-SQ - 3/4 UNC X 4 ID X 6 IN - 2 IN THD - GR5 PL
7	5	250451	NUT, HEX 3/4 UNC GR5 PL
8	1	250004	BOLT, HEX 3/4 X 2 3/4 UNC GR5 PL
9	1	250012	BOLT, HEX 1/2 X 5 IN GR5 PL
10	5	250504	NUT, LOCK - 1/2 UNC - STOVER - PL
11	2	250556	WASHER, FLAT - 1/2 IN - PL
12	6	250555	WASHER, FLAT - 1/2 IN - GR8 - PL
13	4	250048	BOLT, HEX 1/2 X 2 IN GR5 PL
14	2	250450	NUT, HEX 1/2 UNC GR5 PL
15	1	400223	BUSH, PIVOT SPACER 1 1/4OD X .77ID X 1 IN
16	1	505241	PLATE, 1/4 IN - WASHER - LATCH - FLEX - BLK
17	4	505242	PLATE, 1/4 IN - CONNECTOR - WING LATCH - FLEX - BLK
18	1	505269	CABLE, 1/4 IN X 56 IN EFF - WING LATCH - FLEX
19	1	505258	ASSY, ADJUSTABLE LUG - FLEX - PLATING

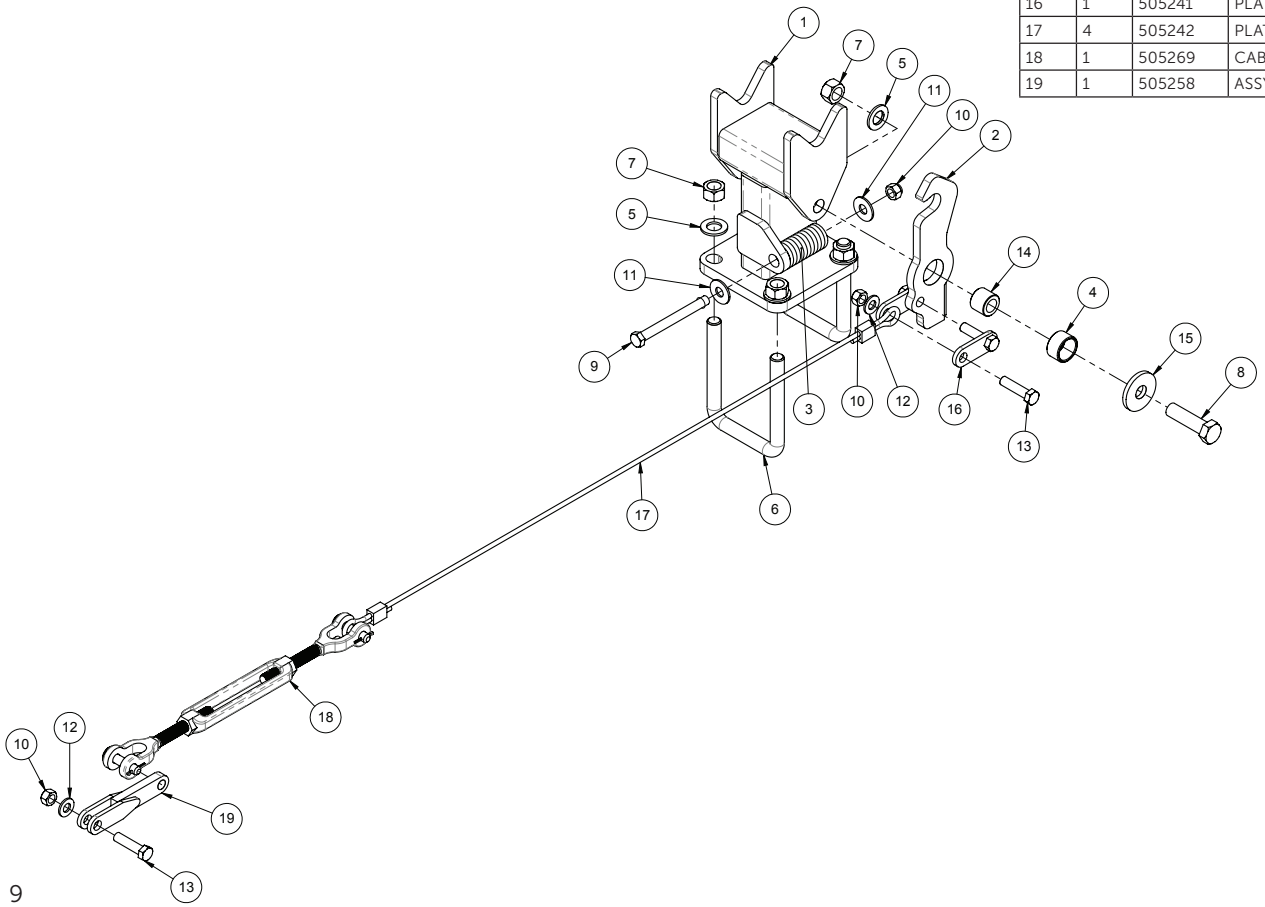

Parts Description:

Hitch - Trailing - 70 FT

Part No. 505178

ITEM	QTY.	PART NO.	DESCRIPTION
1	1	505175	ASSY, FRT HITCH - L.H. - FLEX- BLK
2	1	505190	ASSY, CLEVIS - FRT HITCH - FLEX - BLK
3	1	505185	ASSY, CROSS BRACE - FRT - FRT HITCH - FLEX - BLK
4	1	505183	ASSY, CROSS BRACE - MID - FRT HITCH - FLEX - BLK
5	1	505180	ASSY, CROSS BRACE - BACK - FRT HITCH - FLEX - BLK
6	1	505170	ASSY, FRT HITCH - R.H. - FLEX - BLK
7	6	250553	WASHER, FLAT 7/8IN GR8 PL
8	8	250452	NUT, HEX - 7/8 UNC PL
9	16	250014	BOLT, HEX 3/4 X 2 UNC GR5 PL
10	36	250552	WASHER, FLAT 3/4IN GR8 PL
11	36	250451	NUT, HEX 3/4 UNC GR5 PL
12	8	250044	BOLT, HEX 7/8 X 3 IN UNC GR5 PL
13	10	250201	BOLT, U-SQ - 3/4 UNC X 4 ID X 6 IN - 2 IN THD - GR5 PL
14	2	250208	BOLT, U-SQ - 1/2 UNC X 4 ID X 5 IN - 2 IN THD - GR8 PL
15	4	250555	WASHER, FLAT - 1/2 IN - GR8 - PL
16	4	250450	NUT, HEX 1/2 UNC GR5 PL
17	1	404300	ADJUSTABLE JACK PLATE
18	1	254503	HITCH JACK - 5000 LB - SIDE WIND - W/OUTER BUSHING

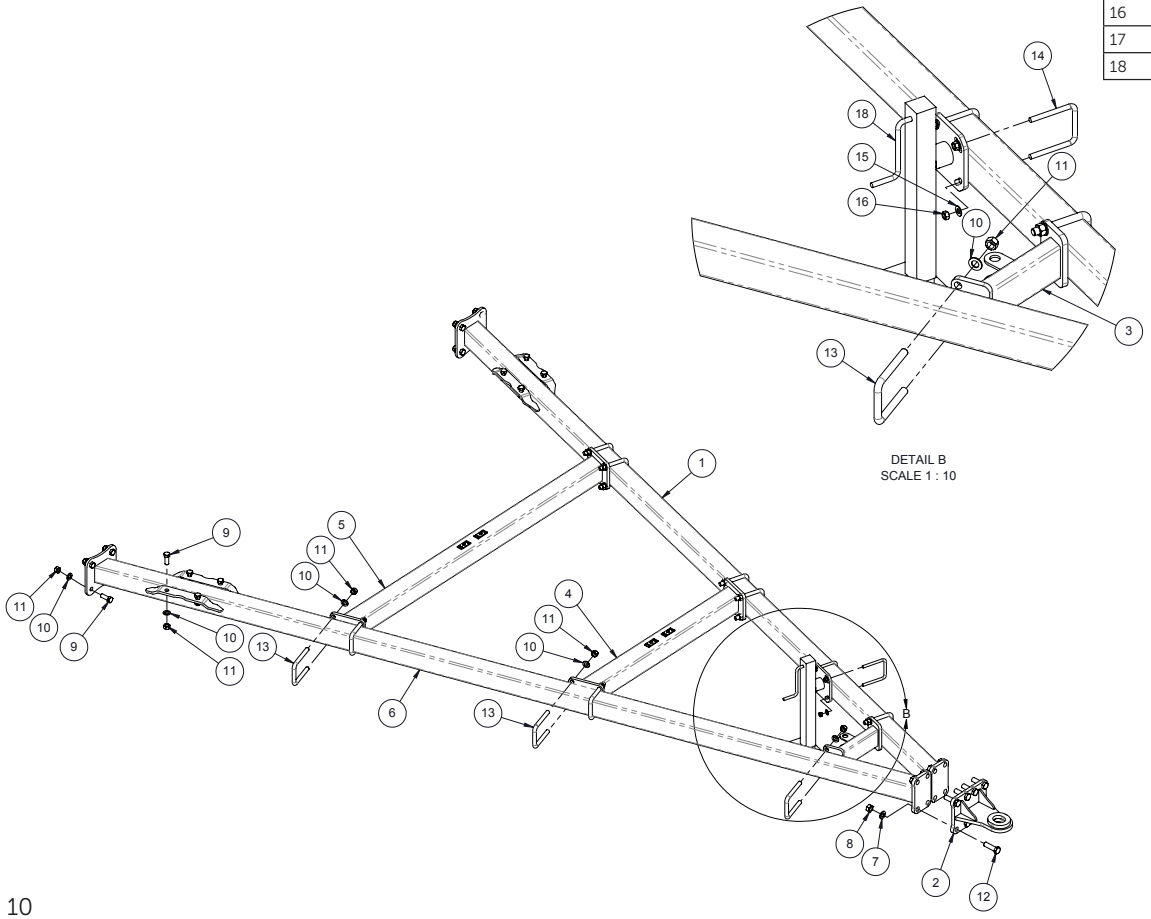

Parts Description:

Hitch - Leading - 70 FT

Part No. 505545

ITEM	QTY.	PART NO.	DESCRIPTION
1	1	505550	ASSY, MAIN BEAM - FRT HITCH - R.H. - FLEX - LEADING - BLK
2	1	505560	ASSY, MAIN BEAM - FRT HITCH - L.H. - FLEX - LEADING - BLK
3	1	505565	ASSY, CLEVIS - FRT HITCH - FLEX - LEADING - BLK
4	8	250044	BOLT, HEX 7/8 X 3 IN UNC GR5 PL
5	8	250553	WASHER, FLAT 7/8IN GR8 PL
6	8	250452	NUT, HEX - 7/8 UNC PL
7	8	250209	BOLT, U-SQ - 3/4 UNC X 8 ID X 6 IN - 2 IN THD - GR8 PL
8	4	250551	WASHER, FLAT 3/4 IN PL
9	24	250451	NUT, HEX 3/4 UNC GR5 PL
10	20	250552	WASHER, FLAT 3/4IN GR8 PL
11	8	250014	BOLT, HEX 3/4 X 2 UNC GR5 PL
12	1	505575	ASSY, CROSS BRACE - FRT - FRT HITCH - FLEX - LEADING - BLK
13	1	505635	ASSY, BUSHING PLATE - ADJUSTABLE JACK - FLEX - LEADING - BLK
14	1	505570	ASSY, CROSS BRACE - FRT HITCH - FLEX - LEADING - BLK
15	1	254503	HITCH JACK - 5000 LB - SIDE WIND - W/OUTER BUSHING

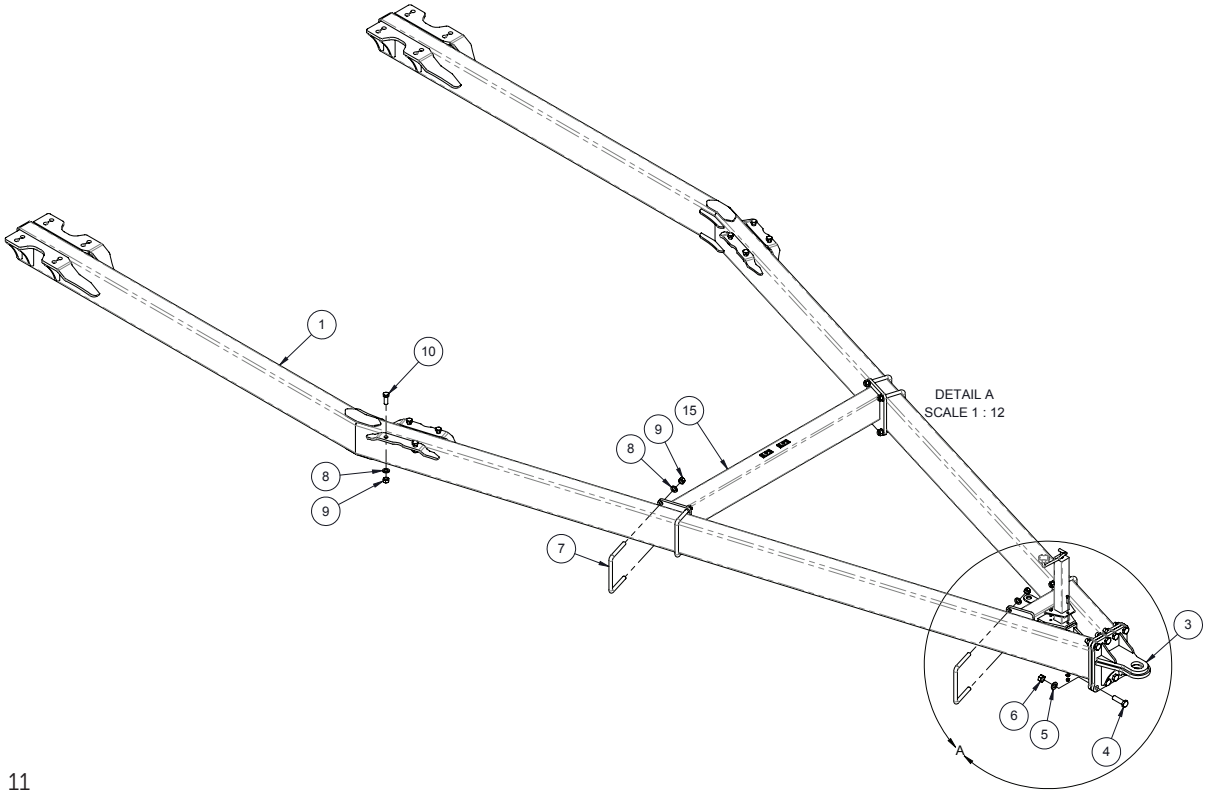

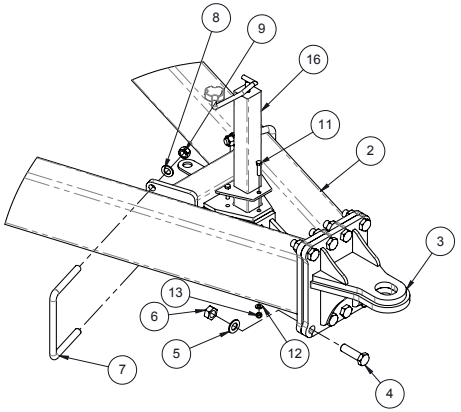

Parts Description:
Distribution Transition - Trailing
Part No. 505375

ITEM	QTY.	PART NO.	DESCRIPTION
1	1	505385	ASSY, DELIVERY PIPE HOLDER - FLEX - BLK
2	1	505390	ASSY, DELIVERY PIPE HOLDER - R.H. - FLEX - BLK
3	10	505393	TUBE, ERW - 2 1/2 OD X 16 GA X 40" - STR - BLK
4	10	250019	BOLT, HEX 3/8 X 1 1/4 IN GR5 PL
5	10	250466	NUT, JAM - 3/8 UNC
6	10	250557	WASHER, FLAT - 3/8 IN GR8 PL
7	10	250453	NUT, HEX - 3/8 UNC PL
8	8	250208	BOLT, U-SQ - 1/2 UNC X 4 ID X 5 IN - 2 IN THD - GR8 PL
9	16	250450	NUT, HEX 1/2 UNC GR5 PL
10	16	250555	WASHER, FLAT - 1/2 IN - GR8 - PL
11	1	505395	ASSY, DELIVERY PIPE HOLDER - L.H. - FLEX - BLK
12	8	250036	BOLT, HEX - 3/8 X 1 UNC GR5 PL
13	8	250453	NUT, HEX - 3/8 UNC GR5 PL
14	8	250557	WASHER, FLAT - 3/8 IN GR8 PL
15	2	505404	PLATE, FRMD 1/4 IN - GUIDE - DISTRIBUTION PIPE - FLEX - BLK
16	10	250450	NUT, HEX - 1/2 UNC GR5 PL
17	10	250555	WASHER, FLAT - 1/2 IN SAE PL
18	1	402135-1	PLATE, MOUNT 1/4 IN - REDUCING / RELIEVING BLOCK
19	5	250208	BOLT, U-SQ - 1/2 UNC X 4ID X 5 IN - 2 IN THD - GR8 PL
20	2	505400	ASSY, DISTRIBUTION PIPE HOLDER - FLEX - BLK

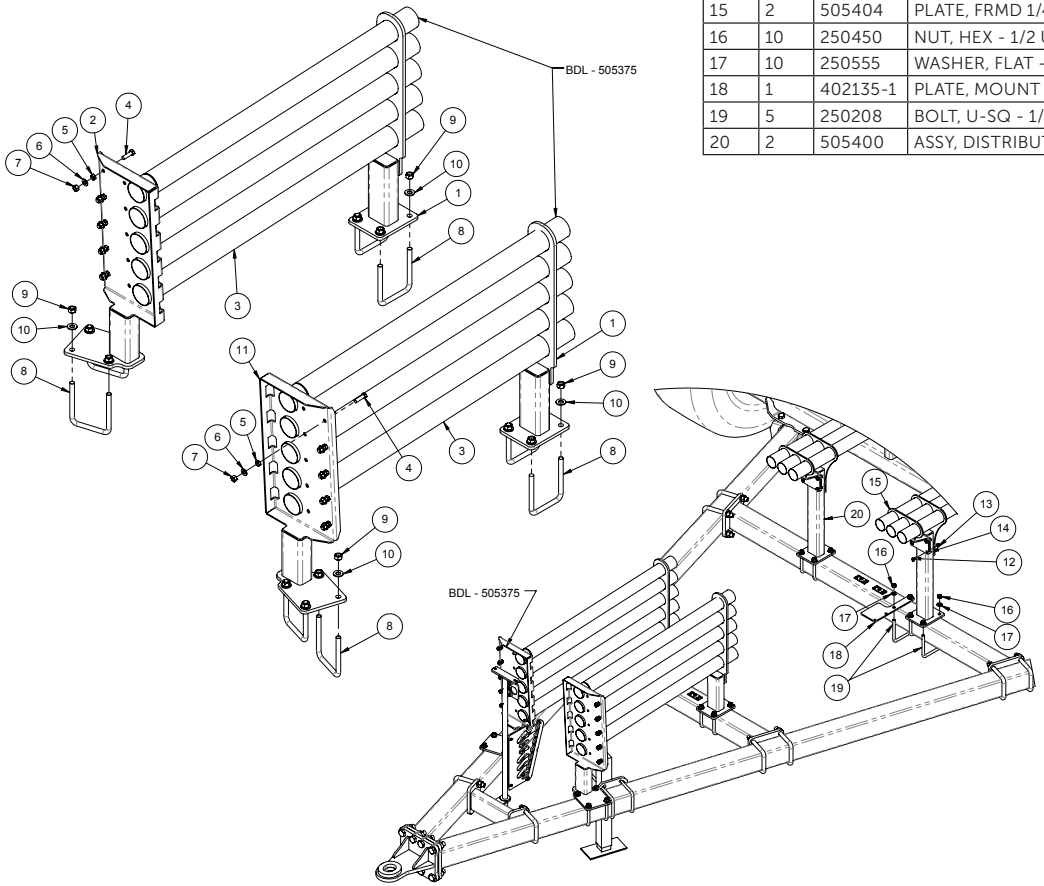

Parts Description:
Distribution Transition - Leading
Part No. 505625

408500-3			
ITEM	QTY.	PART NO.	DESCRIPTION
1	1	505595-1	ASSY, HOSE HOLDER - REAR - FLEX - LEADING - BLK
2	1	505600	ASSY, QUICK COUPLING - REAR - FLEX - LEADING
3	1	510281	ASSY, DISTRIBUTION PIPES HITCH GUIDE HANGER - NOVA
4	4	505393	TUBE, ERW - 2 1/2 OD X 16 GA X 40.0000 - STR - BLK
5	1	505573	PLATE, 1/4 IN - HOLDER - R.H. - DISTRIBUTION - FLEX - LEADING -
6	2	505563	TUBE, ERW - FRMD - 2 1/2 OD X 16 GA70.0000 - PUR
7	2	505562	TUBE, 2 1/2OD X 16GA X 65.0000
8	2	505561	TUBE, 2 1/2OD X 16GA X 60.0000
9	1	505577	PLATE, 1/4 IN - HOLDER - L.H. - DISTRIBUTION - FLEX - LEADING - BLK
10	8	250557	WASHER, FLAT - 3/8 IN GR8 PL
11	8	250453	NUT, HEX - 3/8 UNC PL
12	4	250211	BOLT, U-SQ - 3/8 UNC X 4 ID X 3 IN - 2 IN THD - GR5 PL
13	2	250229	BOLT, U-SQ - 1/2 UNC X 4ID X 4 IN - 2 IN THD - GR5 PL
14	2	250205	BOLT, U-SQ - 1/2 UNC X 3ID X 4 IN - 1 1/2 IN THD - GR8 PL
15	16	250555	WASHER, FLAT - 1/2 IN - GR8 - PL
16	16	250450	NUT, HEX 1/2 UNC GR5 PL
17	2	250233	BOLT, U-SQ - 1/2 UNC X 12 ID X 8 IN - 2 IN THD - GR5 PL
18	4	250105	BOLT, CARRIAGE - 1/2 X 1 1/4IN UNC GR5 PL
19	4	250101	BOLT, CARRIAGE - 3/8 X 1 1/4 IN UNC GR5 PL
20	4	250400	NUT, FLANGE - 3/8 UNC PL
21	1	505658	ASSY, HOSE HOLDER SUPPORT - REAR - FLEX - LEADING - BLK
22	2	505656	PLATE, GUIDE 1/4 IN - DISTRIBUTION - FLEX - LEADING

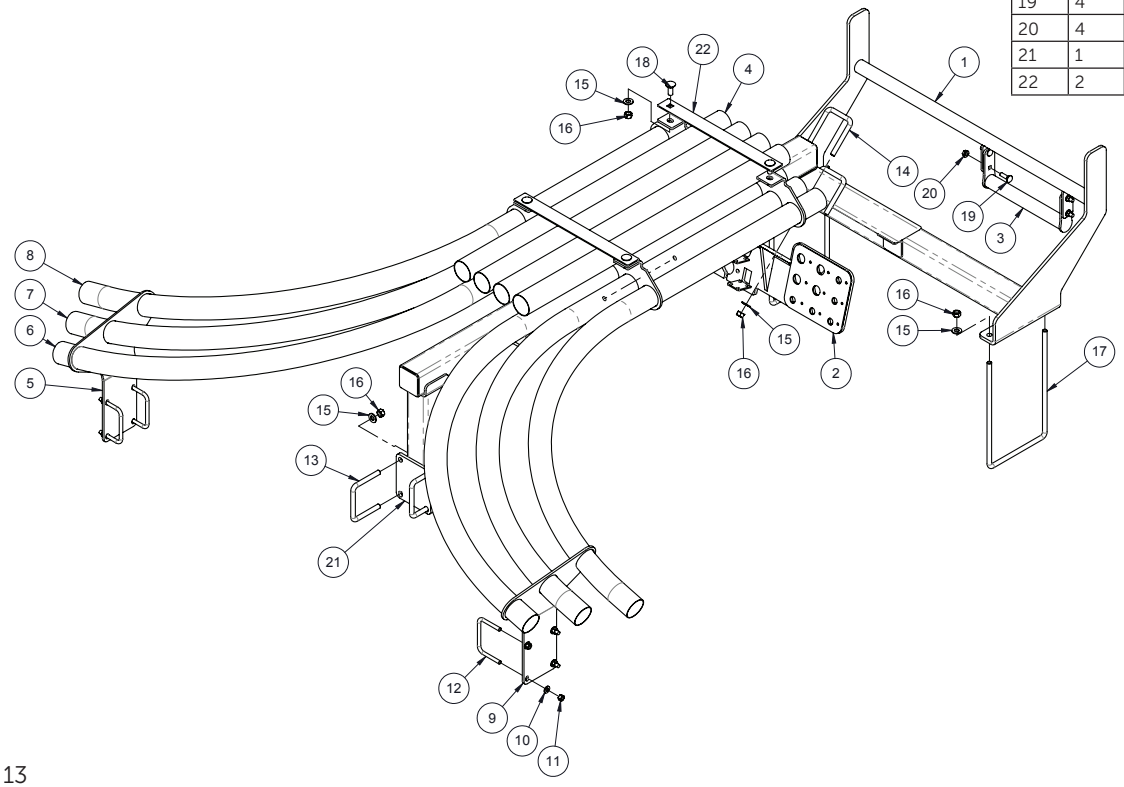

Parts Description:

Rear Axle - Trailing

Part No. 505158

ITEM	QTY.	PART NO.	DESCRIPTION
1	1	505160	ASSY, REAR HITCH - FLEX - BLK
2	2	255040	ASSY, TIRE - MAIN FRAME - 16.5L-16.1SL SOFTTRAC II
3	2	252001	ASSY, HUB/SPINDLE - H811 -2 1/8 IN STRAIGHT SPINDLE
4	4	250228	BOLT, U-SQ - 1/2 UNC X 2ID X 6 IN - 2 IN THD - GR5 PL
5	8	250555	WASHER, FLAT - 1/2 IN - GR8 - PL
6	8	250450	NUT, HEX 1/2 UNC GR5 PL
7	2	250201	BOLT, U-SQ - 3/4 UNC X 4 ID X 6 IN - 2 IN THD - GR5 PL
8	4	250552	WASHER, FLAT 3/4IN GR8 PL
9	4	250451	NUT, HEX 3/4 UNC GR5 PL
10	2	250011	BOLT, HEX 1/2 X 6 IN GR5 PL
11	2	250401	NUT, FLANGE - 1/2 UNC PL
12	16	253010	BOLT, WHEEL - HA614 HUB - WB17

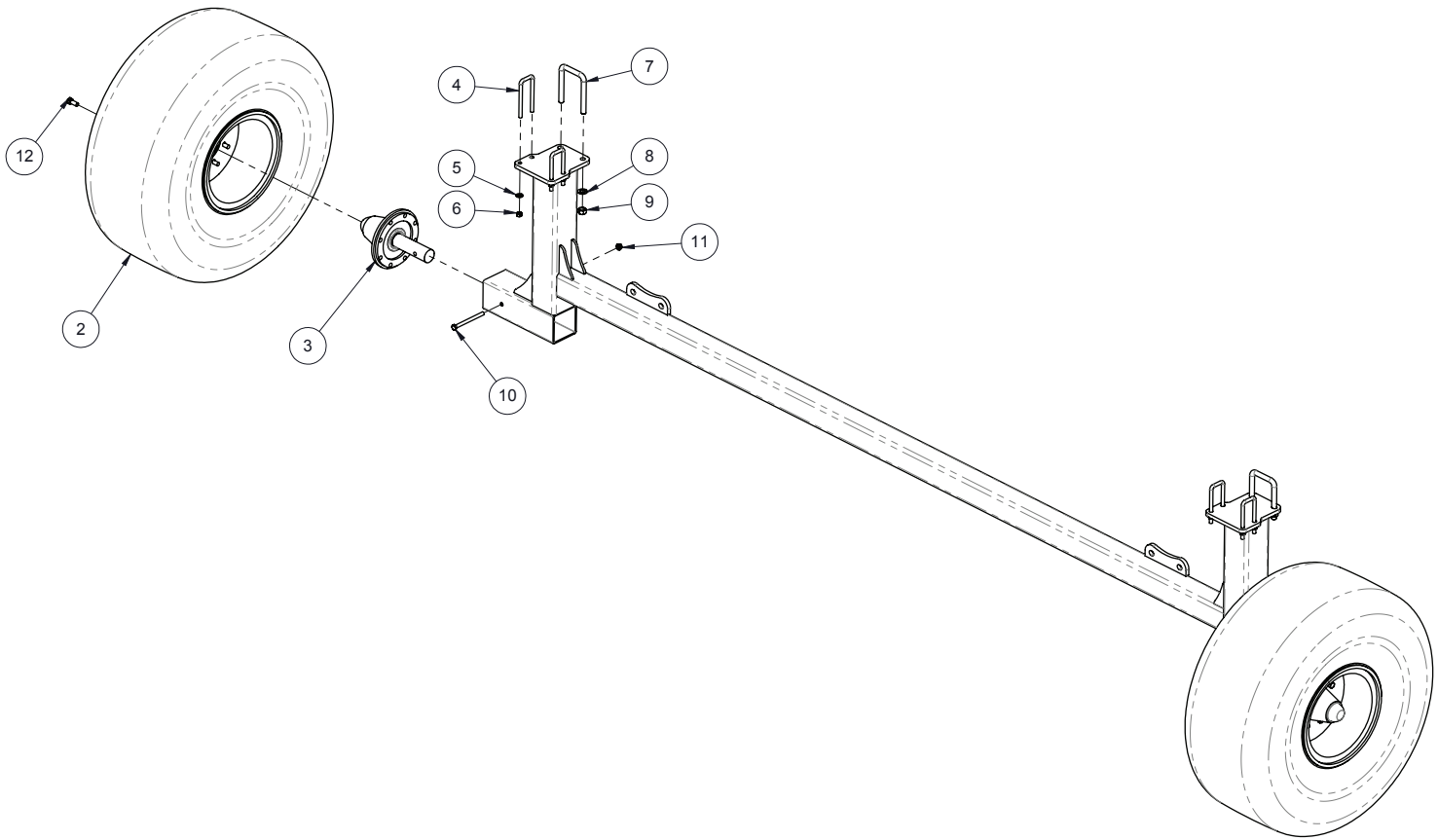

Parts Description:

Rear Axle - Leading

Part No. 505580

ITEM	QTY.	PART NO.	DESCRIPTION
1	2	252003	ASSY, HUB/SPINDLE W/NUTS - H1010 - 3 1/2IN STRAIGHT SPINDLE
2	2	255078	ASSY, TIRE - 750/65R26 - RADIAL - 158A8 - 10 BOLT RIM
3	1	505585	ASSY, REAR AXLE - FLEX - LEADING - 750 AXLE - BLK
4	1	250451	NUT, HEX 3/4 UNC GR5 PL
5	1	250054	BOLT, HEX - 3/4 X 9 1/2 UNC GR5 PL
6	1	250552	WASHER, FLAT 3/4IN GR8 PL
7	8	250553	WASHER, FLAT 7/8IN GR8 PL
8	8	250452	NUT, HEX - 7/8 UNC PL
9	8	250006	BOLT, HEX 7/8 X 2 1/4 UNC GR5 PL

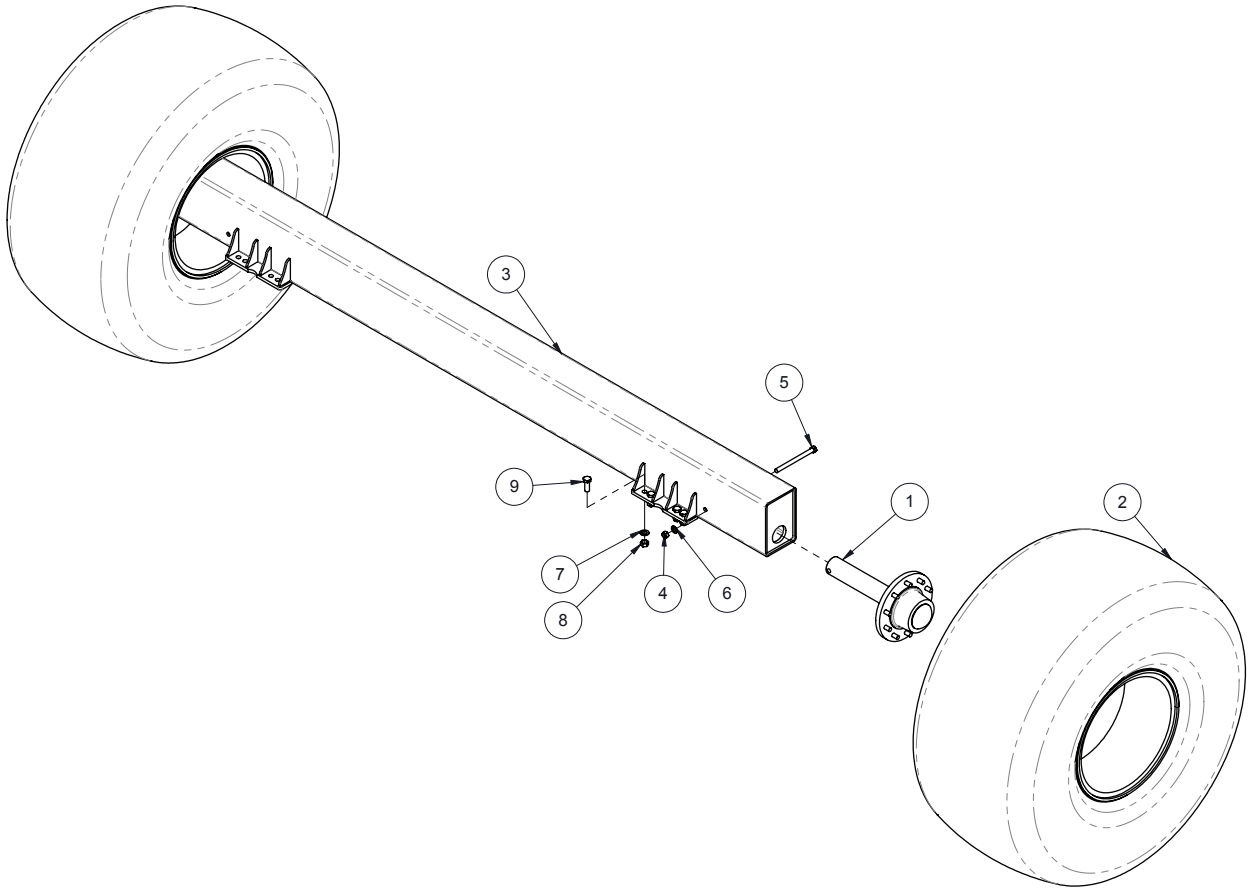

Parts Description:

Support Frame - Leading

Part No. 505588

ITEM	QTY.	PART NO.	DESCRIPTION
1	1	505590	ASSY, SUPPORT FRAME - FLEX - LEADING - BLK
2	1	505610	ASSY, ANGLE BRKT - L.H. - FLEX - LEADING - BLK
3	1	505614	ASSY, ANGLE BRKT - R.H. - FLEX - LEADING - BLK
4	8	250209	BOLT, U-SQ - 3/4 UNC X 8 ID X 6 IN - 2 IN THD - GR8 PL
5	24	250552	WASHER, FLAT 3/4IN GR8 PL
6	24	250451	NUT, HEX 3/4 UNC GR5 PL
7	4	250210	BOLT, U-SQ - 3/4 UNC X 6 ID X 6 IN - 2 IN THD - GR8 PL
8	4	250228	BOLT, U-SQ - 1/2 UNC X 2ID X 6 IN - 2 IN THD - GR5 PL
9	8	250555	WASHER, FLAT - 1/2 IN - GR8 - PL
10	8	250450	NUT, HEX 1/2 UNC GR5 PL

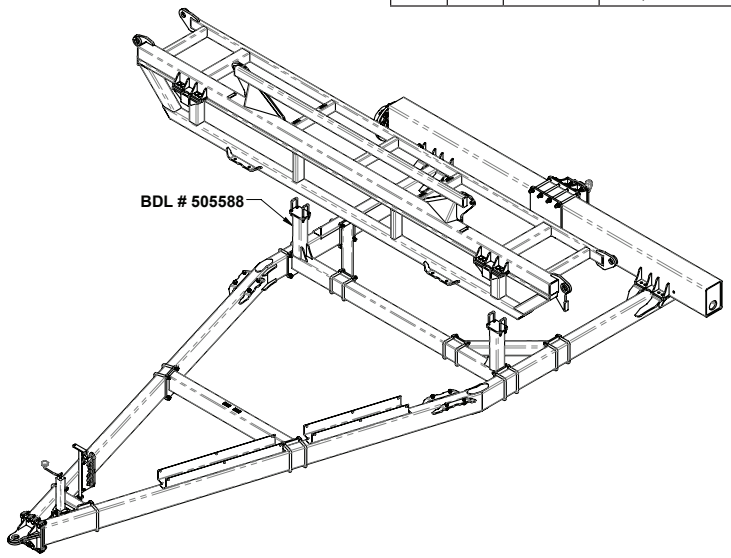

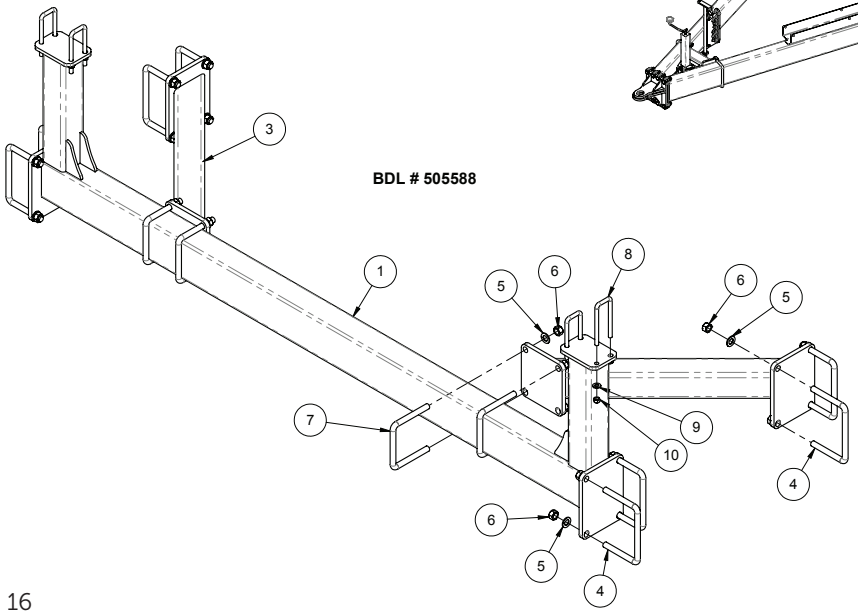

Parts Description:
Compressed Air System Mount Hdw
Part No. 505420

ITEM	QTY.	PART NO.	DESCRIPTION
1	1	505425	ASSY, AIR COMPRESSOR MNT - FLEX - BLK
2	1	402118-1	PLATE, FRMD 10 GA IN - COVER - COMPRESSOR RELAY
3	4	250552	WASHER, FLAT 3/4IN GR8 PL
4	4	250451	NUT, HEX 3/4 UNC GR5 PL
5	4	250036	BOLT, HEX 3/8 X 1 IN GR5 PL
6	4	250557	WASHER, FLAT - 3/8 IN GR8 PL
7	4	250453	NUT, HEX - 3/8 UNC PL
8	2	250106	BOLT, CARRIAGE - 5/16 X 3/4 IN UNC GR5 PL
9	2	250403	NUT, FLANGE - 5/16 UNC PL
10	1	402137-1	ASSY, COMPRESSOR MOUNT - PACBRAKE
11	1	257112	COMPRESSOR, KIT - 12VDC - PACBRAKE #HP10626
12	1	257153	TERMINAL STRIP - 2 POS 75A - WAYTEK #47382
13	1	257152	RELAY, CONTACTOR 12V - 80A - WAYTEK #77031
14	1	257109	FILTER, COMPRESSOR INTAKE - HOUSING W/FILTER
15	1	257108	TANK, AIR - 5 GAL
16	2	250122	BOLT, HEX 1/4 X 3/4 IN GR5 PL
17	8	250559	WASHER, FLAT - 1/4 IN - PL
18	6	250458	NUT, HEX - 1/4 UNC PL
19	4	250013	BOLT, HEX 1/2 X 1 1/4 IN GR5 PL
20	4	250555	WASHER, FLAT - 1/2 IN - GR8 - PL
21	4	250450	NUT, HEX 1/2 UNC GR5 PL
22	4	250033	BOLT, HEX 1/4 X 1 IN GR5 PL
23	4	408845	PLATE, CLAMP 10GA - CROSS ADAPTER MNT - YEL
24	2	250052	BOLT, HEX 1/4 X 2 IN GR5 PL
25	2	250507	NUT, LOCK - 1/4 UNC - STOVER - PL
26	2	505424	PLATE, BOLT 1/2IN - AIR COMPRESSOR MNT - FLEX - BLK
27	4	250041	BOLT, HEX 3/4 X 7 UNC GR5 PL
28	1	51205K319	ADAPTOR, BRASS - REDUCER - 3/8 MPT X 1/2 FPT
29	1	260571	ADAPTOR, BRASS - 1/2 MPT X 3/4 HB
30	1	256527	HOSE, RUBBER 3/4 IN (200 PSI)
31	1	260490	SCREEN, PRE-FILTER, COMPRESSOR INTAKE

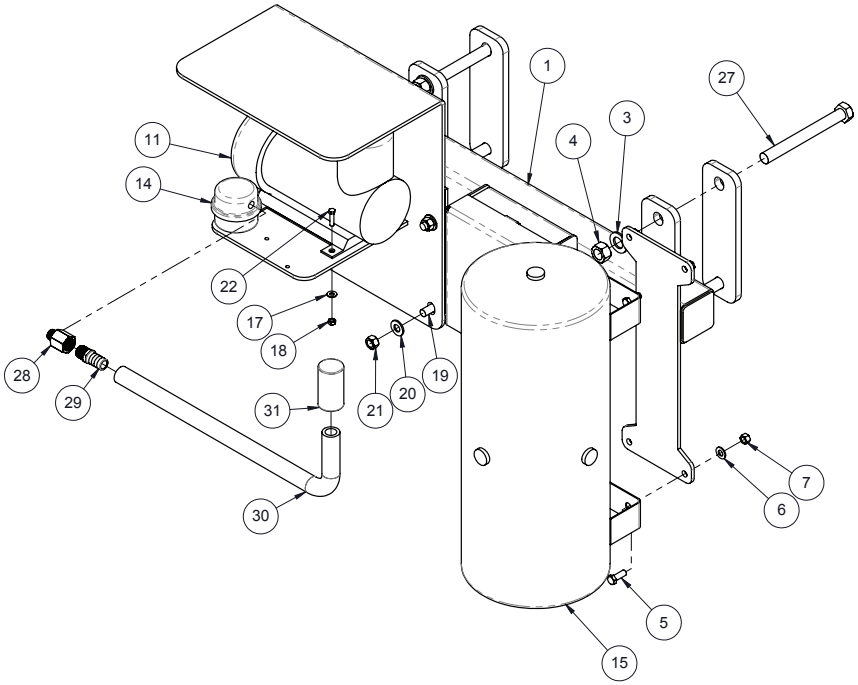

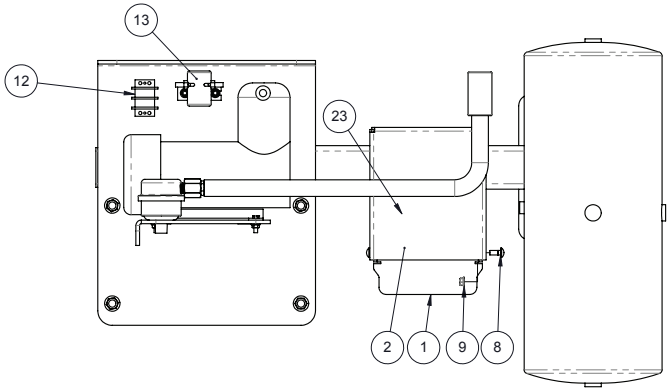

Parts Description:
Hose Holder - Flex

505199			
ITEM	QTY.	PART NO.	DESCRIPTION
1	1	503195-3	ASSY, HOSE HOLDER - FRT HITCH - T/B NOVA - BLK
2	1	400421	PLATE, 1/4 IN - HOSE HOLDER - BLK
3	1	400327	ASSY, LOCK BAR - HOSE HOLDER - BLK
4	1	400422	SHEET, 10 GA - ISO BULKHEAD - BLK
5	4	250122	BOLT, HEX 1/4 X 3/4 IN GR5 PL
6	1	250600	PIN, SPRING - 5/16 X 2 1/2 IN - PL
7	4	250458	NUT, HEX - 1/4 UNC PL
8	1	250507	NUT, LOCK - 1/4 UNC - STOVER - PL
9	1	250033	BOLT, HEX 1/4 X 1 IN GR5 PL
10	3	250559	WASHER, FLAT - 1/4 IN - PL
11	1	250594	PIN, QUICK/LOCK - 1/4 X 1 3/4 IN EFF - ROUND
12	1	250554	WASHER, FLAT - 1 IN GR8 PL
400319-1 (SUBSTITUTE ITEMS BELOW)			
1	1	400320-4	ASSY, HOSE HOLDER - FRT HITCH - BLK

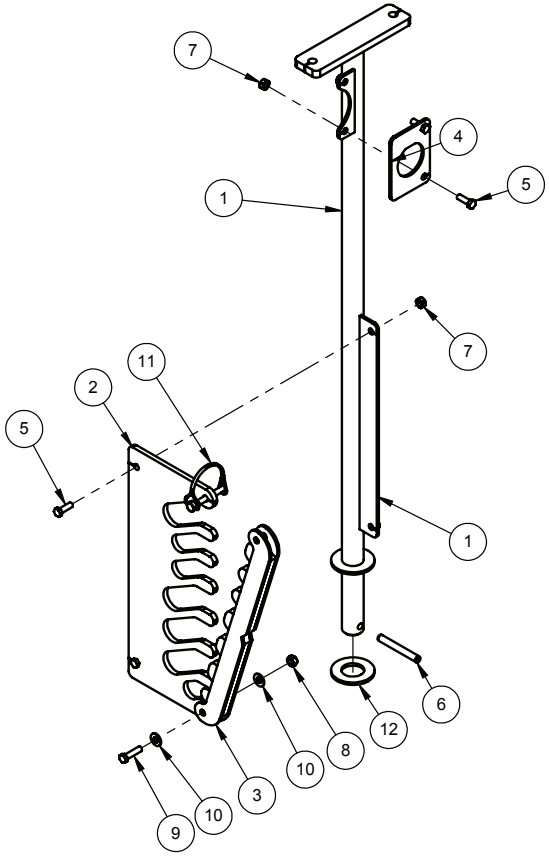

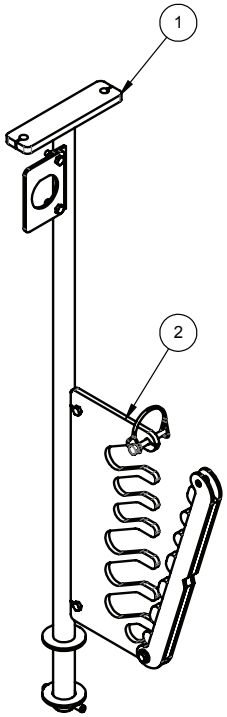

Parts Description:
Hydraulic Schematic Wing - Flex
Part No. 401271-1

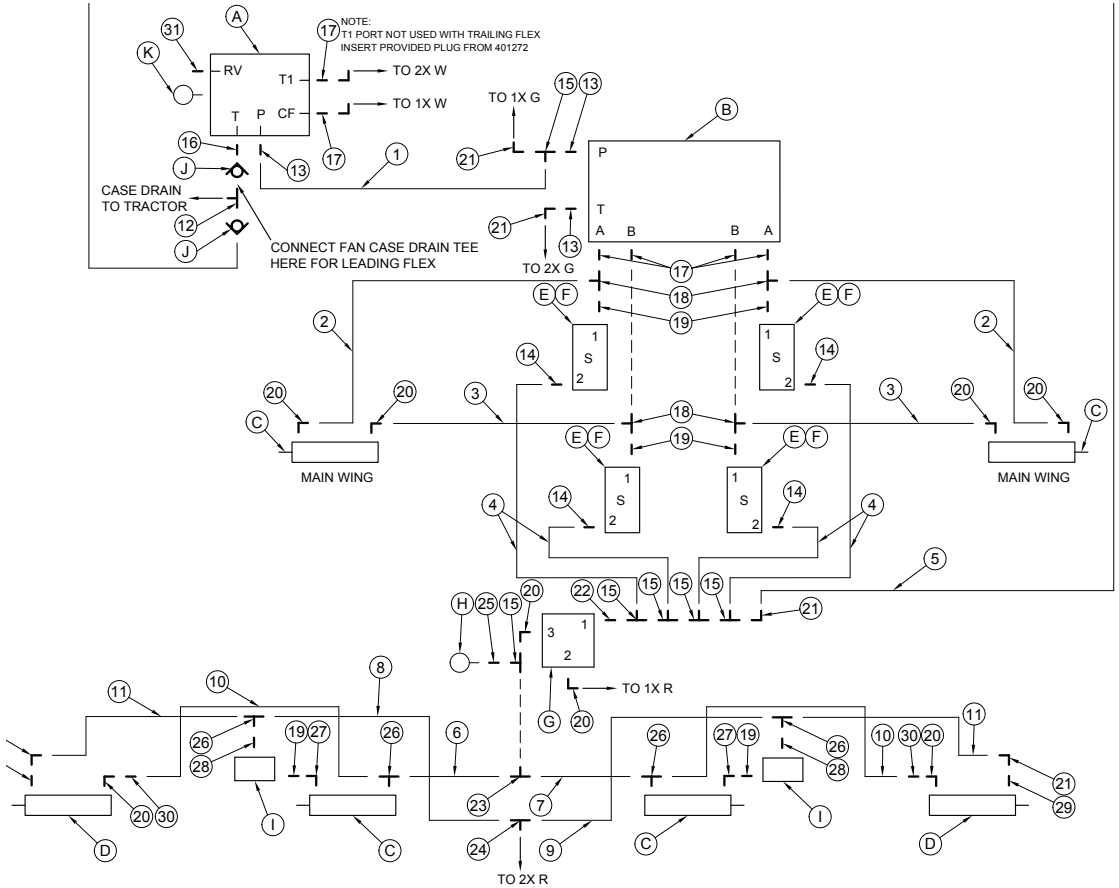

ITEM	QTY.	PART NO.	DESCRIPTION
1	1	258447	HOSE, 3/8-2WB X 49 LOA - 06 JIC F-SW X 06 JIC F-SW
2	2	258449	HOSE, 3/8-2WB X 86 1/2 LOA - 06 JIC F-SW X 08 JIC F-SW
3	2	258451	HOSE, 3/8-2WB X 63 LOA - 06 JIC F-SW X 08 JIC F-SW
4	4	258452	HOSE, 3/8-2WB X 28 LOA - 06 JIC F-SW X 06 JIC F-SW
5	1	258453	HOSE, 3/8-2WB X 70 LOA - 06 JIC F-SW X 08 JIC F-SW
6	1	258454	HOSE, 3/8-2WB X 176 LOA - 06 JIC F-SW X 06 JIC F-SW
7	1	258455	HOSE, 3/8-2WB X 188 LOA - 06 JIC F-SW X 06 JIC F-SW
8	1	258456	HOSE, 3/8-2WB X 209 LOA - 06 JIC F-SW X 06 JIC F-SW
9	1	258457	HOSE, 3/8-2WB X 203 LOA - 06 JIC F-SW X 06 JIC F-SW
10	2	258458	HOSE, 3/8-2WB X 118 LOA - 06 JIC F-SW X 06 JIC F-SW
11	2	258459	HOSE, 3/8-2WB X 135 LOA - 06 JIC F-SW X 06 JIC F-SW
12	1	258028	TEE, 08 JIC M X M X M
13	3	257992	CONNECTOR, 10 ORB M X 06 JIC M
14	4	258053	CONNECTOR, 08 ORB M X 06 JIC Mw
15	6	258025	TEE, 06 JIC F-SW X 06 JIC M X 06 JIC M - RUN
16	1	257977	CONNECTOR, 10 ORB M X 08 JIC F-SW
17	6	258050	CONNECTOR, 08 ORB M X 08 JIC M
18	4	258020	TEE, 08 JIC F-SW X 08 JIC M X 08 JIC M - RUN
19	6	258055	CONNECTOR, 08 ORB M X 08 JIC F-SW
20	8	258002	EL, 90D - 06 JIC M X 06 ORB M
21	5	258005	EL, 90D - 06 JIC M X 06 JIC F-SW
22	1	258051	CONNECTOR, 06 ORB M X 06 JIC M
23	1	258026	TEE, 06 JIC M X 06 JIC M X 06 JIC F-SW - BRANCH
24	1	258024	TEE, 06 JIC M X 06 JIC M X 06 JIC M
25	1	258038	CONNECTOR, 06 JIC F-SW X 1/4 NPT F
26	4	258022	TEE, 06 JIC M X 06 JIC M X 06 ORB M - BRANCH
27	2	258006	EL, 90D - 06 ORB M X 08 JIC M
28	2	258036	CONNECTOR, 08 ORB M X 06 ORB F
29	2	257980	CONNECTOR, 06 ORBM X 06 JIC M - .020 ORIFICE
30	2	257978	CONNECTOR, 06 JIC M X 06 JIC F - .047 ORIFICE
31	1	258395	BREATHER, 1/4NPT M - SINTERED BRONZE
A	1	260719	MANIFOLD, REDUCING-RELIEVING - RAVEN
B	1	258505	MANIFOLD, HYD - 2 VALVE D03 - 3 POS / 4 WAY
C	4	258510	CYL, HYD 3 X 24 IN - WING LIFT
D	2	258550	CYL, HYD 2 1/2 X 8 IN - ACTIVE WING/SMART HITCH
E	4	258444	MANIFOLD - SUN - FAJ
F	4	258256	RELIEF VALVE - SUN - RDDA-LBN
G	1	258212	MANIFOLD - REDUCE/RELIEVE - DELTA - DF-PRP-00-3000-FS - LIFT KIT
H	1	258094	GAUGE, PRESSURE - SPG-1500P 1/4 NPT - GLYCERINE FILLED - STEM MOUNT
I	2	258209	MANIFOLD - HYD - WING LOCK - M80 - DELTA DE-S2H-00-DHC12-ES
J	2	257999	VALVE, CHECK - INLINE - 08 JIC M X F - VONBERG - 1908MF-03
K	1	258092	GAUGE, PRESSURE - SPG-63-1500-S-U - GLYCERINE FILLED

Parts Description:

Hydraulic Schematic Extensions - Flex - Trailing

Part No. 401272-1

ITEM	QTY.	PART NO.	DESCRIPTION
1	1	258465	HOSE, 1/2-2WB X 172LOA - 08 JIC F-SW X 08 ORB M
2	2	258466	HOSE, 3/8-2WB X 218LOA - 06JIC F-SW X 08ORB M
3	1	258467	HOSE, 3/8-2WB X 232LOA - 06JIC F-SW X 08ORB M
4	1	258468	HOSE, 3/8-2WB X 228LOA - 06JIC F-SW X 08ORB M
5	1	258077	COUPLER, FEMALE - PIONEER - 08 ORB F
6	1	258071	COUPLER, MALE - NON-VALVED - 1/2 NPT F
7	1	258472	HOSE, 1/2-2WB X 172LOA - 08JIC F-SW X 1/2 NPT M
8	1	258074	CAP, DUST - STRAIGHT THROUGH
9	4	258076	COUPLER, MALE - PIONEER - 08 ORB F
10	1	258042	PLUG, 08 ORB M

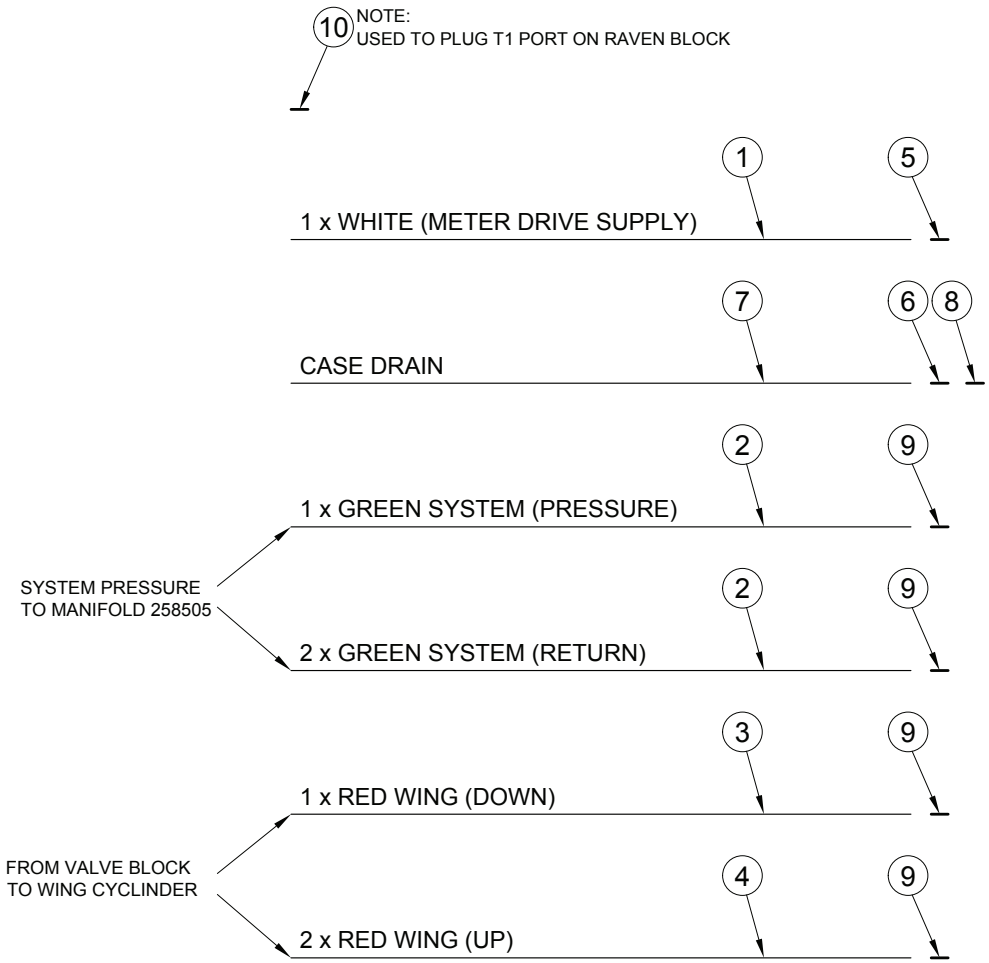

Parts Description:

Hydraulic Schematic Extensions - Flex - Leading

Part No. 401273-1

ITEM	QTY.	PART NO.	DESCRIPTION
1	2	258469	HOSE, 1/2-2WB X 112LOA - 08JIC F-SW X 08JIC F-SW
2	2	258466	HOSE, 3/8-2WB X 218LOA - 06JIC F-SW X 08ORB M
3	1	258467	HOSE, 3/8-2WB X 232LOA - 06JIC F-SW X 08ORB M
4	1	258468	HOSE, 3/8-2WB X 228LOA - 06JIC F-SW X 08ORB M
5	1	258050	CONNECTOR, 08 ORB M X 08 JIC M
6	1	258057	CONNECTOR, 1/2 NPT M X 08 JIC M
7	1	258077	COUPLER, FEMALE - PIONEER - 08 ORB F
8	1	258073	COUPLER, FEMALE - NON-VALVED - 1/2 NPT F
9	4	258076	COUPLER, MALE - PIONEER - 08 ORB F
10	1	258473	HOSE, 1/2-2WB X 238LOA - 08JIC F-SW X 1/2 NPT M
11	1	258071	COUPLER, MALE - NON-VALVED - 1/2 NPT F
12	1	258074	CAP, DUST - STRAIGHT THROUGH

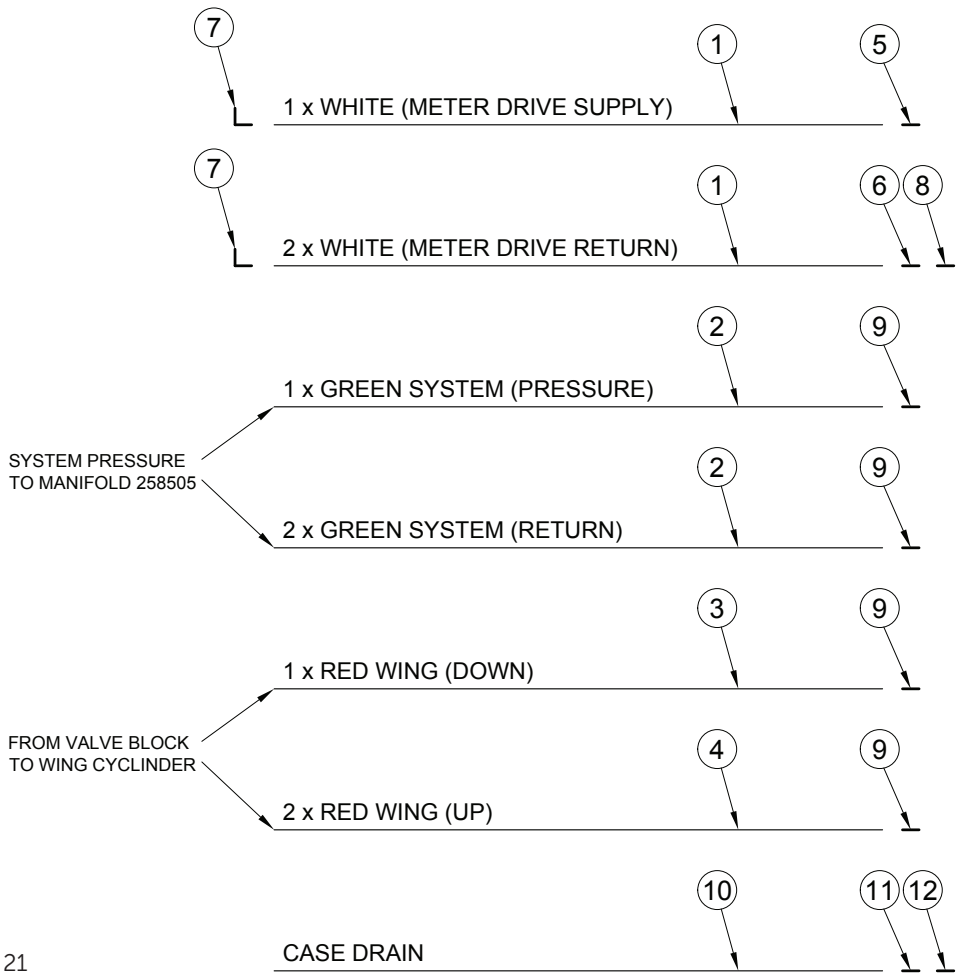

Parts Description:
Hydraulic Schematic
Dual Fan
Part No. 401274-1

ITEM	QTY.	PART NO.	DESCRIPTION
1	4	258471	HOSE, 3/4-2WB X 328 LOA - 12 JIC F-SW X 10 ORB M
2	4	258052	CONNECTOR, 12 ORB M X 12 JIC M
3	4	258079	COUPLER, MALE - PIONEER - 10 ORB F
4	1	258495	HOSE, 1/2 - 2WB X 116 LOA - 08 JIC F-SW X 08 JIC F-SW
5	1	258057	CONNECTOR, 1/2 NPT M X 08 JIC M
6	1	258071	COUPLER, MALE - NON-VALVED - 1/2 NPT F
7	1	258020	TEE, 08 JIC F-SW X 08 JIC M X 08 JIC M - RUN
A	4	257972	COUPLER, FEMALE - STUCCHI - 12 ORB F

NOTE : LETTERED COMPONENTS ARE PICKE
SEPERATELY FROM HYDRAULIC KIT

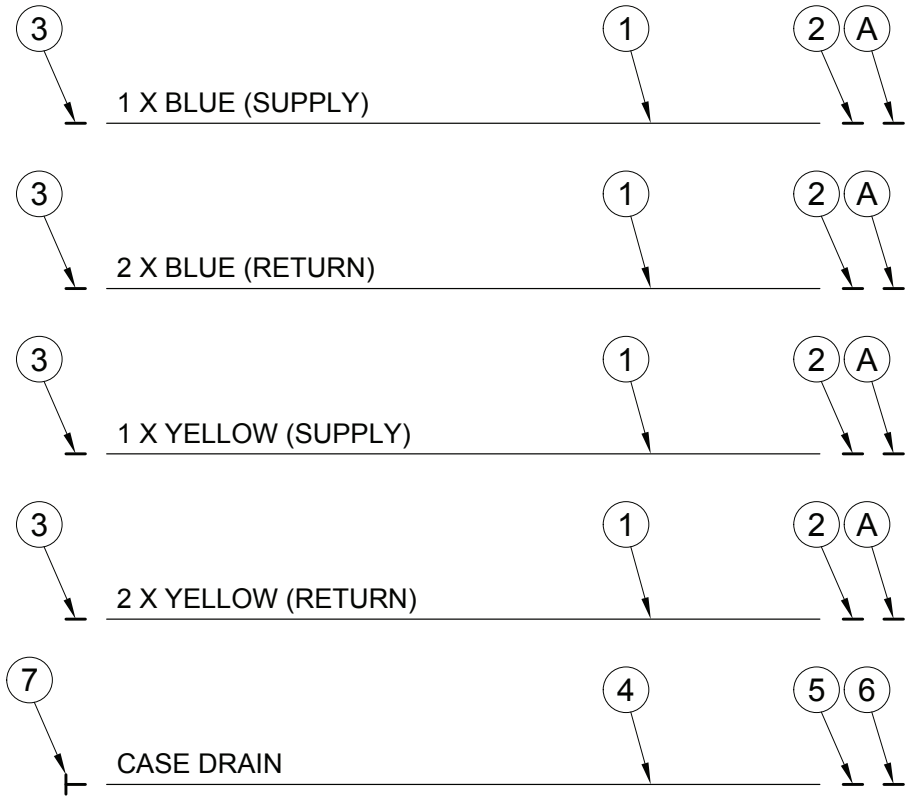

DUAL FAN SUPPLY
AND RETURN LINES

Parts Description:
Hydraulic Schematic Single Fan
Part No. 401275-1

ITEM	QTY.	PART NO.	DESCRIPTION
1	2	258471	HOSE, 3/4-2WB X 328 LOA - 12 JIC F-SW X 10 ORB M
2	2	258052	CONNECTOR, 12 ORB M X 12 JIC M
3	2	258079	COUPLER, MALE - PIONEER - 10 ORB F
4	1	258495	HOSE, 1/2 - 2WB X 116 LOA - 08 JIC F-SW X 08 JIC F-SW
5	1	258057	CONNECTOR, 1/2 NPT M X 08 JIC M
6	1	258071	COUPLER, MALE - NON-VALVED - 1/2 NPT F
7	1	258020	TEE, 08 JIC F-SW X 08 JIC M X 08 JIC M - RUN
A	4	257972	COUPLER, FEMALE - STUCCHI - 12 ORB F

NOTE : LETTERED COMPONENTS ARE PICKED SEPERATELY FROM HYDRAULIC KIT

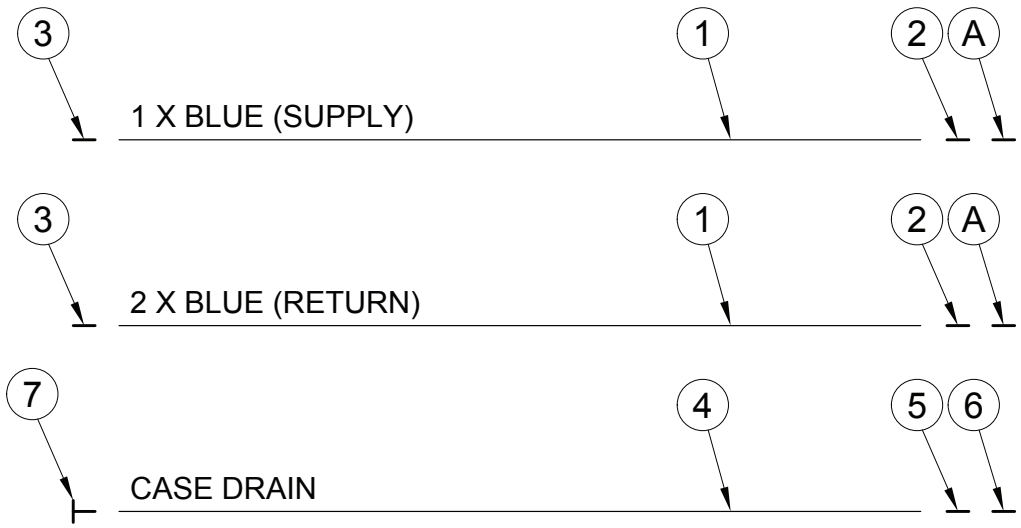

SINGLE FAN SUPPLY
AND RETURN LINES

Parts Description:

Control Box Wire Harness

Part No. 505652

ITEM	QTY.	PART NO.	DESCRIPTION
1	1	257060	CONNECTOR, 6 PIN - SHROUD HALF - WAYTEK
2	14	256986	WIRE, 16 GA - RED - WX16-2
3	21	256985	WIRE, 16 GA - BROWN - WX16-1
4	21	256992	WIRE, 16 GA - GREY - WX16-8
5	21	256988	WIRE, 16 GA - YELLOW - WX16-4
6	21	256989	WIRE, 16 GA - GREEN - WX16-5
7	21	256990	WIRE, 16 GA - BLUE - WX16-6
8	33	256993	WIRE, 16 GA - WHITE - WX16-9
9	4	257018	SWITCH, WAYTEK - MOM ON/OFF/MOM ON - 3 TERMINAL - UNLIT
10	4	257025	SWITCH ACTUATOR - BLACK - NO LENS COLOR
11	2	257027	SWITCH MOUNTING PANEL - END - WAYTEK
12	2	257020	SWITCH, WAYTEK - ON/OFF - 3 TERMINAL - LIGHT
13	20	257043	LOOM, SLIT - 3/4 IN - FLAME RETARDANT - BLACK
14	2	257045	CLIP, LOOM FITTING - 3/4 IN - WAYTEK
15	1	257080	FUSE HOLDER, PANEL MOUNT - WAYTEK - 1/4 IN PUSH ON
16	1	257081	FUSE, 20 AMP
17	1	505660	PLATE, FRMD 18GA - CONTROL BOX FRONT - FLEX
18	1	501222-1	PLATE, FRMD 18GA - CONTROL BOX BACK - NOVA
19	2	259968	BASE, RAM MOUNT - 1" BALL
20	1	259970	ARM, DOUBLE SOCKET - RAM MOUNT
21	1	259969	BASE, SUCTION - RAM MOUNT
22	1	257044	TEE, LOOM FITTING - 3/4 X 3/4 X 1/4 IN - WAYTEK
23	12	257046	TEE, LOOM FITTING - 3/4 X 3/4 X 1/4 IN - WAYTEK
24	2	257048	TERMINAL - RING - 1/2 IN - 16/14 GA - WAYTEK
25	2	257020	SWITCH, WAYTEK - ON/OFF - 3 TERMINAL - LIGHT
26	2	257026	SWITCH ACTUATOR - BLACK - GREEN LENS
27	6	257076	SEAL, CABLE - GREY - WEATHER PACK
28	6	257051	TERMINAL, MALE - WEATHER PACK - 16-14GA

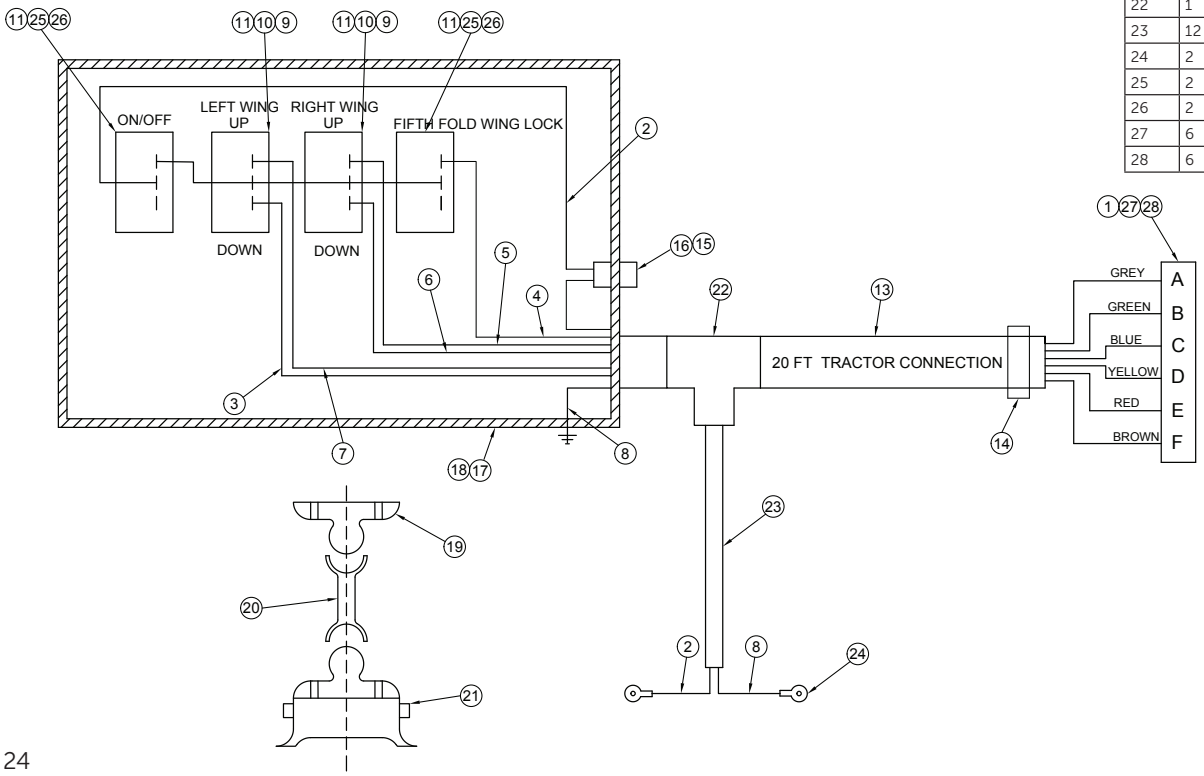

Parts Description:
Valve Wiring
Part No. 505650

ITEM	QTY.	PART NO.	DESCRIPTION
1	1	257059	CONNECTOR, 6 PIN - TOWER HALF - WAYTEK
2	21	256985	WIRE, 16 GA - BROWN - WX16-1
3	21	256988	WIRE, 16 GA - YELLOW - WX16-4
4	21	256989	WIRE, 16 GA - GREEN - WX16-5
5	21	256990	WIRE, 16 GA - BLUE - WX16-6
6	21	256992	WIRE, 16 GA - GREY - WX16-8
7	24	256993	WIRE, 16 GA - WHITE - WX16-9
8	6	257008	CONNECTOR, DIN -932106-400 - C/W GASKET
9	24	257043	LOOM, SLIT - 3/4 IN - FLAME RETARDANT - BLACK
10	2	257045	CLIP, LOOM FITTING - 3/4 IN - WAYTEK
11	44	257086	CABLE, 2 WIRE - 16 GA - SJ16-2
12	1	257090	SPLICE KIT - WAYTEK - 6 WAY TPA
13	1	257091	SPLICE KIT - WAYTEK - 6 CONTACT BODY - 280 SERIES
14	1	257092	SPLICE KIT - WAYTEK - CAP - 280 SERIES
15	1	257093	SPLICE KIT - WAYTEK - 6 GANG COMMON BAR
16	2	257094	SPLICE KIT - WAYTEK - CAVITY PLUG - GREEN
17	6	257095	SPLICE KIT - WAYTEK - SPLICE TERMINAL - FEMALE - 31075
18	12	257051	TERMINAL, MALE - WAYTEK WEATHER PACK - 16-14GA
19	12	257052	TERMINAL, FEMALE - WAYTEK WEATHER PACK - 16-14GA
20	6	257065	CONNECTOR, 2 PIN - TOWER HALF - WAYTEK
21	6	257066	CONNECTOR, 2 PIN - SHROUD HALF - WAYTEK
22	24	257076	SEAL, CABLE - WAYTEK - GREY - #39001

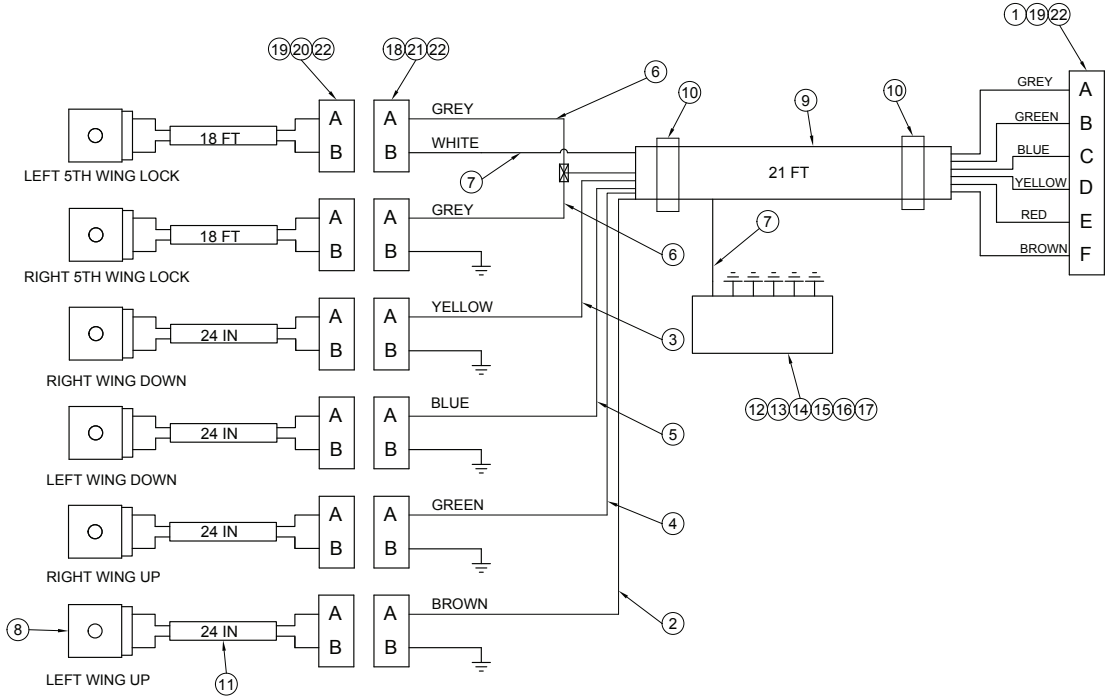

Parts Description:
Nova Extension
Part No. 505651

ITEM	QTY.	PART NO.	DESCRIPTION
1	1	257059	CONNECTOR, 6 PIN - TOWER HALF - WAYTEK
2	1	257060	CONNECTOR, 6 PIN - SHROUD HALF - WAYTEK
3	38	256985	WIRE, 16 GA - BROWN - WX16-1
4	38	256992	WIRE, 16 GA - GREY - WX16-8
5	38	256988	WIRE, 16 GA - YELLOW - WX16-4
6	38	256989	WIRE, 16 GA - GREEN - WX16-5
7	38	256990	WIRE, 16 GA - BLUE - WX16-6
8	38	256993	WIRE, 16 GA - WHITE - WX16-9
9	38	257043	LOOM, SLIT - 3/4 IN - FLAME RETARDANT - BLACK
10	2	257045	CLIP, LOOM FITTING - 3/4 IN - WAYTEK
11	6	257052	TERMINAL, FEMALE - WEATHER PACK - 16-14GA
12	6	257051	TERMINAL, MALE - WEATHER PACK - 16-14GA

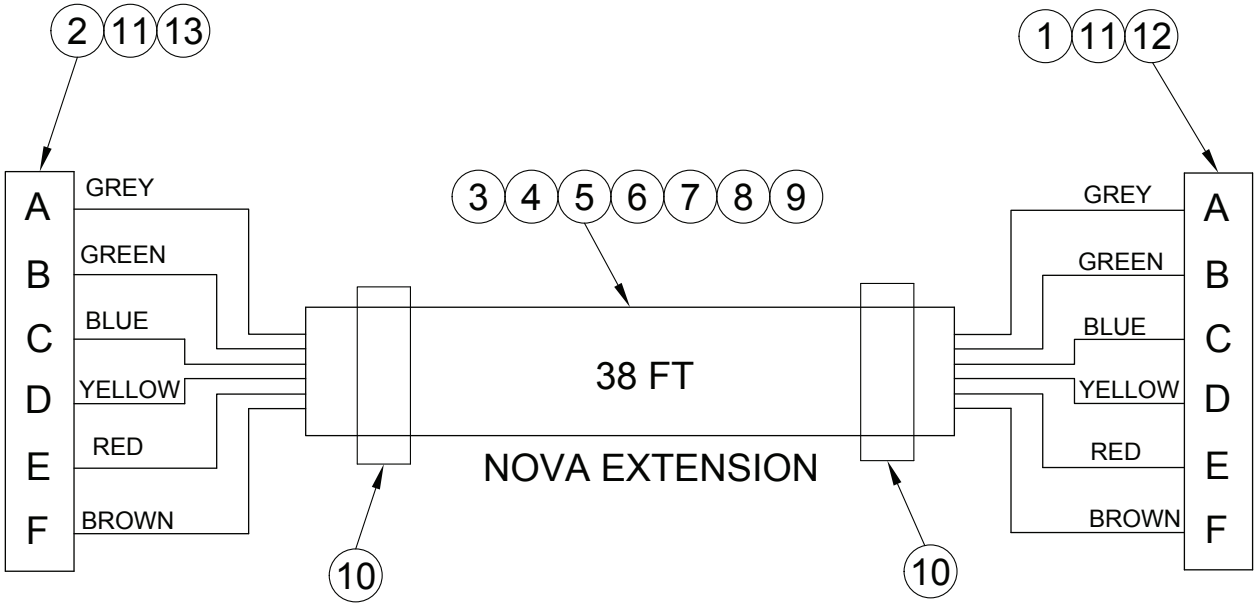

Parts Description:

Clearance Lights Main Harness - Trailing

Part No. 505418

ITEM	QTY.	PART NO.	DESCRIPTION
1	1	257012	PLUG, CONNECTOR - 7 WAY - PLASTIC - WAYTEK
2	1	257014	CABLE GUARD SPRING - PLUG - WAYTEK
3	1	257100	TERMINAL BOX
4	1	257101	TERMINAL STRIP - 4 POLE - #10
5	2	257064	CONNECTOR, 3 PIN - SHROUD HALF - WAYTEK
6	6	257051	TERMINAL, MALE - WAYTEK WEATHER PACK - 16-14GA
7	6	257069	SEAL, CABLE - WAYTEK - BLUE
8	3	257083	STRAIN RELIEF - FLEX NUT - 1/2 NPT - WAYTEK
9	3	257084	STRAIN RELIEF - LOCK NUT - 1/2 NPT - WAYTEK
10	3	257085	STRAIN RELIEF - SEAL RING - 1/2 IN - WAYTEK
11	1	257036	CABLE, 4 WIRE - 18 FT - 4/14 GA
12	1	257036	CABLE, 4 WIRE - 10.5 FT - 4/14 GA

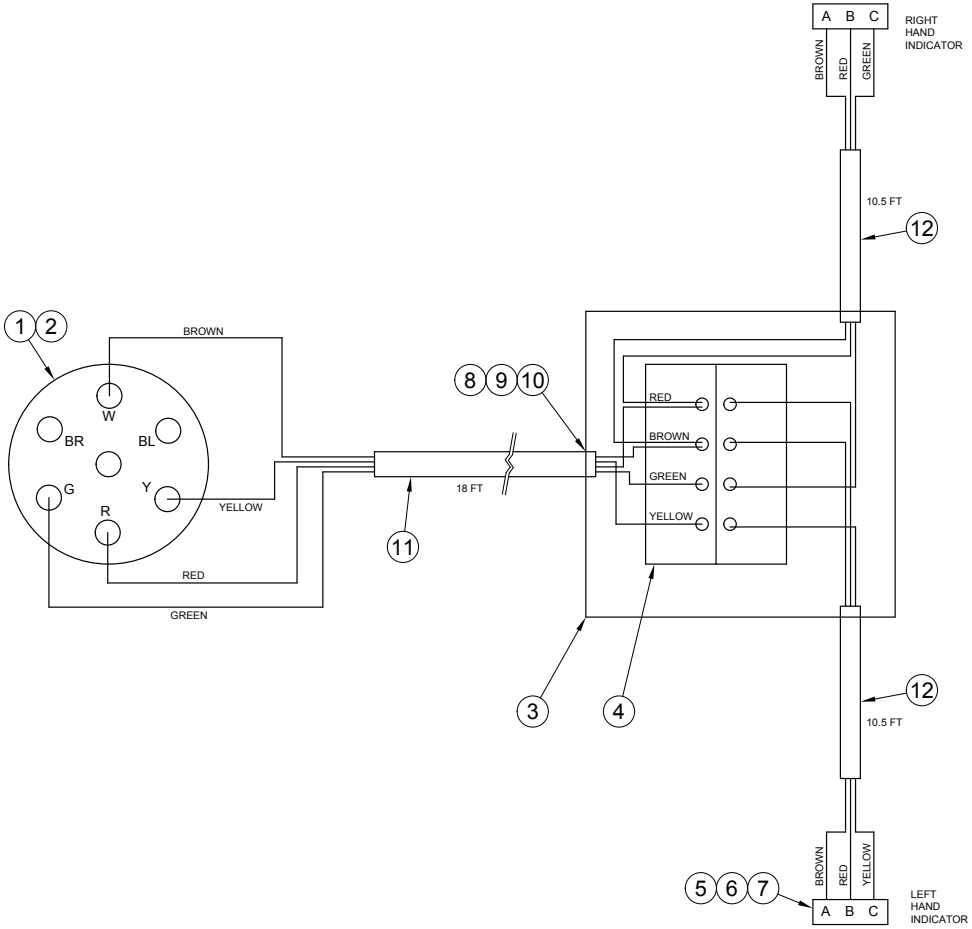

Parts Description:

Clearance Lights Main Harness - Leading

Part No. 505631

ITEM	QTY.	PART NO.	DESCRIPTION
1	1	257012	PLUG, CONNECTOR - 7 WAY - PLASTIC - WAYTEK
2	1	257014	CABLE GUARD SPRING - PLUG - WAYTEK
3	1	257100	TERMINAL BOX
4	1	257101	TERMINAL STRIP - 4 POLE - #10
5	2	257064	CONNECTOR, 3 PIN - SHROUD HALF - WAYTEK
6	6	257051	TERMINAL, MALE - WAYTEK WEATHER PACK - 16-14GA
7	6	257069	SEAL, CABLE - WAYTEK - BLUE
8	1	257013	SOCKET, CONNECTOR - 7 WAY - PLASTIC - WAYTEK
9	1	257015	BOOT - SOCKET - WAYTEK
10	4	257083	STRAIN RELIEF - FLEX NUT - 1/2 NPT - WAYTEK
11	4	257084	STRAIN RELIEF - LOCK NUT - 1/2 NPT - WAYTEK
12	4	257085	STRAIN RELIEF - SEAL RING - 1/2 IN - WAYTEK
13	1	257016	BRACKET, MNT - 7 WAY SOCKET - BLACK - WAYTEK
14	1	257036	CABLE, 4 WIRE - 216 IN - 4/14 GA
15	1	257036	CABLE, 4 WIRE - 108 IN - 4/14 GA
16	2	257036	CABLE, 4 WIRE - 126 IN - 4/14 GA

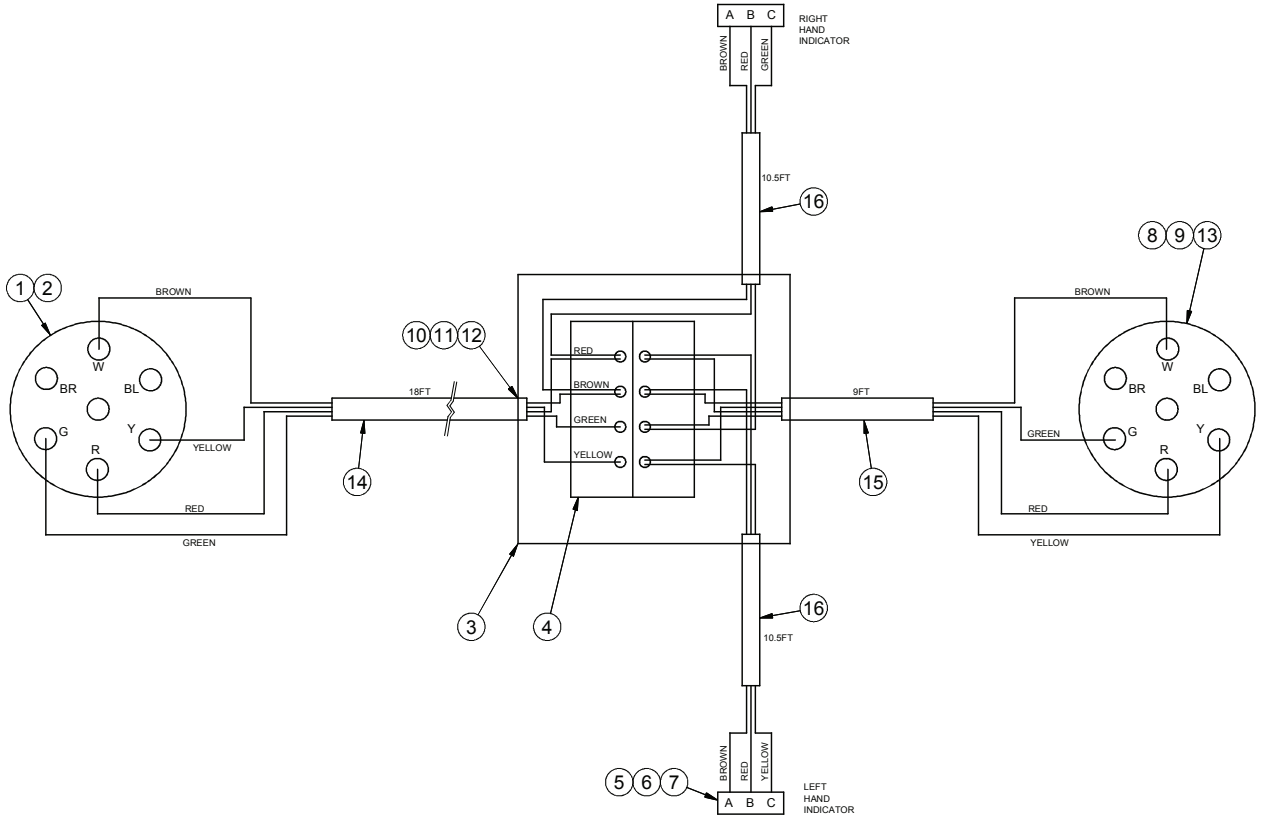

March 2017