SEEDMASTER

DIRECT SEED WITH PINPOINT ACCURACY.

2015 Nova Parts Manual

Phone: (306)721-3001

Toll Free: 1-888-721-3001

Fax: (306)721-3002

www.seedmaster.ca

Replacement Cost

$29.95 CAD

Table of Contents

FRAME

2 780/820 Nova Frame
4 520/560 Nova Frame
6 630 T/B Nova Frame
8 Axle - Dual 710/70R38
10 Axle - Single 800/65R32
12 Tank Cradle/Load Cells
14 Hitch Jack
16 Hitch Jack - T/B Nova
18 Hitch Hose Holder
20 Air/Elec Panel
22 Air/Elec Panel - T/B Nova
24 Clearance Lights
26 2½” Delivery Hose Hitch Disconnect
28 2½” Delivery Hose Hitch Disconnect - T/B Nova
30 Rear Hitch - 520/780 Nova
32 Rear Hitch - 560/820 Nova
34 Rear Hitch - 630 T/B Nova

TANKS

36 Meter Box - Standard Tank
38 Meter Box - Canola Tank
40 Common Drive Shaft
42 Canola Tank Drive Shaft
44 Tank to Meter Transition
46 Tank Lid
48 40Bu Canola Tank
50 110Bu T/B Nova Tank
52 Fans/Air Splitter
54 Fans/Air Splitter - T/B Nova
56 Rear Walkway - 820/560 Nova
60 Rear Walkway - 780/520 Nova
62 Side Walkway - 630 T/B Nova
64 Nova Y-Section Bundles - Main Tank/Canola Tank
66 T/B Nova Y-Section Bundles - Main Tank/110Bu Tank

CONVEYOR

68 28FT Conveyor - 780/820 Nova
72 25FT Conveyer - 520/560/630 Nova

HYDRAULIC SCHEMATIC

76 Meter Drive
77 Meter Drive +1 Tank
78 Meter Drive - T/B Nova
79 Lids - Single Shoot
80 Lids - Dual Shoot
81 Lids +1 Tank
82 Lids - Canola Tank
83 Lids - 110Bu Tank - T/B Nova
84 Dual Fans
86 Single Fan
88 Dual Fans - T/B Nova
90 Single Fan - T/B Nova
92 28FT Conveyor - 780/820 Nova
94 25FT Conveyor - 520/560/630 Nova

ELECTRICAL SCHEMATIC

96 Clearance Lights
98 Conveyor
100 Raven

Parts Description:

780/820 Nova Frame

ITEM	QTY.	PART NO.	DESCRIPTION
1	1	500140	BDL, REAR AXLE - NOVA - DUAL 710/70R38
2	2	500100-1	ASSY, RAIL - SIDE - FRAME - NOVA - BLK
3	1	500190	ASSY, BEAM - FRT CROSS - NOVA - BLK
4	1	500150	ASSY, BEAM - FRONT HITCH - RH - NOVA - BLK
5	1	500151	ASSY, FRONT HITCH - LH - NOVA
6	1	500170	ASSY, FRT HITCH TONGUE - NOVA - BLK
7	1	254513	DRAWBAR - HOLLAND - DB-100FQ1
8	4	500165	PLATE, CLAMP 1/2 IN - U-CLAMP - NOVA - BLK
9	2	500166	PLATE, SHIM 1/2 IN - U-CLAMP - NOVA - BLK
10	1	500205	BDL, HITCH JACK - NOVA
11	4	250029	BOLT, HEX 7/8 X 4 1/2 UNC GR5 PL
12	4	404225	BUSH, 1 3/4OD X .9ID X 1 3/8 IN - FRONT CASTOR
13	80	250553	WASHER, FLAT 7/8IN GR8 PL
14	84	250452	NUT, HEX - 7/8 UNC PL
15	64	250006	BOLT, HEX 7/8 X 2 1/4 UNC GR5 PL
16	12	250044	BOLT, HEX 7/8 X 3 IN UNC GR5 PL
17	2	500230	BDL, HYD HOSE HOLDERS - FRONT HITCH - NOVA
18	1	500950	ASSY, CRADLE - MID HITCH - REAR - 2 1/2 HOSES - NOVA - BLK
19	1	500955	ASSY, CRADLE - MID HITCH - 2 1/2 HOSES - NOVA - BLK
20	4	250234	BOLT, U-SQ - 1/2 UNC X 12 ID X 8 IN - 2 IN THD - GR5 PL
21	8	250555	WASHER, FLAT - 1/2 IN - GR8 - PL
22	8	250450	NUT, HEX 1/2 UNC GR5 PL

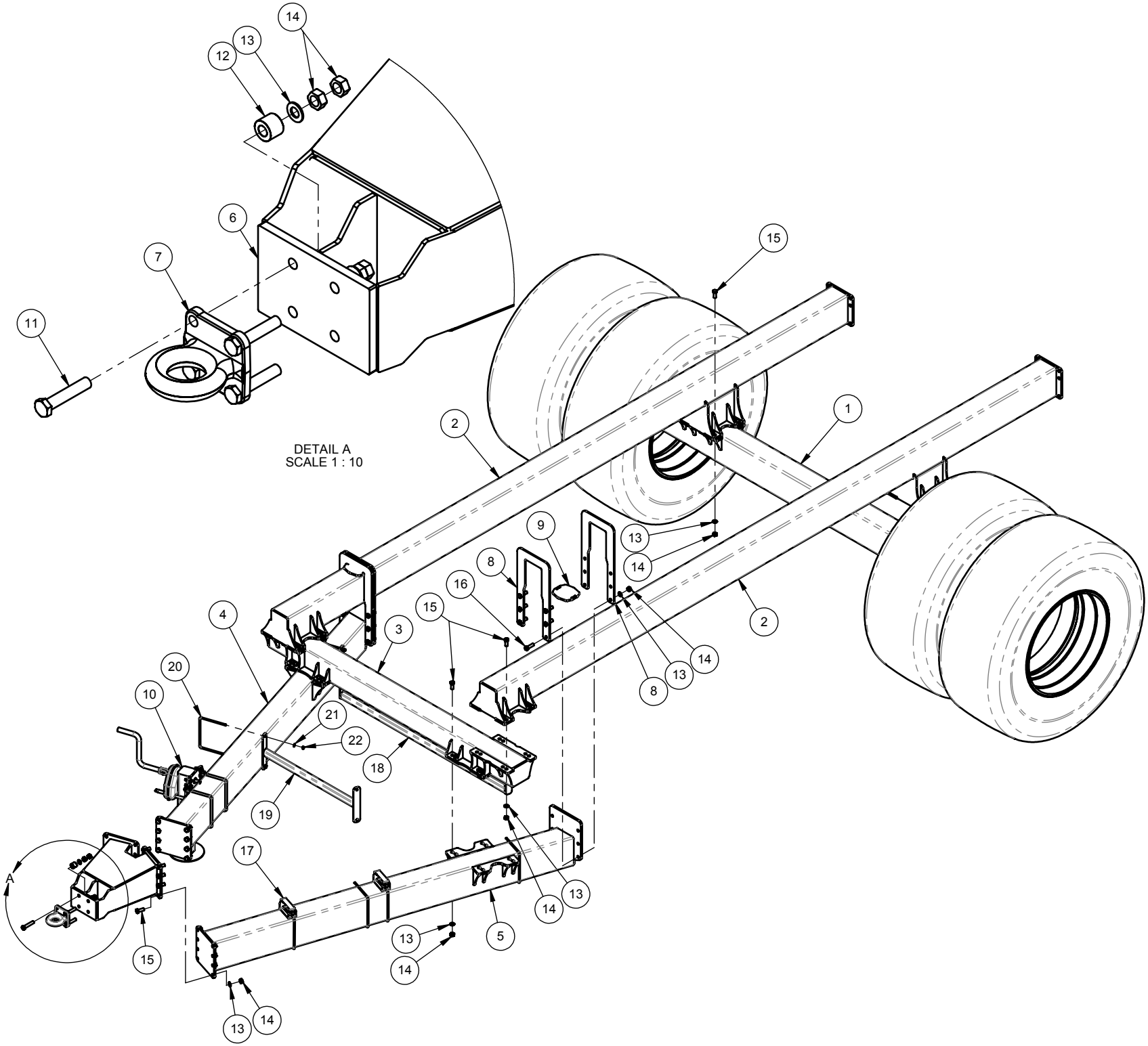
DETAIL A
SCALE 1 : 10
A
1
2
2
3
4
5
6
7
8
8
9
10
11
12
13
13
13
13
13
13
13
14
14
14
14
14
14
15
15
15
16
17
18
19
20
21
22

Parts Description:

520/560 Nova Frame

ITEM	QTY.	PART NO.	DESCRIPTION
1	1	500141	BDL, REAR AXLE - NOVA - DUAL 800/65R32
2	2	501500	ASSY, RAIL - SIDE - FRAME - NOVA 520BU - BLK
3	1	500190	ASSY, BEAM - FRT CROSS - NOVA - BLK
4	1	501520	ASSY, BEAM - FRONT HITCH - RH - NOVA 520BU - BLK
5	1	501521	ASSY, FRONT HITCH - LH - NOVA - 520BU - BLK
6	1	500170	ASSY, FRT HITCH TONGUE - NOVA - BLK
7	1	254513	DRAWBAR - HOLLAND - DB-100FQ1
8	4	500165	PLATE, CLAMP 1/2 IN - U-CLAMP - NOVA - BLK
9	2	500166	PLATE, SHIM 1/2 IN - U-CLAMP - NOVA - BLK
10	1	500205	BDL, HITCH JACK - NOVA
11	4	250029	BOLT, HEX 7/8 X 4 1/2 UNC GR5 PL
12	4	404225	BUSH, 1 3/4OD X .9ID X 1 3/8 IN - FRONT CASTOR
13	80	250553	WASHER, FLAT 7/8IN GR8 PL
14	84	250452	NUT, HEX - 7/8 UNC PL
15	64	250006	BOLT, HEX 7/8 X 2 1/4 UNC GR5 PL
16	12	250044	BOLT, HEX 7/8 X 3 IN UNC GR5 PL
17	1	500955	ASSY, CRADLE - MID HITCH - 2 1/2 HOSES - NOVA - BLK
18	4	250234	BOLT, U-SQ - 1/2 UNC X 12 ID X 8 IN - 2 IN THD - GR5 PL
19	8	250555	WASHER, FLAT - 1/2 IN - GR8 - PL
20	8	250450	NUT, HEX 1/2 UNC GR5 PL
21	1	500950	ASSY, CRADLE - MID HITCH - REAR - 2 1/2 HOSES - NOVA - BLK
22	2	500230	BDL, HYD HOSE HOLDERS - FRONT HITCH - NOVA

HDW BAGS	DESCRIPTION
500388	BAG, HDW - FRAME ASSY - SAFETY CHAIN
500384	BAG, HDW - FRAME ASSY - U-CLAMPS
500383	BAG, HDW - FRAME ASSY - MAIN CONNECTIONS
500380	BAG, HDW - FRAME ASSY - DRAWBAR
500381	BAG, HDW - FRAME ASSY - FRONT HITCH

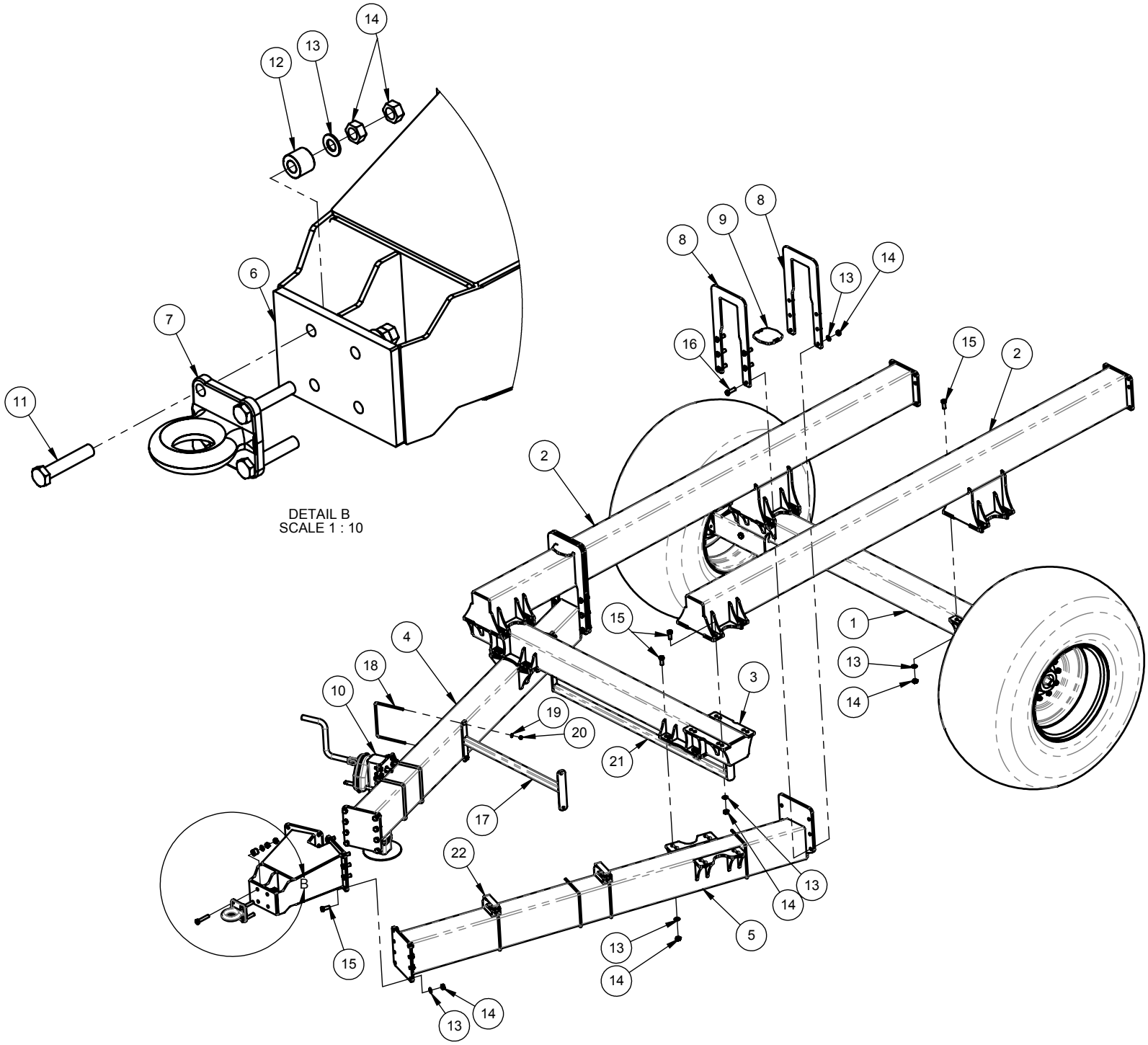
DETAIL B
SCALE 1 : 10
B

Parts Description:

630 T/B Nova Frame

ITEM	QTY.	PART NO.	DESCRIPTION
1	2	503290	ASSY, RAIL - SIDE - T/B NOVA - BLK
2	1	500140	BDL, REAR AXLE - NOVA - DUAL 710/70R38
3	1	500190-1	ASSY, BEAM - FRT CROSS - NOVA - BLK
4	1	503280	ASSY, BEAM - FRONT HITCH - LH - T/B NOVA - BLK
5	1	503285	ASSY, BEAM - FRONT HITCH - RH - T/B NOVA - BLK
6	1	503295	ASSY, FRT HITCH TONGUE - TOW BETWEEN NOVA - BLK
7	1	503305	ASSY, FRONT PIVOT TONGUE - T/B NOVA
8	4	500165	PLATE, CLAMP 1/2 IN - U-CLAMP - NOVA - BLK
9	2	500166	PLATE, SHIM 1/2 IN - U-CLAMP - NOVA - BLK
10	1	503495	BDL, HOSE HOLDER - FRT HITCH - T/B NOVA - BLK
11	1	503310	BDL, REAR HITCH - T/B NOVA
12	1	503360	BDL, HITCH JACK - T/B NOVA
13	80	250452	NUT, HEX - 7/8 UNC PL
14	80	250553	WASHER, FLAT 7/8IN GR8 PL
15	12	250044	BOLT, HEX 7/8 X 3 IN UNC GR5 PL
16	64	250006	BOLT, HEX 7/8 X 2 1/4 UNC GR5 PL
17	4	250008	BOLT, HEX 7/8 X 4 UNC GR5 PL
18	1	503259	BDL, ZONE COMMAND - COMPRESSED AIR SYSTEM MNT

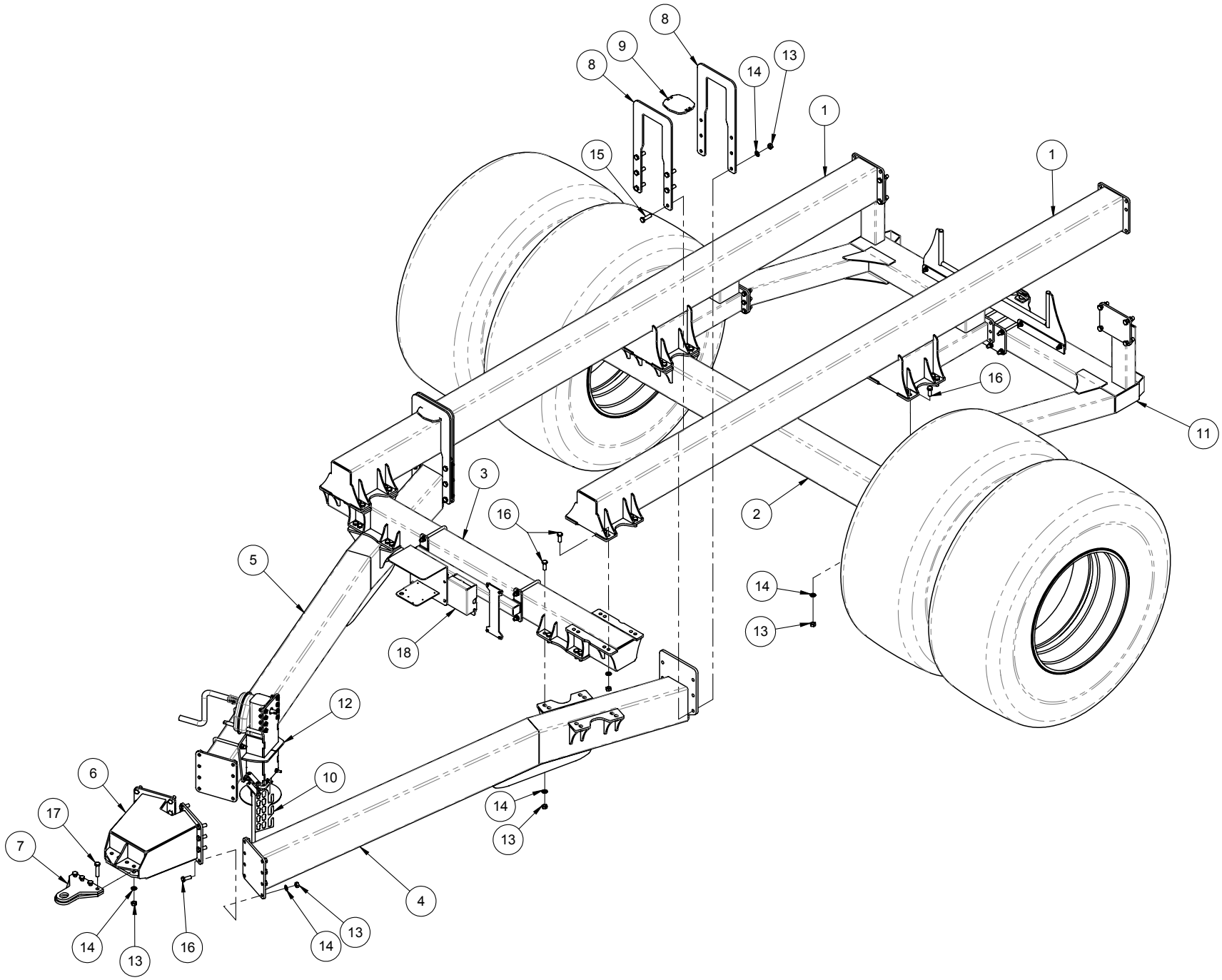
8
9
8
14
13
1
15
1
16
11
3
16
2
5
14
13
18
12
6
10
17
14
13
7
4
14
13
16
14
13

Parts Description:

Axle - Dual 710/70R38

Part No. 500140

ITEM	QTY.	PART NO.	DESCRIPTION
1	2	252005	ASSY, HUB/SPINDLE - H1030 - 6 IN STRAIGHT SPINDLE
2	4	255086	ASSY, TIRE - 710/70R38 - 166A8 R1W - DUAL RIM
3	1	500130	ASSY, REAR AXLE - NOVA - BLK
4	2	250075	BOLT, HEX 1 X 9 UNC GR5 PL
5	2	250554	WASHER, FLAT - 1 IN GR8 PL
6	2	250505	NUT, LOCK - 1 UNC - STOVER - PL
7	20	253041	NUT, WHEEL - 7/8 UNF FLANGE

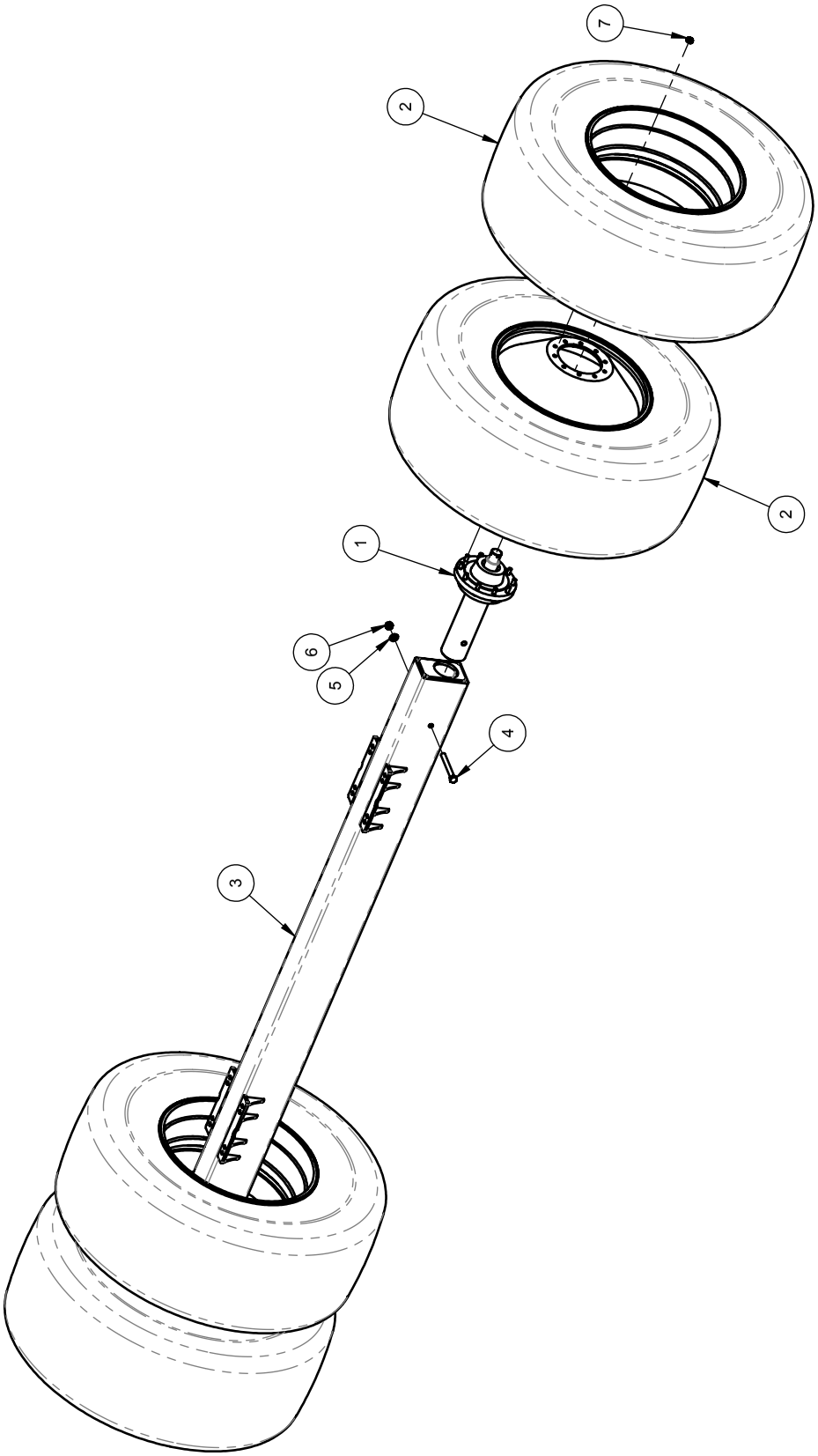
7
2
2
1
6
5
4
3

Parts Description:

Axle - Single 800/65R32

Part No. 500141

ITEM	QTY.	PART NO.	DESCRIPTION
1	2	255084	ASSY,TIRE-30.5/32-RAD.-173A8-BL RIM-H1020 HUB
2	2	252004	ASSY, HUB/SPINDLE-H1020-4 1/2IN STRAIGHT SPINDLE
3	1	501530	ASSY, REAR AXLE - NOVA - 520 BU - BLK
4	2	250075	BOLT, HEX 1 X 9 UNC GR5 PL
5	2	250505	NUT, LOCK - 1 UNC - STOVER - PL
6	2	250554	WASHER, FLAT - 1 IN GR8 PL
7	20	253036	NUT, WHEEL - 3/4 UNF FLANGE

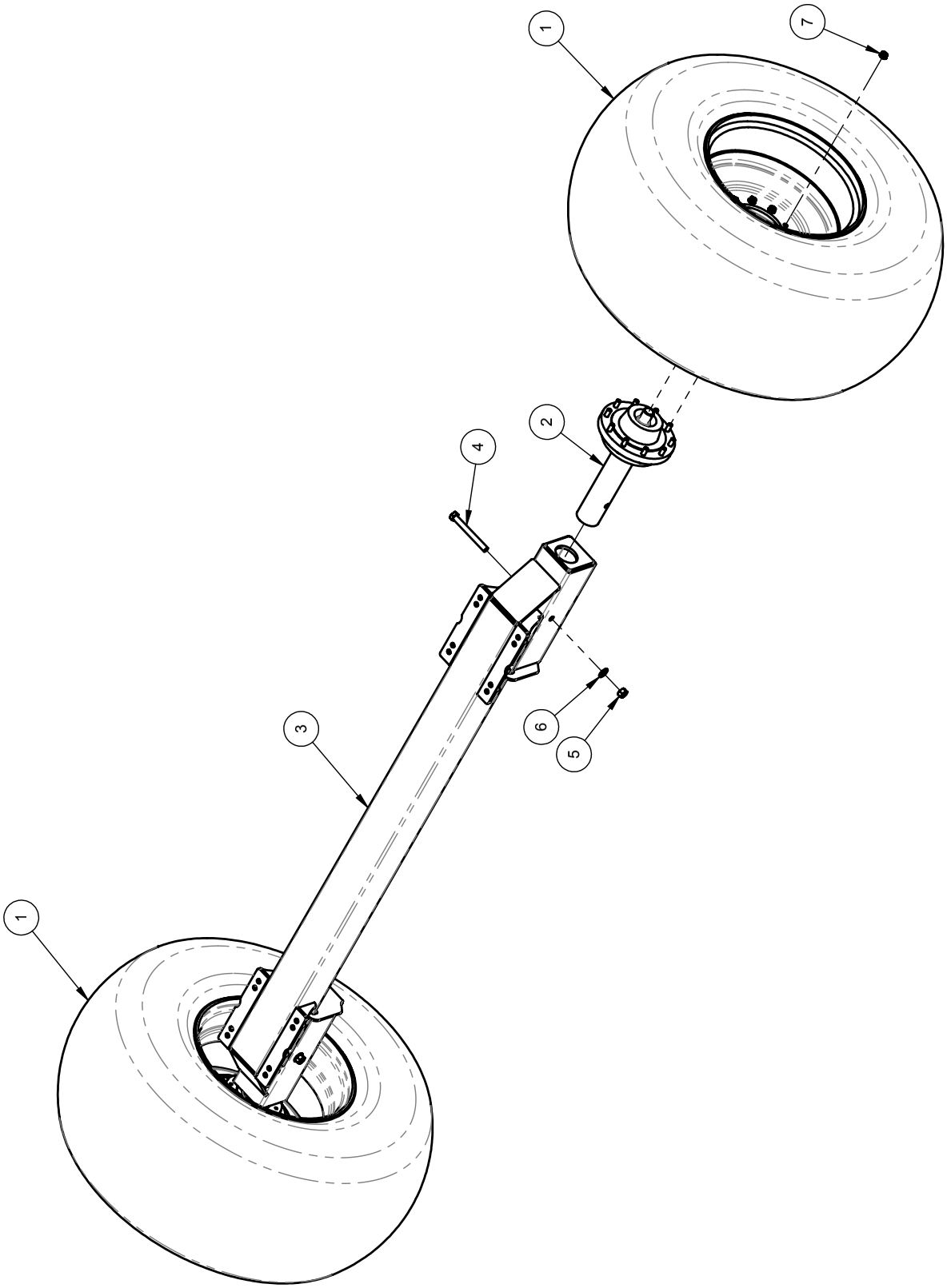
1
7
2
4
3
6
5
1

Parts Description:

Tank Cradle/Load Cells

Part No. 500350

ITEM	QTY.	PART NO.	DESCRIPTION
1	4	500370-2	ASSY, LOAD CELL MOUNT - TANK CRADLE - NOVA - BLK
2	4	257250	DIGISTAR LOAD CELL
3	2	500355-2	ASSY, CRADLE SLOPE - NOVA - BLK
4	2	500365	ASSY, BEAM - SIDE - TANK CRADLE - NOVA - BLK
5	2	500368	PLATE, BOLT 1/2 IN - CONNECTING PLATE - NOVA - BLK
6	4	403848	PLATE, SPACER 3/4 IN - AIR CART CRADLE MOUNT
7	4	403849	BUSH, 1.500 OD X .75 ID X 3/4 IN
8	8	250231	BOLT, U-SQ - 3/4 UNC X 8 ID X 14 IN - 2 IN THD - GR8 PL
9	32	250047	BOLT, HEX 5/8 X 2 UNC GR5 PL
10	32	250455	NUT, HEX 5/8 UNC GR5 PL
11	32	250550	WASHER, FLAT 5/8 IN GR8 PL
12	36	250552	WASHER, FLAT 3/4IN GR8 PL
13	24	250451	NUT, HEX 3/4 UNC GR5 PL
14	8	250082	BOLT, HEX 3/4 X 3 3/4 UNC GR5 PL
15	4	250094	BOLT, HEX 3/4 X 4 UNF GR5 PL
16	1	500354	PLATE, FRMD - 10 GA, LINK BOX PANEL - NOVA LOAD CELLS
17	1	250658	SCREW, SELF THREAD - 1/4 X 1 IN
18	1	408806	SHEET, FRMD 10 GA - AIR FILTER MOUNT PLATE - ZONE

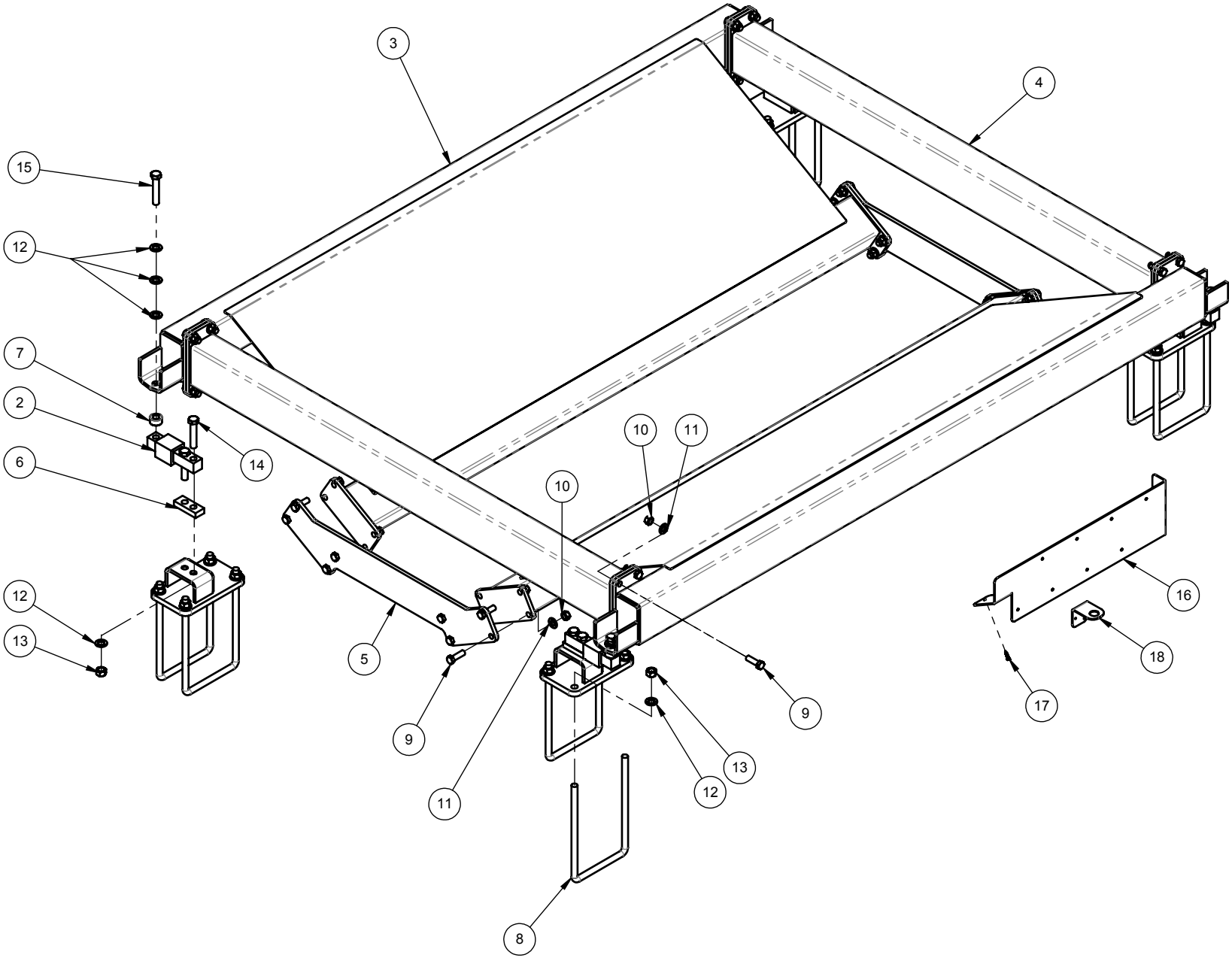
3
4
15
12
7
2
6
14
10
11
10
12
13
5
9
11
8
9
13
12
16
18
17

Parts Description:

Hitch Jack

Part No. 500205

ITEM	QTY.	PART NO.	DESCRIPTION
1	1	254506	JACK, HITCH - NOVA
2	2	250232	BOLT, U-SQ - 3/4 UNC X 12 ID X 10 IN - 2 IN THD - GR8 PL
3	4	250552	WASHER, FLAT 3/4IN GR8 PL
4	4	250451	NUT, HEX 3/4 UNC GR5 PL
5	16	250550	WASHER, FLAT 5/8 IN GR8 PL
6	8	250455	NUT, HEX 5/8 UNC GR5 PL
7	8	250047	BOLT, HEX 5/8 X 2 UNC GR5 PL
8	1	250200	BOLT, U-SQ - 1/2 UNC X 4 ID X 8 IN - 2 IN THD - GR5 PL
9	2	250555	WASHER, FLAT - 1/2 IN - GR8 - PL
10	2	250450	NUT, HEX 1/2 UNC GR5 PL
11	1	500200-2	ASSY, HITCH JACK MNT - NOVA - BLK
12	1	254507	HANDLE, LANDING JACK - NOVA
13	1	250077	BOLT, HEX 3/8 X 2 1/2 IN GR5 PL
14	1	250503	NUT, LOCK - 3/8 UNC - STOVER - PL
15	2	250557	WASHER, FLAT - 3/8 IN GR8 PL

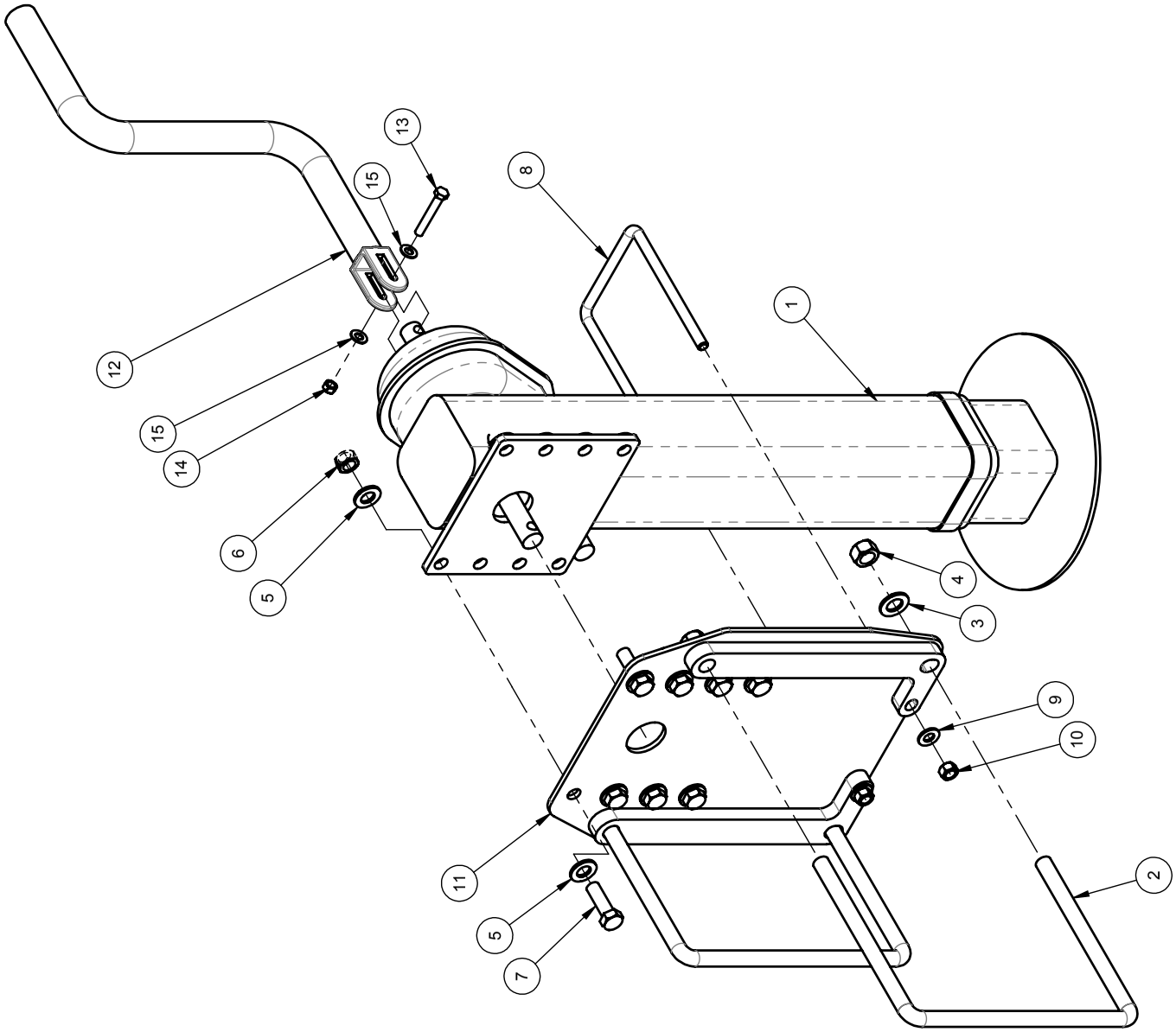
12
15
14
6
5
13
15
8
1
4
3
9
10
11
5
7
2

Parts Description:

Hitch Jack – T/B Nova

Part No. 503360

ITEM	QTY.	PART NO.	DESCRIPTION
1	1	254506	JACK, HITCH - NOVA
2	2	250232	BOLT, U-SQ - 3/4 UNC X 12 ID X 10 IN - 2 IN THD - GR8 PL
3	4	250552	WASHER, FLAT 3/4IN GR8 PL
4	4	250451	NUT, HEX 3/4 UNC GR5 PL
5	16	250550	WASHER, FLAT 5/8 IN GR8 PL
6	8	250455	NUT, HEX 5/8 UNC GR5 PL
7	8	250047	BOLT, HEX 5/8 X 2 UNC GR5 PL
8	1	250200	BOLT, U-SQ - 1/2 UNC X 4 ID X 8 IN - 2 IN THD - GR5 PL
9	2	250555	WASHER, FLAT - 1/2 IN - GR8 - PL
10	2	250450	NUT, HEX 1/2 UNC GR5 PL
11	1	250077	BOLT, HEX 3/8 X 2 1/2 IN GR5 PL
12	1	250503	NUT, LOCK - 3/8 UNC - STOVER - PL
13	2	250557	WASHER, FLAT - 3/8 IN GR8 PL
14	1	503365	ASSY, JACK MNT - T/B NOVA - BLK
15	1	254507	HANDLE, LANDING JACK - NOVA

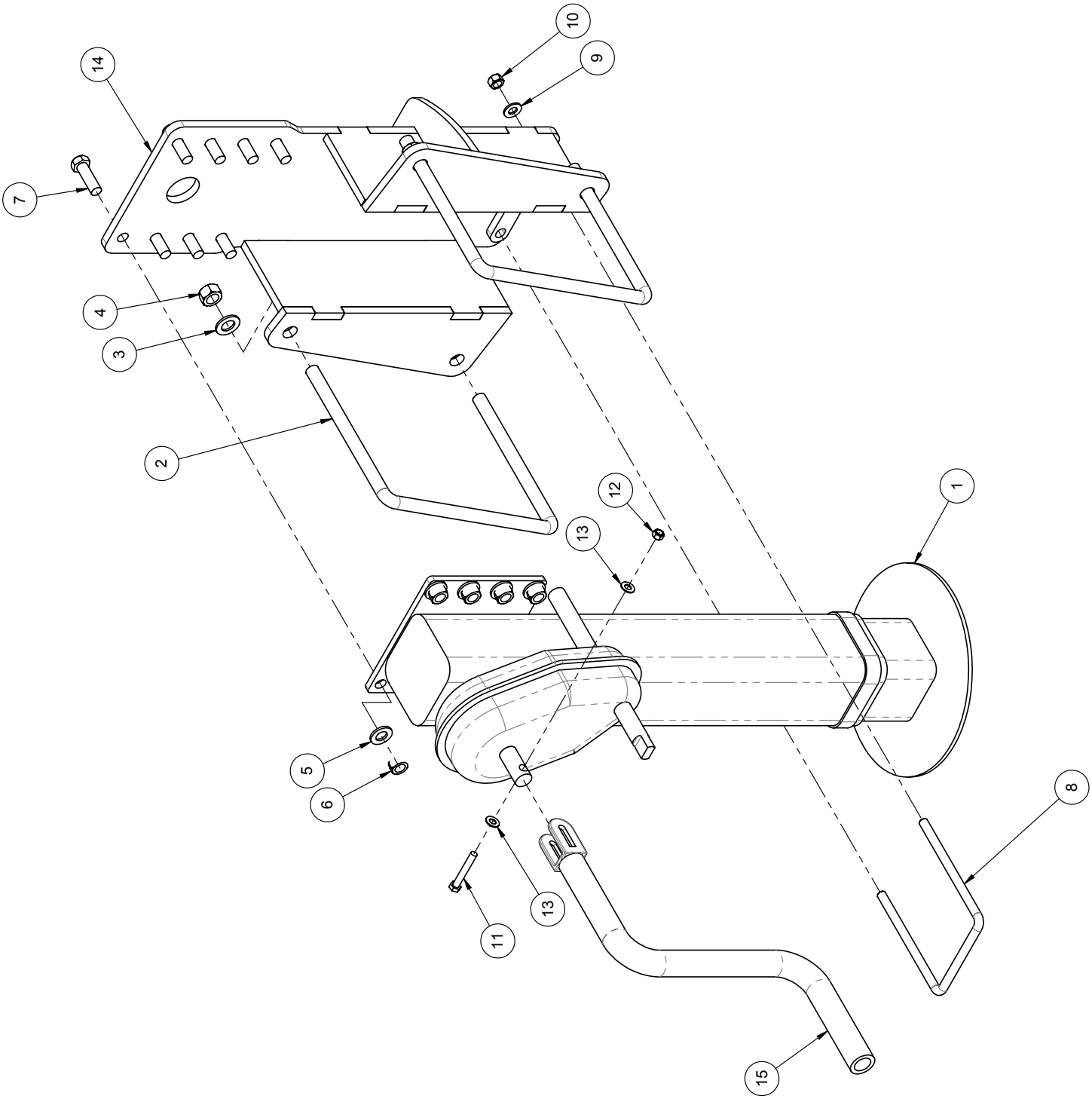
1
2
3
4
5
6
7
8
9
10
11
12
13
13
14
15

Parts Description:

Hitch Hose Holder

Part No. 500230

ITEM	QTY.	PART NO.	DESCRIPTION
1	1	500231	ASSY, HOSE HOLDER - FRONT HITCH - NOVA - BLK
2	1	500235	PLATE, FRMD 10GA - HOSE HOLDER TOP - FRT HITCH - NOVA - BLK
3	1	250234	BOLT, U-SQ - 1/2 UNC X 12 ID X 8 IN - 2 IN THD - GR5 PL
4	2	250555	WASHER, FLAT - 1/2 IN - GR8 - PL
5	2	250450	NUT, HEX 1/2 UNC GR5 PL
6	2	250101	BOLT, CARRIAGE - 3/8 X 1 1/4 IN UNC GR5 PL
7	2	250400	NUT, FLANGE - 3/8 UNC PL

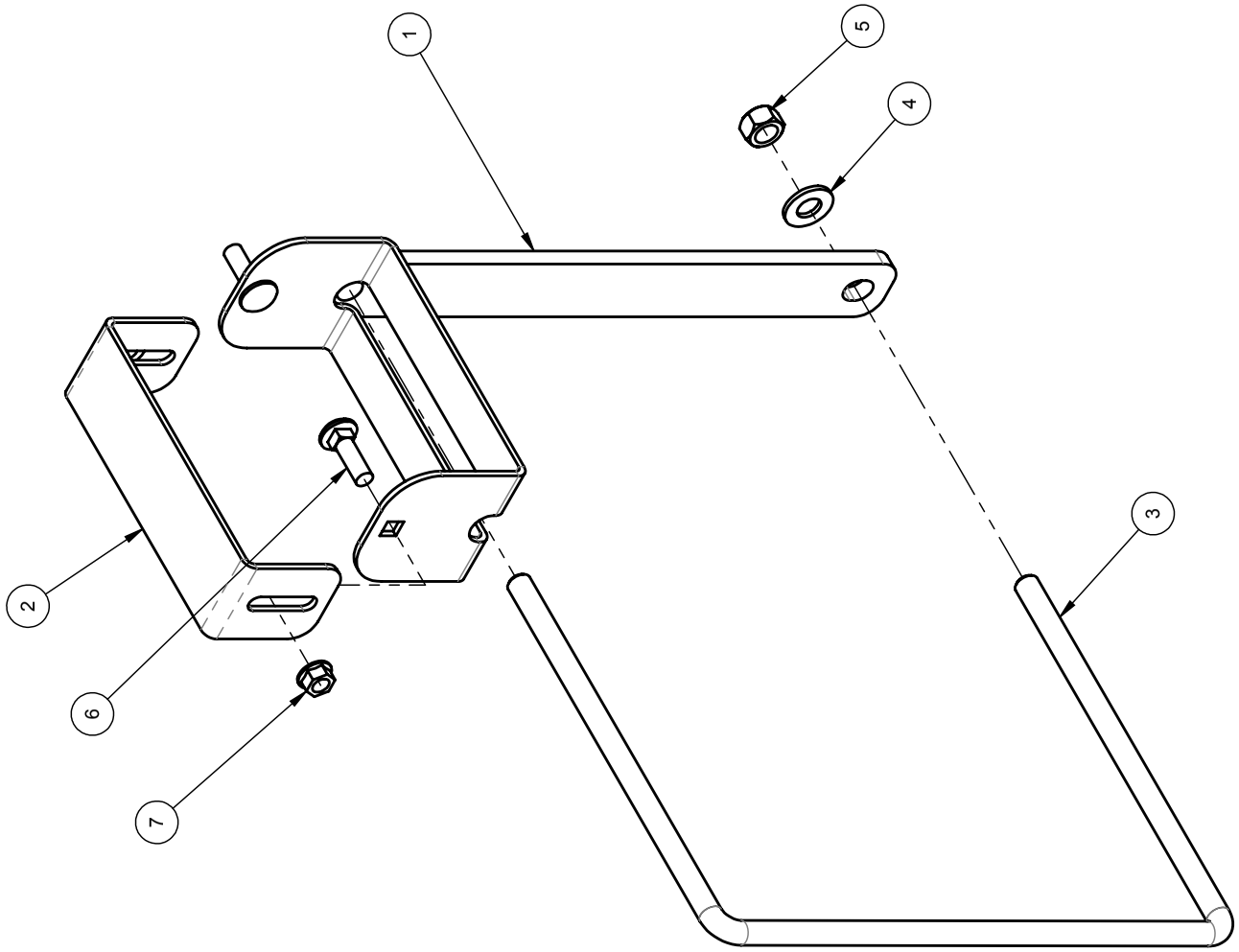
1
2
3
4
5
6
7

Parts Description:

Air/Elec Panel

Part No. 500330

ITEM	QTY.	PART NO.	DESCRIPTION
1	1	500335-1	ASSY, PANEL - AIR/ELEC CONTROL HOUSING - NOVA - YEL
2	1	500339-1	PLATE, FRMD 12GA - PANEL LID - NOVA - YEL
3	2	250507	NUT, LOCK - 1/4 UNC - STOVER - PL
4	2	250033	BOLT, HEX 1/4 X 1 IN GR5 PL
5	4	250552	WASHER, FLAT 3/4IN GR8 PL
6	4	250451	NUT, HEX 3/4 UNC GR5 PL
7	2	250220	BOLT, U-SQ - 3/4 UNC X 8 ID X 10 IN -2 IN THD - GR8 PL

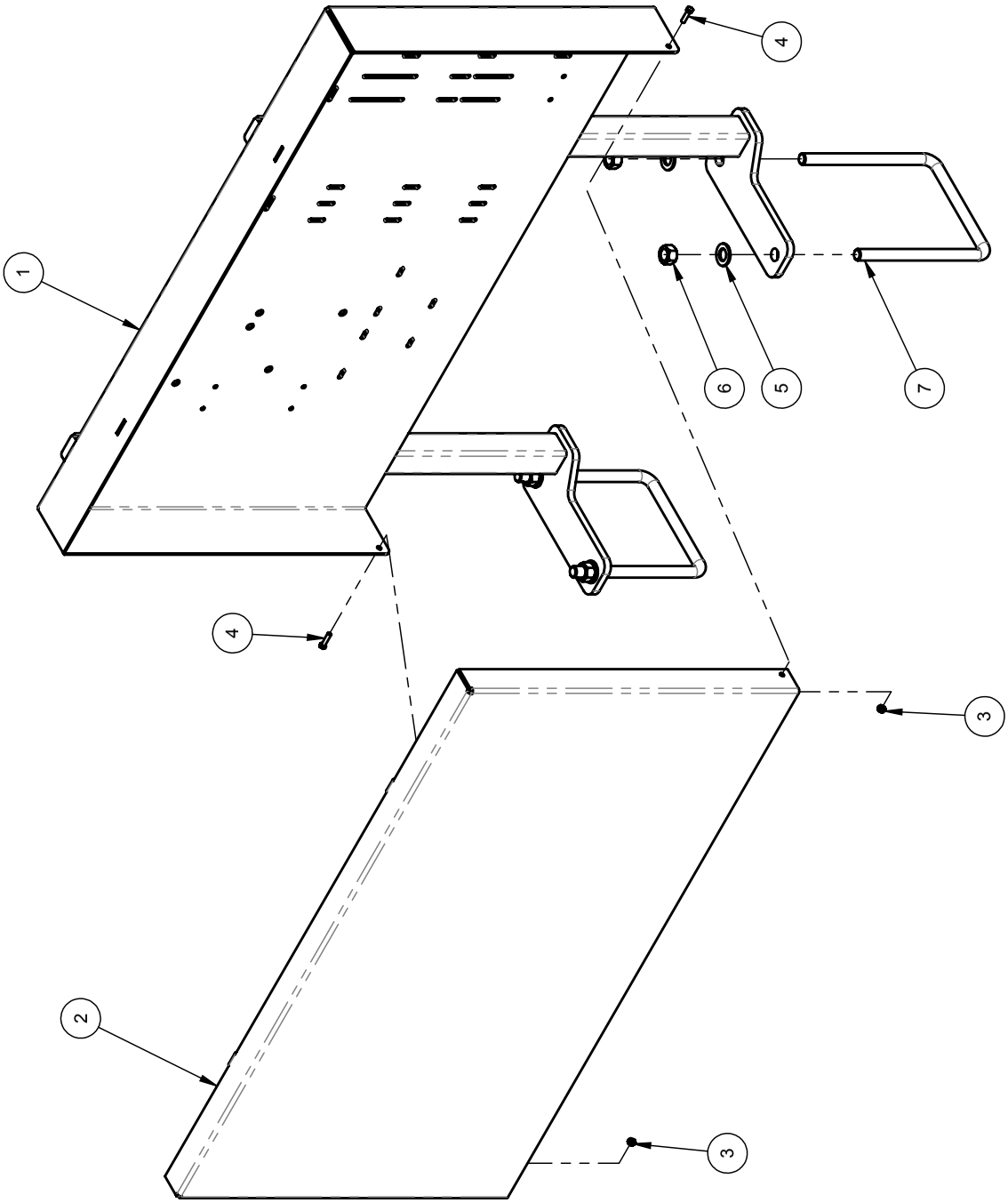
1
2
3
3
4
4
5
6
7

Parts Description:

Air/Elec Panel - T/B Nova

Part No. 502502

ITEM	QTY.	PART NO.	DESCRIPTION
1	1	502500-1	ASSY, FRONT CANOLA TANK PANEL MOUNT
2	1	408460-2	PLATE, FRMD - 10 GA - HYD/ELEC CONTROL HOUSIN
3	1	408455-2	PLATE, FRMD 12GA - HYD/ELEC HOUSING LID - SXX - YEL
4	2	250208	BOLT, U-SQ - 1/2 UNC X 4 ID X 5 IN - 2 IN THD - GR8 PL
5	8	250555	WASHER, FLAT - 1/2 IN - GR8 - PL
6	8	250450	NUT, HEX 1/2 UNC GR5 PL
7	4	250001	BOLT, HEX 1/2 X 1 1/2 IN GR5 PL
8	1	250033	BOLT, HEX 1/4 X 1 IN GR5 PL
9	1	250507	NUT, LOCK - 1/4 UNC - STOVER - PL

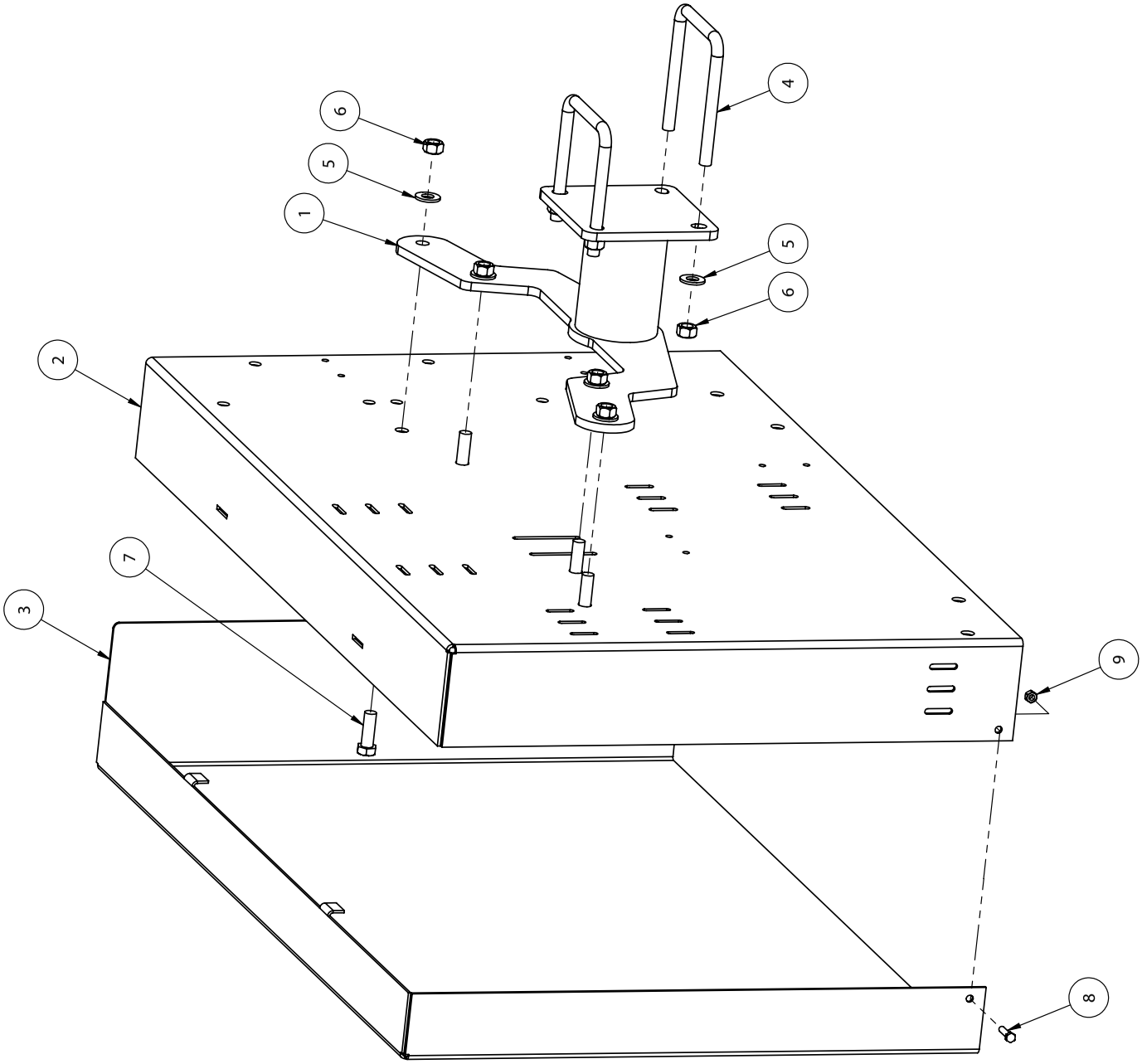
1
2
3
4
5
6
7
8
9

Parts Description:

Clearance Lights

Part No. 500315-1

ITEM	QTY.	PART NO.	DESCRIPTION
1	1	500310-1	ASSY, ADJUSTABLE MNT - CLEARANCE LIGHT - NOVA - BLK
2	1	500306-2	ASSY, MOUNT ARM - CLEARANCE LIGHT - NOVA - BLK
3	1	401520-2	ASSY, MARKER LIGHTS
4	2	250013	BOLT, HEX 1/2 X 1 1/4 IN GR5 PL
5	2	250213	BOLT, U-SQ - 1/2 UNC X 4 ID X 5 IN - 2 IN THD - GR8 PL
6	4	250555	WASHER, FLAT - 1/2 IN - GR8 - PL
7	4	250450	NUT, HEX 1/2 UNC GR5 PL

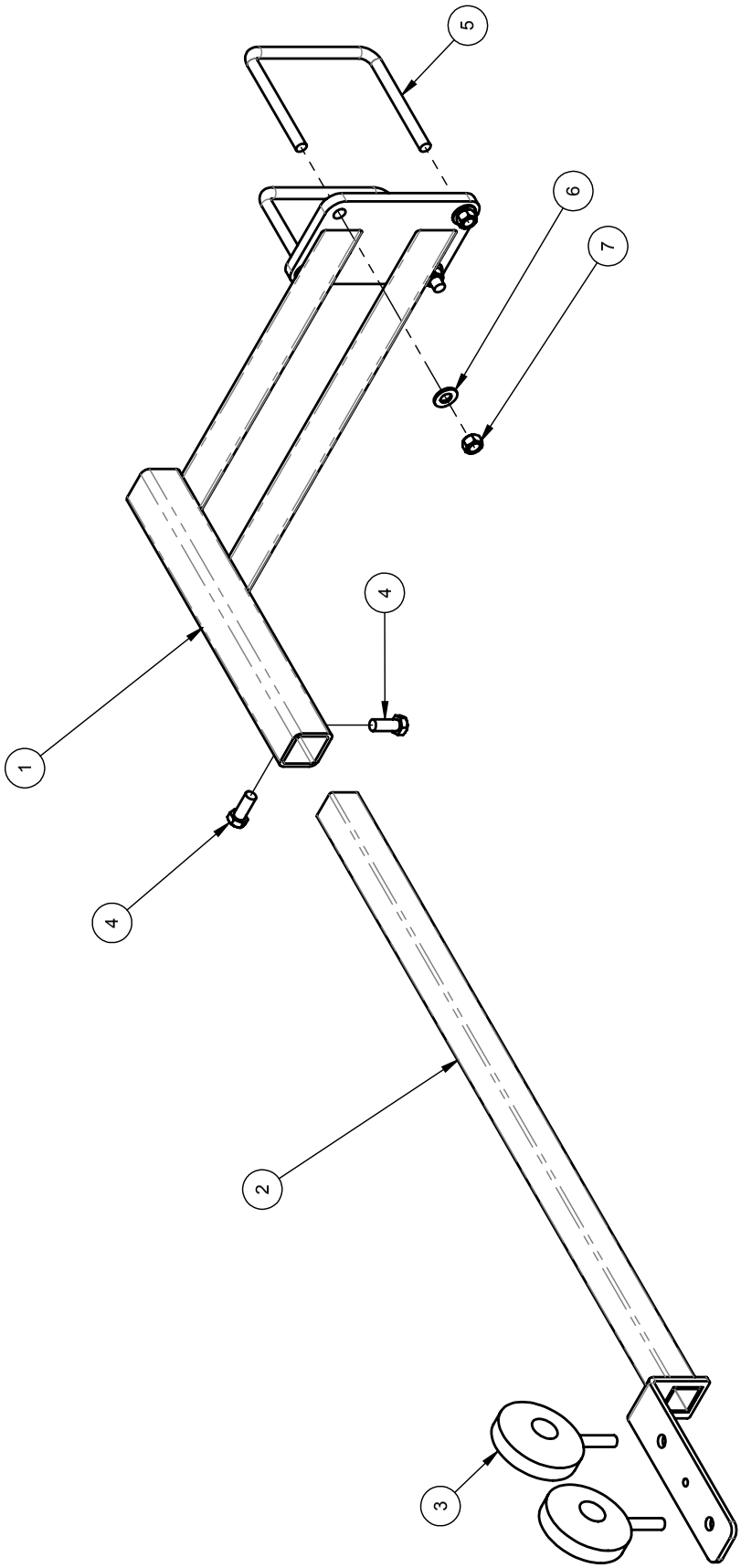
5
6
7
4
1
4
2
3

Parts Description:

2½” Delivery Hose Hitch Disconnect

Part No. 501645 – Dual Shoot
501647 – Single Shoot

501645

ITEM	QTY.	PART NO.	DESCRIPTION
1	1	501650-1	ASSY - DUAL SHOOT MOUNT - QUICK HOSE DISCONNECT - NOVA - BLK
2	10	501655	ASSY, DUAL SHOOT COUPLER - QUICK HOSE DISCONNECT - NOVA - BLK
3	10	250019	BOLT, HEX 3/8 X 1 1/4 IN GR5 PL
4	10	250557	WASHER, FLAT - 3/8 IN GR8 PL
5	10	250400	NUT, FLANGE - 3/8 UNC PL
6	1	250223	BOLT, U-SQ - 3/4 UNC X 4 ID X 6 IN - 2 IN THD - GR5 PL
7	10	250466	NUT, JAM - 3/8 UNC
8	8	250555	WASHER, FLAT - 1/2 IN - GR8 - PL
9	8	250450	NUT, HEX 1/2 UNC GR5 PL
10	2	250233	BOLT, U-SQ - 1/2 UNC X 12 ID X 8 IN - 2 IN THD - GR5 PL
11	20	250830	GASKET, FOAM - 2 1/2 IN ID X 3 1/4 IN OD X 3/8 IN THICK

501647

ITEM	QTY.	PART NO.	DESCRIPTION
1	1	501660-1	ASSY, SINGLE SHOOT MOUNT - QUICK HOSE DISCONNECT - NOVA - BLK
2	10	501665	ASSY, SINGLE SHOOT COUPLER - QUICK HOSE DISCONNECT - NOVA - BLK
3	10	250019	BOLT, HEX 3/8 X 1 1/4 IN GR5 PL
4	10	250557	WASHER, FLAT - 3/8 IN GR8 PL
5	10	250400	NUT, FLANGE - 3/8 UNC PL
6	1	250223	BOLT, U-SQ - 3/4 UNC X 4 ID X 6 IN - 2 IN THD - GR5 PL
7	10	250466	NUT, JAM - 3/8 UNC
8	8	250555	WASHER, FLAT - 1/2 IN - GR8 - PL
9	8	250450	NUT, HEX 1/2 UNC GR5 PL
10	2	250233	BOLT, U-SQ - 1/2 UNC X 12 ID X 8 IN - 2 IN THD - GR5 PL
11	10	250830	GASKET, FOAM - 2 1/2 IN ID X 3 1/4 IN OD X 3/8 IN THICK

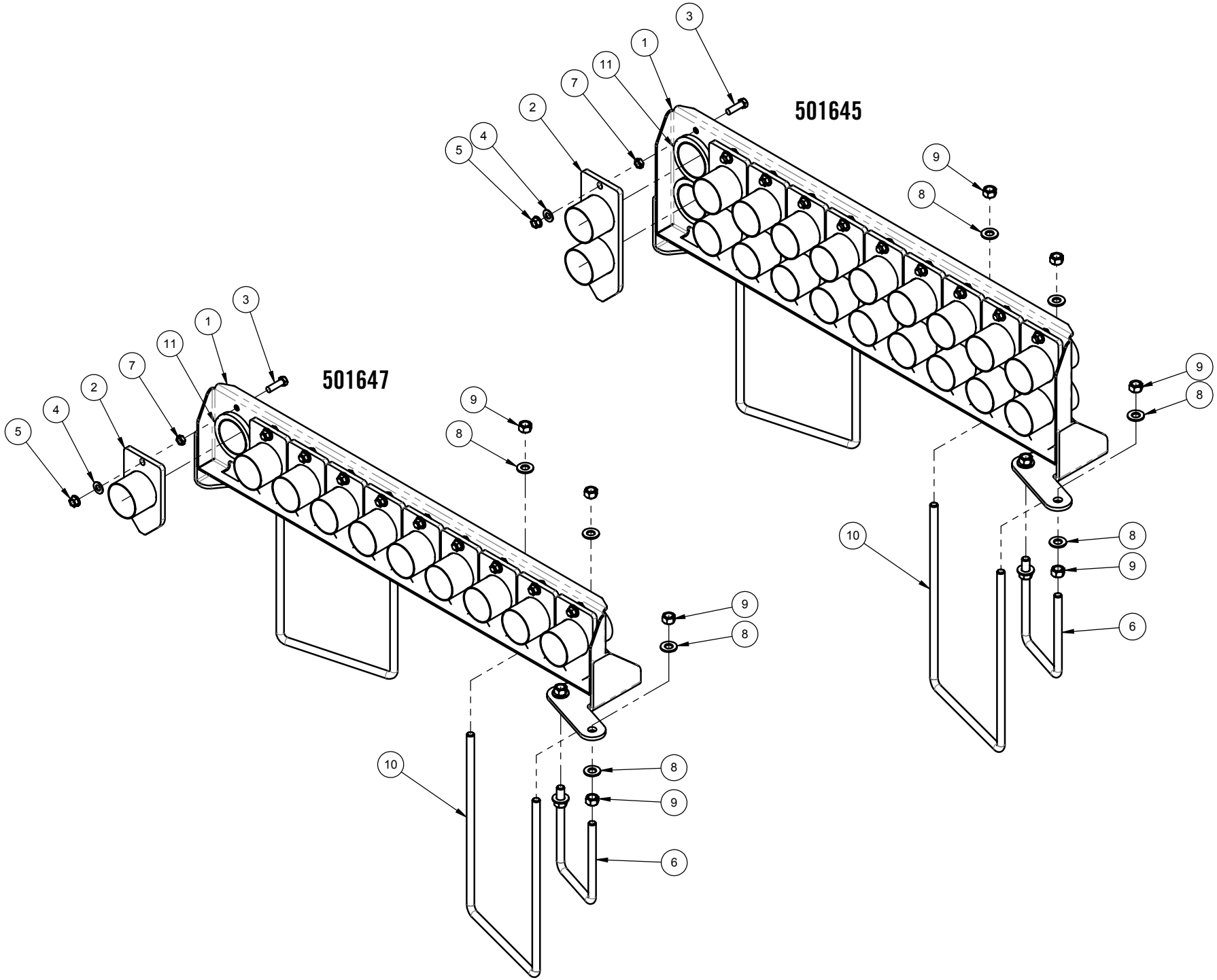
501645
501647
1
2
3
4
5
6
7
8
9
10
11

Parts Description:

2½” Delivery Hose Hitch Disconnect – T/B Nova

Part No. 503460 – Dual Shoot
503500 – Single Shoot

503460

ITEM	QTY.	PART NO.	DESCRIPTION
1	1	503475	ASSY, DELIVERY PIPE HOLDER - DUAL SHOOT - T/B NOVA - BLK
2	1	503470	ASSY, DELIVERY PIPE HOLDER - DUAL SHOOT - T/B NOVA - BLK
3	10	503478	TUBE, ERW - 2 1/2 OD X 16 GA X 120" - STR - BLK
4	10	250830	GASKET, FOAM - 2 1/2 IN ID X 3 1/4 IN OD X 3/8 IN THICK
5	5	501655	ASSY, DUAL SHOOT COUPLER - QUICK HOSE DISCONNECT - NOVA - BLK
6	5	250019	BOLT, HEX 3/8 X 1 1/4 IN GR5 PL
7	5	250466	NUT, JAM - 3/8 UNC
8	5	250557	WASHER, FLAT - 3/8 IN GR8 PL
9	5	250453	NUT, HEX - 3/8 UNC PL
10	4	250223	BOLT, U-SQ - 3/4 UNC X 4 ID X 6 IN - 2 IN THD - GR5 PL
11	8	250450	NUT, HEX 1/2 UNC GR5 PL
12	8	250555	WASHER, FLAT - 1/2 IN - GR8 - PL

503500

ITEM	QTY.	PART NO.	DESCRIPTION
1	1	503510	ASSY, DELIVERY PIPE HOLDER - SINGLE SHOOT - T/B NOVA - BLK
2	1	503505	ASSY, DELIVERY PIPE HOLDER - SINGLE SHOOT - T/B NOVA
3	5	503478	TUBE, ERW - 2 1/2 OD X 16 GA X 120" - STR - BLK
4	5	250830	GASKET, FOAM - 2 1/2 IN ID X 3 1/4 IN OD X 3/8 IN THICK
5	2	501655	ASSY, DUAL SHOOT COUPLER - QUICK HOSE DISCONNECT - NOVA - BLK
6	1	501665	ASSY, SINGLE SHOOT COUPLER - QUICK HOSE DISCONNECT - NOVA - BLK
7	3	250019	BOLT, HEX 3/8 X 1 1/4 IN GR5 PL
8	3	250466	NUT, JAM - 3/8 UNC
9	3	250557	WASHER, FLAT - 3/8 IN GR8 PL
10	3	250453	NUT, HEX - 3/8 UNC PL
11	4	250223	BOLT, U-SQ - 3/4 UNC X 4 ID X 6 IN - 2 IN THD - GR5 PL
12	8	250555	WASHER, FLAT - 1/2 IN - GR8 - PL
13	8	250450	NUT, HEX 1/2 UNC GR5 PL

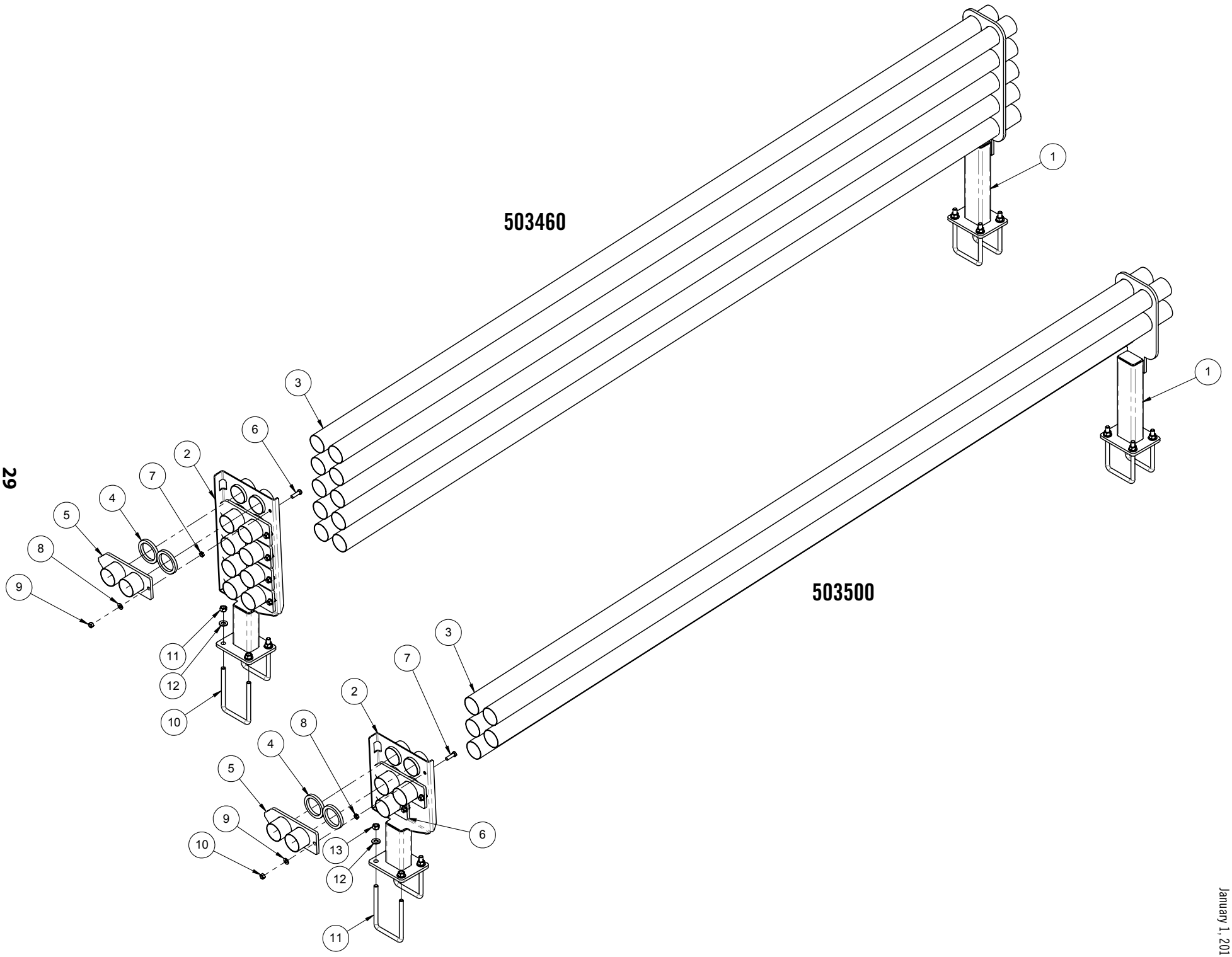
503460
503500
1
1
2
2
3
3
4
4
5
5
6
6
7
7
8
8
9
9
10
10
11
11
12
12
13

Parts Description:

Rear Hitch - 520/780 Nova

Part No. 501001

ITEM	QTY.	PART NO.	DESCRIPTION
1	1	501040	ASSY, REAR HITCH RH - 780BU NOVA - BLK
2	1	501035	ASSY, REAR HITCH LH - 780BU NOVA - BLK
3	1	501044	PLATE, BOLT 3/4 IN - 8 X 6 REAR HITCH
4	2	400488-1	PLATE, SPACER 3/4 IN - REAR HITCH
5	1	400489-1	PLATE, TOP 3/4 IN - REAR HITCH
6	4	250003	BOLT, HEX 3/4 X 2 1/2 UNC GR5 PL
7	4	250552	WASHER, FLAT 3/4IN GR8 PL
8	4	250501	NUT, LOCK - 3/4 UNC - STOVER - PL
9	1	250553	WASHER, FLAT 7/8IN GR8 PL
10	1	250502	NUT, LOCK - 3/4 UNC - STOVER - PL
11	1	250008	BOLT, HEX 7/8 X 4 UNC GR5 PL

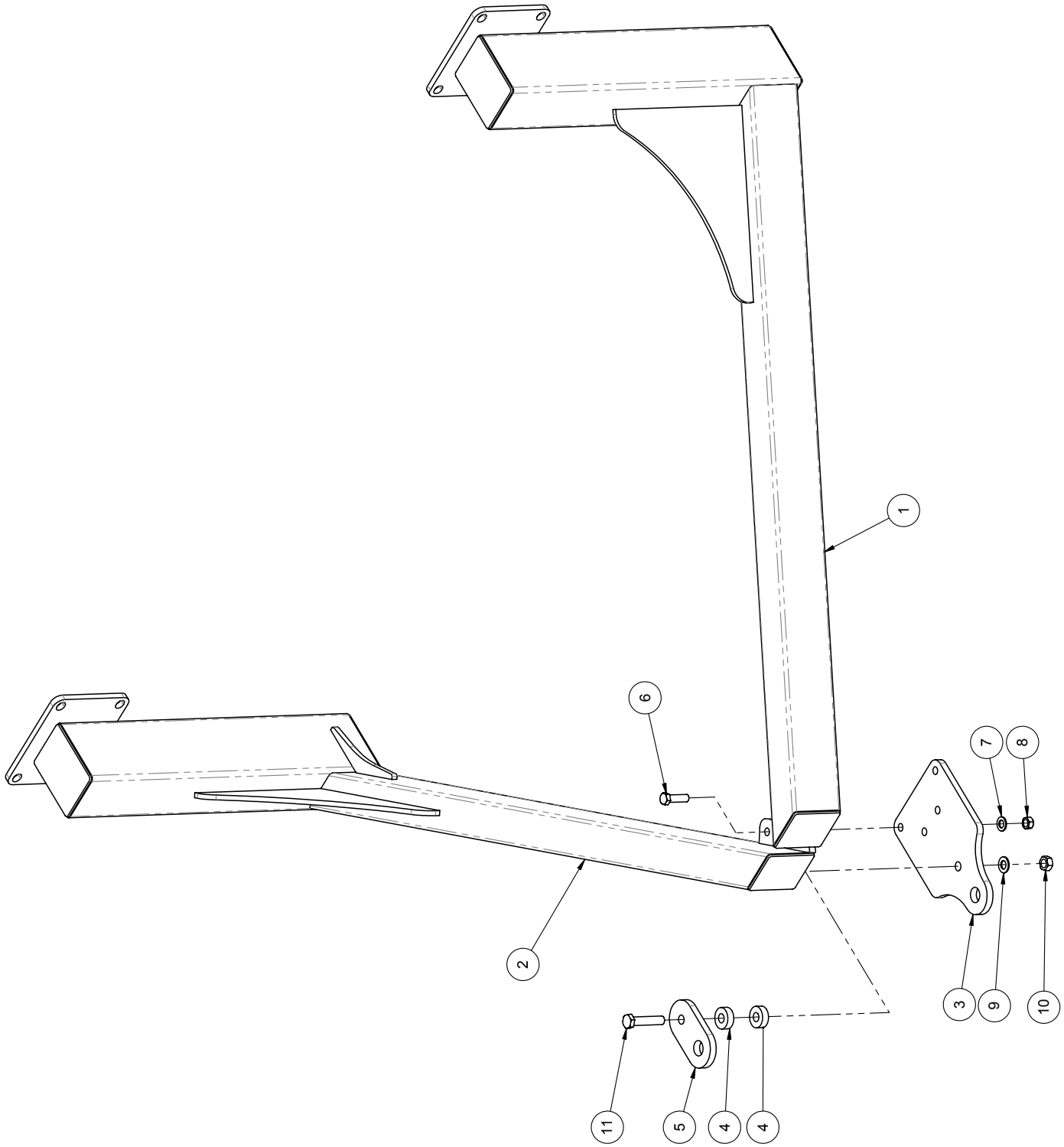
1
2
3
4
4
5
6
7
8
9
10
11

Parts Description:

Rear Hitch - 560/820 Nova

Part No. 501300

ITEM	QTY.	PART NO.	DESCRIPTION
1	1	501305	ASSY, FLOATING HITCH CROSS BRACE - NOVA
2	2	501310	ASSY, FLOATING REAR HITCH - 820 NOVA
3	1	501325	ASSY, FLOATING REAR HITCH - ANG. CROSS BEAM
4	1	501330	ASSY, FLOATING REAR HITCH TONGUE
5	2	501340	PLATE, GUIDE 5/8 IN - NOVA REAR FLOATING HITCH
6	2	501341-1	PLATE, FRMD 3/8 IN - FLOATING REAR HITCH GUIDE RET
7	8	250004	BOLT, HEX 3/4 X 2 3/4 UNC GR5 PL
8	24	250552	WASHER, FLAT 3/4IN GR8 PL
9	24	250451	NUT, HEX 3/4 UNC GR5 PL
10	8	250201	BOLT, U-SQ - 3/4 UNC X 4 ID X 6 IN - 2 IN THD - GR5 PL
11	2	250223	BOLT, U-SQ - 3/4 UNC X 4 ID X 6 IN - 2 IN THD - GR5 PL
12	4	250555	WASHER, FLAT - 1/2 IN - GR8 - PL
13	4	250450	NUT, HEX 1/2 UNC GR5 PL
14	2	250032	BOLT, HEX 1 X 4 IN UNC GR5 PL
15	4	250554	WASHER, FLAT - 1 IN GR8 PL
16	4	250457	NUT, HEX 1 UNC GR5 PL
17	2	250031	BOLT, HEX 1 X 3 1/2 IN GR5 PL

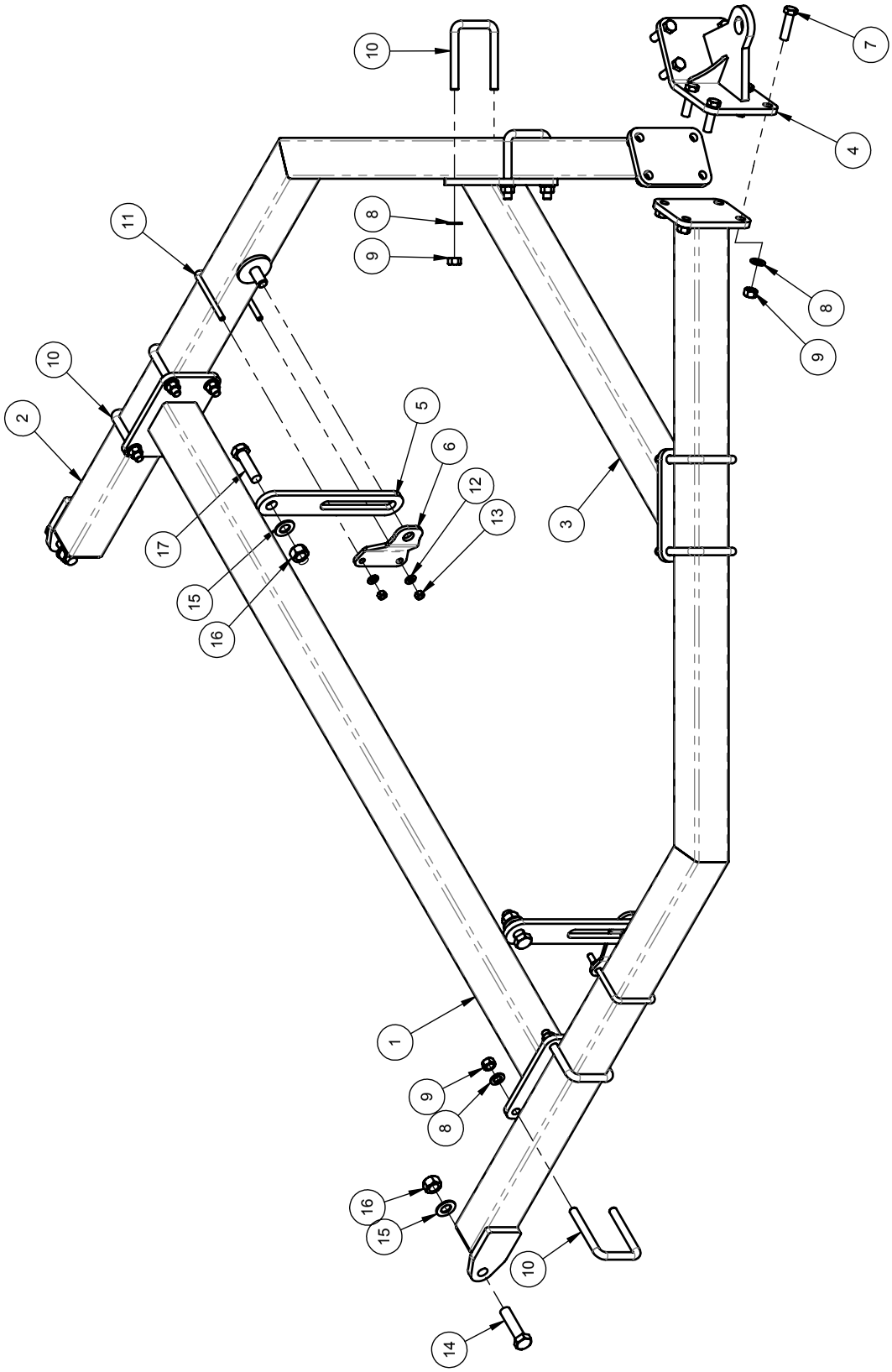
10
11
10
2
17
15
16
8
9
5
6
12
13
1
9
8
16
15
14
10
7
4
8
9
3

Parts Description:

Rear Hitch – 630 T/B Nova

Part No. 503310

ITEM	QTY.	PART NO.	DESCRIPTION
1	1	503320	ASSY, REAR HITCH - T/B NOVA - BLK
2	1	503335	ASSY, REAR CLEVIS - T/B NOVA - BLK
3	1	503340	ASSY, CLAMP PLATE - REAR CLEVIS - T/B NOVA - BLK
4	1	503345	ASS, DELIVERY HOSE GUIDE - T/B NOVA - BLK
5	10	250112	BOLT, HEX 3/4 X 13 UNC GR5 PL
6	4	250550	WASHER, FLAT 5/8 IN GR8 PL
7	4	250047	BOLT, HEX 5/8 X 2 UNC GR5 PL
8	4	250455	NUT, HEX 5/8 UNC GR5 PL
9	8	250044	BOLT, HEX 7/8 X 3 IN UNC GR5 PL
10	8	250452	NUT, HEX - 7/8 UNC PL
11	8	250553	WASHER, FLAT 7/8IN GR8 PL
12	12	250004	BOLT, HEX 3/4 X 2 3/4 UNC GR5 PL
13	32	250552	WASHER, FLAT 3/4IN GR8 PL
14	22	250451	NUT, HEX 3/4 UNC GR5 PL
15	1	503315	ASSY, REAR HITCH PIN - T/B NOVA - BLK
16	1	250627	HAIRPIN, 1/4 X 5 IN - HITCH PIN

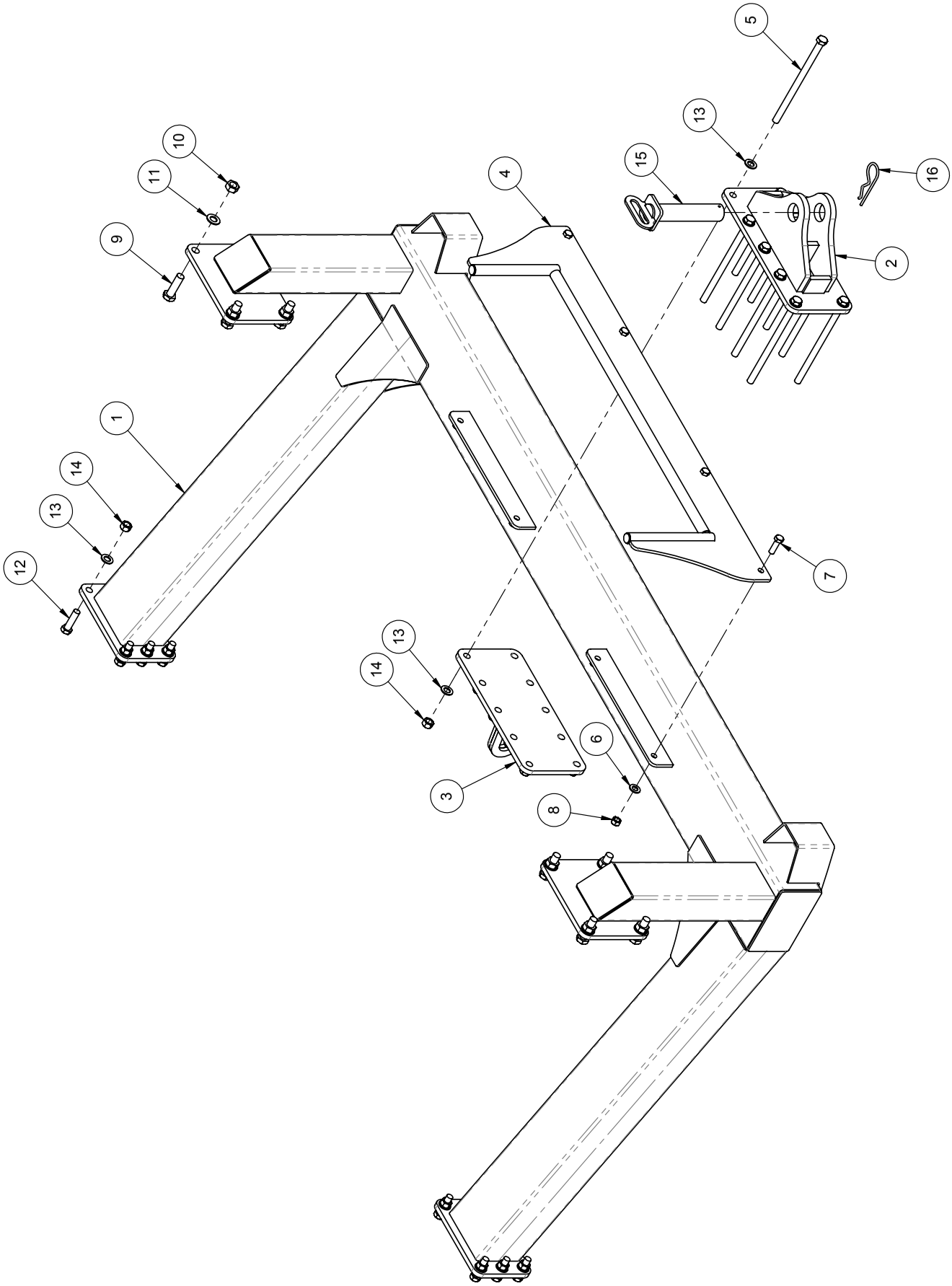
1
2
3
4
5
6
7
8
9
10
11
12
13
14
15
16

Parts Description:

Meter Box - Standard Tank

Part No. 500450-2

ITEM	QTY.	PART NO.	DESCRIPTION
1	1	500455-3	ASSY, METER HOUSING - S.S. - NOVA
2	1	500470-5	ASSY, ENGAGING ARM
3	1	500475-1	ROLLER, METER - NOVA - 70D - BLK
4	6	250618	BUSH, SHOULDER - PLASTIC - 1/2ID X 5/8OD - IGUS MFI-0
5	1	400965	BUSH, NYLON - 1 1/2OD X 7/16 ID X 2 3/8 IN
6	6	250109	BOLT, CARRIAGE - 3/8 X 1 1/4 IN UNC - STAINLESS
7	4	250464	NUT, HEX - 3/8 UNC GR5 JS500
8	6	250569	WASHER, FLAT - 3/8 IN SS
9	1	250072	BOLT, HEX 3/8 X 3 IN GR5 PL
10	1	250503	NUT, LOCK - 3/8 UNC - STOVER - PL
11	8	256579	CELLTITE SPONGE - 1/4 X 3/4 IN
12	1	260521	ELBOW, 90D - 1/8 NPT M X 1/4IN PUSH ON - AIR
13	2	500481	SHEET, 14GA - NOVA METER END CAP
14	6	250172	NUT, LOCK - 1/4 UNC 18.8 SS
15	1	250641-1	SHAFT, 5/8 HEX - NOVA METER ROLLER SHAFT
16	2	250642	HOUSING, NOVA METER BEARING SEAL - SS
17	2	500487	SHEET, BUSHING HOUSING CLAMP 10GA - STAINLESS
18	2	250643-1	BUSHING, NOVA METER 5/8 HEX - J4
19	6	250568	WASHER, FLAT - 1/4 IN - PL
20	1	500493	SHEET, 14GA - NOVA METER END CAP
21	2	250645	RETAINING RING, E-TYPE 5/8 IN - STAINLESS STEEL
22	2	250646	O-RING, 2-120 - HSN 90 DUROMETER
23	2	250647	O-RING, 2-130 - BUTYL - 70 DUROMETER
24	1	500484-1	SHEET, FRMD10 GA - CLEAN OUT - STAINLESS - NOVA
25	1	501890-1	ASSY, HUB - COMPLETE INTERMEDIATE - NOVA METER
26	1	501891-1	ASSY, HUB - COMPLETE ROLLER - NOVA METER
27	2	250555	WASHER, FLAT - 1/2 IN - GR8 - PL
28	1	250675-1	GEAR, IDLER - STEEL - NOVA METER
29	4	250649	RETAINING RING, E-TYPE 1/2 IN - STAINLESS STEEL
30	1	260508	CYL, AIR - 1 X 1 - PARKER - 1.06DPSRS X 1.00
31	1	260506	CLEVIS, ROD - AIR CYLINDER - IGUS GERI-05
32	1	260507	CLEVIS PIN, AIR CYLINDER - IGUS GEFM-08
33	1	250680	RETAINING RING, E-TYPE 1/4 IN - STAINLESS STEEL
34	2	500438	PLATE, 5/16 IN S.S. - ROLLER CLEANOUT
35	2	250169	BOLT, CARRIAGE - 1/4 X 3/4 UNC 18.8 S.S.
36	2	250531	NUT, WING - 3/8 UNC - STAINLESS

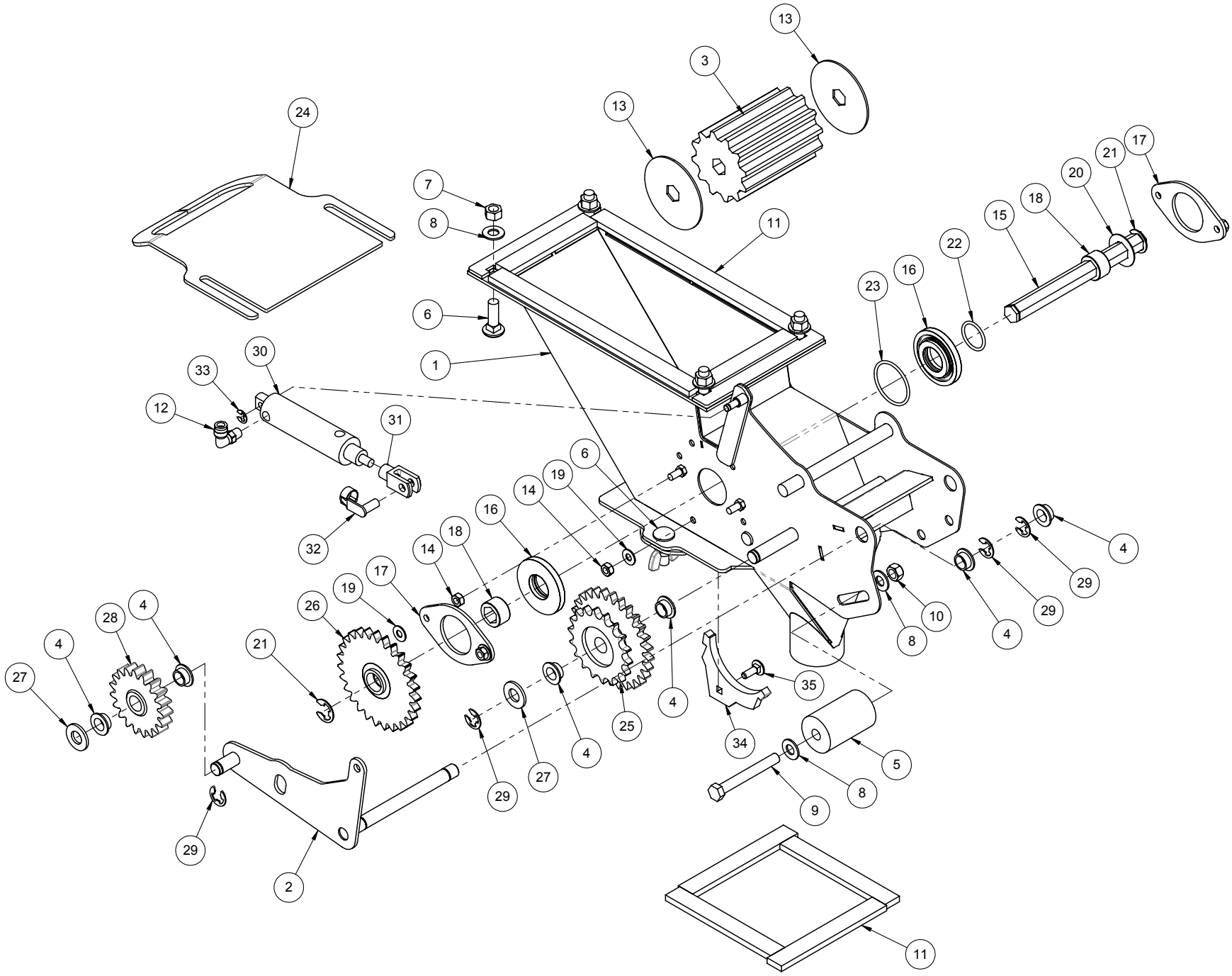
24
13
3
13
7
8
11
6
1
30
33
12
31
32
6
19
14
16
18
14
17
19
26
21
28
4
4
27
4
29
2
29
27
4
25
4
34
35
5
8
9
11
23
16
22
15
18
20
21
17
4
29
4
29
8
10

Parts Description:

Meter Box - Canola Tank

Part No. 500451-2

ITEM	QTY.	PART NO.	DESCRIPTION
1	1	500454-2	ASSY, CANOLA METER HOUSING - S.S. - NOVA
2	1	500470-5	ASSY, ENGAGING ARM
3	1	500499	ROLLER, METER - LOW RATE - NOVA - 75D - BLK
4	6	250618	BUSH, SHOULDER - PLASTIC - 1/2ID X 5/8OD - IGUS MFI-0
5	2	250531	NUT, WING - 3/8 UNC - STAINLESS
6	1	400965	BUSH, NYLON - 1 1/2OD X 7/16 ID X 2 3/8 IN
7	6	250109	BOLT, CARRIAGE - 3/8 X 1 1/4 IN UNC - STAINLESS
8	4	250464	NUT, HEX - 3/8 UNC GR5 JS500
9	6	250569	WASHER, FLAT - 3/8 IN SS
10	1	250072	BOLT, HEX 3/8 X 3 IN GR5 PL
11	1	250503	NUT, LOCK - 3/8 UNC - STOVER - PL
12	8	256579	CELLTITE SPONGE - 1/4 X 3/4 IN
13	1	260521	ELBOW, 90D - 1/8 NPT M X 1/4IN PUSH ON - AIR
14	2	500481	SHEET, 14GA - NOVA METER END CAP
15	6	250172	NUT, LOCK - 1/4 UNC 18.8 SS
16	1	250641-1	SHAFT, 5/8 HEX - NOVA METER ROLLER SHAFT
17	2	250642	HOUSING, NOVA METER BEARING SEAL - SS
18	2	500487	SHEET, BUSHING HOUSING CLAMP 10GA - STAINLESS
19	2	250643	BUSHING, NOVA METER 5/8 HEX - NYLATRON
20	6	250568	WASHER, FLAT - 1/4 IN - PL
21	1	500493	SHEET, 14GA - NOVA METER END CAP
22	2	250645	RETAINING RING, E-TYPE 5/8 IN - STAINLESS STEEL
23	2	250646	O-RING, 2-120 - HSN 90 DUROMETER
24	2	250647	O-RING, 2-130 - BUTYL - 70 DUROMETER
25	1	500484-1	SHEET, FRMD10 GA - CLEAN OUT - STAINLESS - NOVA
26	1	501890-1	ASSY, HUB - COMPLETE INTERMEDIATE - NOVA METER
27	1	501891-1	ASSY, HUB - COMPLETE ROLLER - NOVA METER
28	2	250555	WASHER, FLAT - 1/2 IN - GR8 - PL
29	1	250675-1	GEAR, IDLER - STEEL - NOVA METER
30	4	250649	RETAINING RING, E-TYPE 1/2 IN - STAINLESS STEEL
31	1	260508	CYL, AIR - 1 X 1 - PARKER - 1.06DPSRS X 1.00
32	1	260506	CLEVIS, ROD - AIR CYLINDER - IGUS GERI-05
33	1	260507	CLEVIS PIN, AIR CYLINDER - IGUS GEFM-08
34	1	250680	RETAINING RING, E-TYPE 1/4 IN - STAINLESS STEEL
35	2	500449	PLATE, 5/16 IN - ROLLER END CLEANOUT- CANOLA METE
36	2	250169	BOLT, CARRIAGE - 1/4 X 3/4 UNC 18.8 S.S.

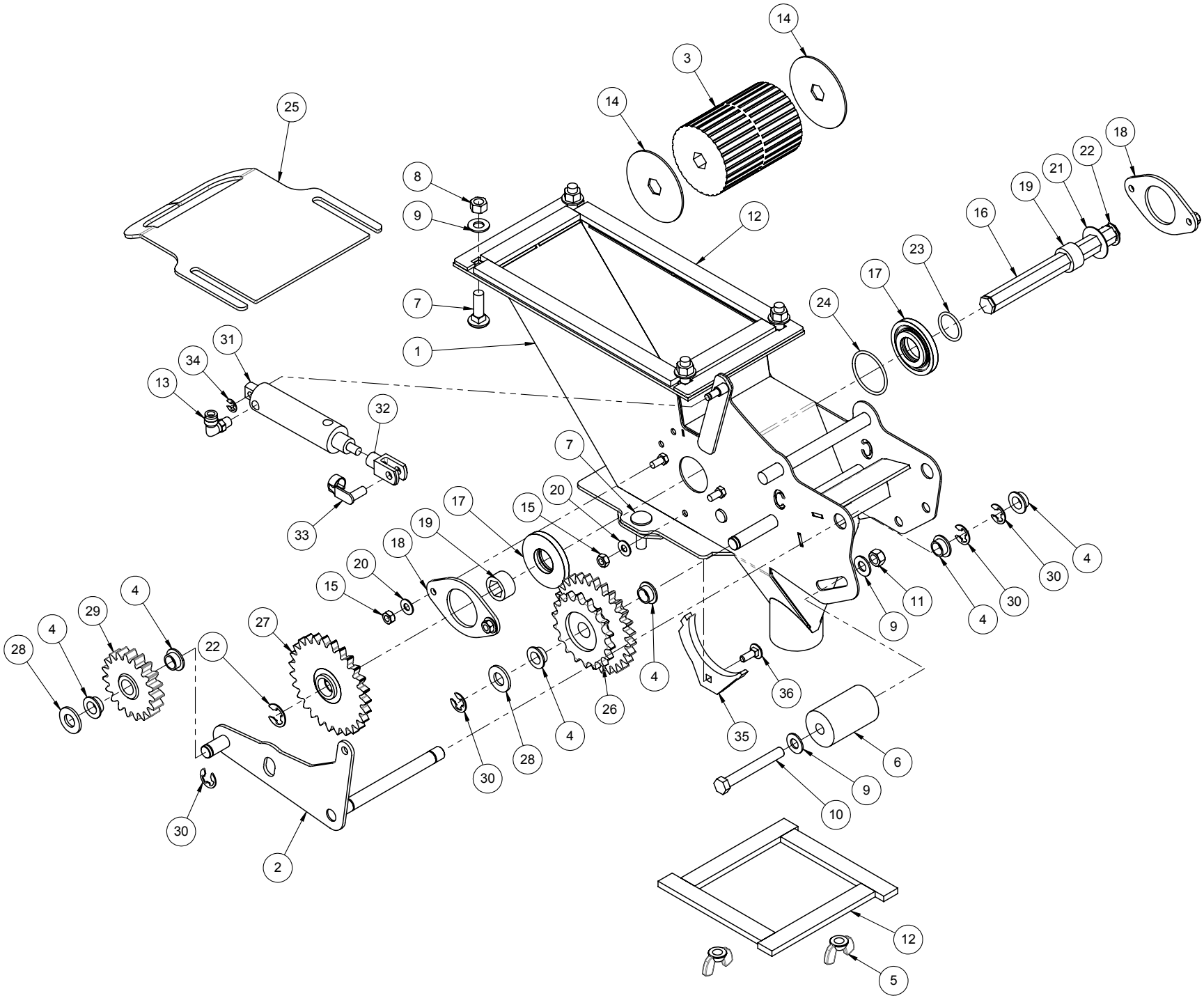
25
14
3
14
8
9
12
7
1
31
34
13
32
33
7
20
15
17
19
18
20
15
4
29
4
28
4
22
27
26
4
28
30
30
2
35
36
6
9
10
12
5
24
17
23
16
19
21
22
18
4
30
4
30
11
9

Parts Description:

Common Drive Shaft

Part No. 500452-2 – 10 Zone
500453-2 – 8 Zone

ITEM	QTY.	PART NO.	DESCRIPTION
1	2	250019	BOLT, HEX 3/8 X 1 1/4 IN GR5 PL
2	10	250036	BOLT, HEX 3/8 X 1 IN GR5 PL
3	14	250453	NUT, HEX - 3/8 UNC PL
4	14	250557	WASHER, FLAT - 3/8 IN GR8 PL
5	7	250708	5/8 HEX BEARING FLUSH MOUNT - LUTCO
6	1	500435	SFT, DRIVE - HEX - 5/8 X 81 3/4 - STAINLESS - 10 ZONE - NOVA
7	1	500480	RETAINER, HEX SHAFT - 5/8 HEX BORE - PLASTIC
8	10	500482	SHEET, BEARING HOLDER 10GA - STAINLESS
9	8	500483	SHEET, SPACER 10GA - BEARING HOLDER - STAINLESS
10	11	250630	SCREW, SET - 1/4 X 3/8 UNC
11	1	500410	ASSY, NOVA END METER BEARING PLATE
12	1	500494-2	ASSY, MOTOR MOUNT SUPPORT - STAINLESS - NOVA
13	10	501892-1	ASSY, HUB - COMPLETE COMMON DRIVE - NOVA METER
14	1	250122	BOLT, HEX 1/4 X 3/4 IN GR5 PL
15	1	250458	NUT, HEX - 1/4 UNC PL
16	2	250559	WASHER, FLAT - 1/4 IN - PL
17	1	500433	PLATE, 1/4IN - RAVEN MOTOR MNT - BLK
18	1	500432	PLATE, FRMD 1/4IN - RAVEN MOTOR MNT - BLK
19	1	260723	ADAPTER, HEX - 7/8-M X 5/8-F
20	1	260717	MOTOR, HYD - METER DRIVE - RAVEN 3/4 HEX DRIVE - 14168000001
21	1	250081	BOLT, HEX 1/4 X 1 3/4 IN - GR5 PL
22	1	250507	NUT, LOCK - 1/4 UNC - STOVER - PL
23	2	250077	BOLT, HEX 3/8 X 2 1/2 IN GR5 PL

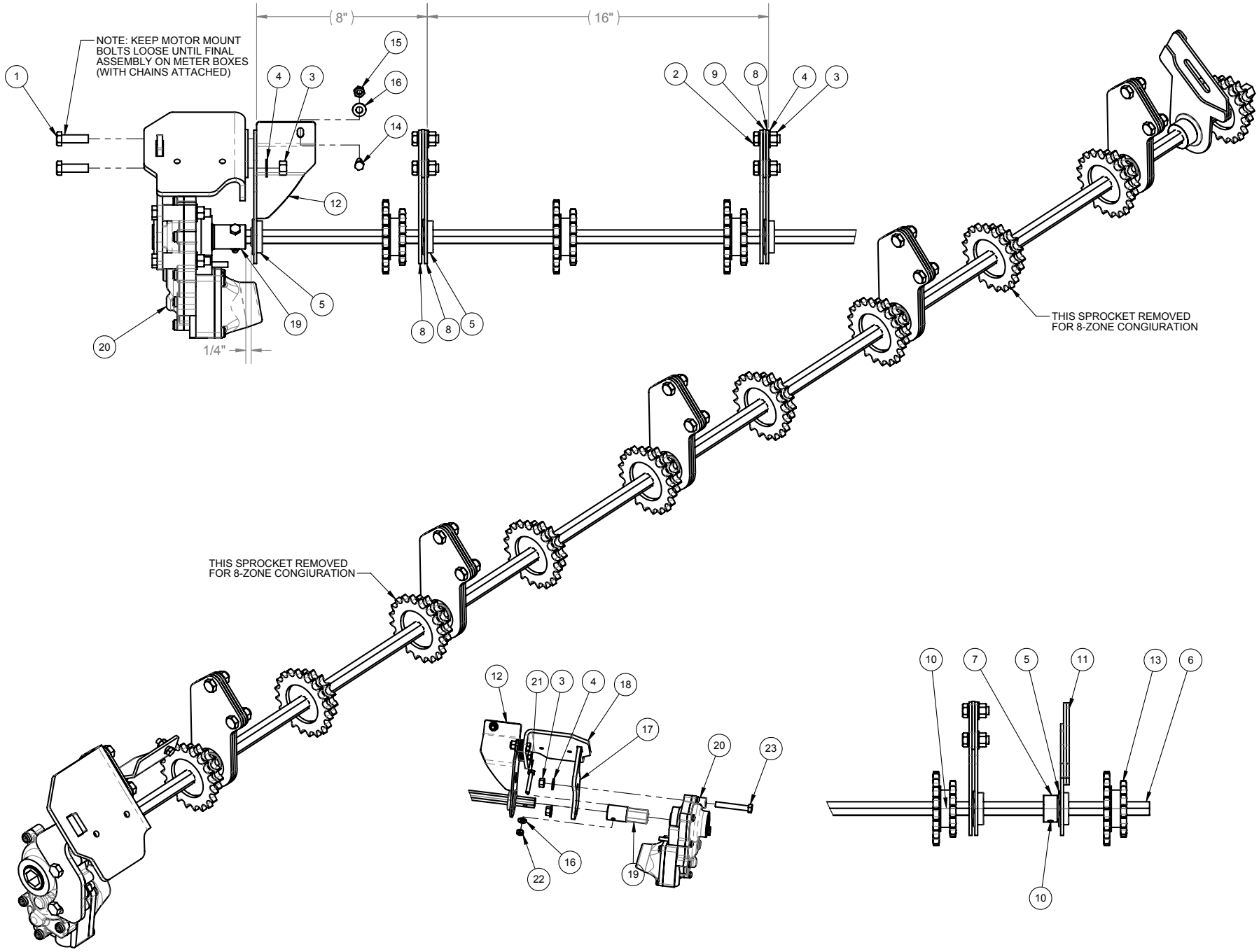
8"
16"
NOTE: KEEP MOTOR MOUNT BOLTS LOOSE UNTIL FINAL ASSEMBLY ON METER BOXES (WITH CHAINS ATTACHED)
1/4"
THIS SPROCKET REMOVED FOR 8-ZONE CONGIURATION
THIS SPROCKET REMOVED FOR 8-ZONE CONGIURATION

Parts Description:

Canola Tank Drive Shaft

Part No. 501670 – 10 Zone

501672 – 8 Zone

ITEM	QTY.	PART NO.	DESCRIPTION
1	12	250036	BOLT, HEX 3/8 X 1 IN GR5 PL
2	12	250453	NUT, HEX - 3/8 UNC PL
3	12	250557	WASHER, FLAT - 3/8 IN GR8 PL
4	11	250708	5/8 HEX BEARING FLUSH MOUNT - LUTCO
5	1	501686	SFT, DRIVE - HEX - 5/8 X 87" - STAINLESS - NOVA CANOLA TANK
6	1	500480	RETAINER, HEX SHAFT - 5/8 HEX BORE - PLASTIC
7	11	500482	SHEET, BEARING HOLDER 10GA - STAINLESS
8	6	500483	SHEET, SPACER 10GA - BEARING HOLDER - STAINLESS
9	11	250630	SCREW, SET - 1/4 X 3/8 UNC
10	1	500410	ASSY, NOVA END METER BEARING PLATE
11	1	500494-2	ASSY, MOTOR MOUNT SUPPORT - STAINLESS - NOVA
12	10	501892-1	ASSY, HUB - COMPLETE COMMON DRIVE - NOVA METER
13	1	250122	BOLT, HEX 1/4 X 3/4 IN GR5 PL
14	1	250458	NUT, HEX - 1/4 UNC PL
15	3	250559	WASHER, FLAT - 1/4 IN - PL
16	1	501685	ASSY, SPROCKET - 40T42 - X SERIES HUB - 5/8 HEX BORE - PLATE
17	1	501680	ASSY, TRANSITION - GEAR REDUCTION - NOVA - BLK
18	1	501687	SHAFT, HEX 5/8 X 4 1/2" - STAINLESS - NOVA GEAR REDUCTION
19	3	250607	PIN, SPRING - 3/16 X 1 1/4 IN
20	1	501684	ASSY, SPROCKET - 40T15 - W SERIES HUB - 5/8 HEX BORE - PLATE
21	1	501675	ASSY, PIVOT TRANSITION - GEAR REDUCTION - NOVA - BLK
22	4	250101	BOLT, CARRIAGE - 3/8 X 1 1/4 IN UNC GR5 PL
23	4	250400	NUT, FLANGE - 3/8 UNC PL
24	1	501679	SHEET, 14 GA S.S - PIVOT SPACER - GEAR REDUCTION - NOVA
25	1	250571	BOLT, HEX 1/4 X 2 1/2 IN GR5 PL
26	1	250507	NUT, LOCK - 1/4 UNC - STOVER - PL

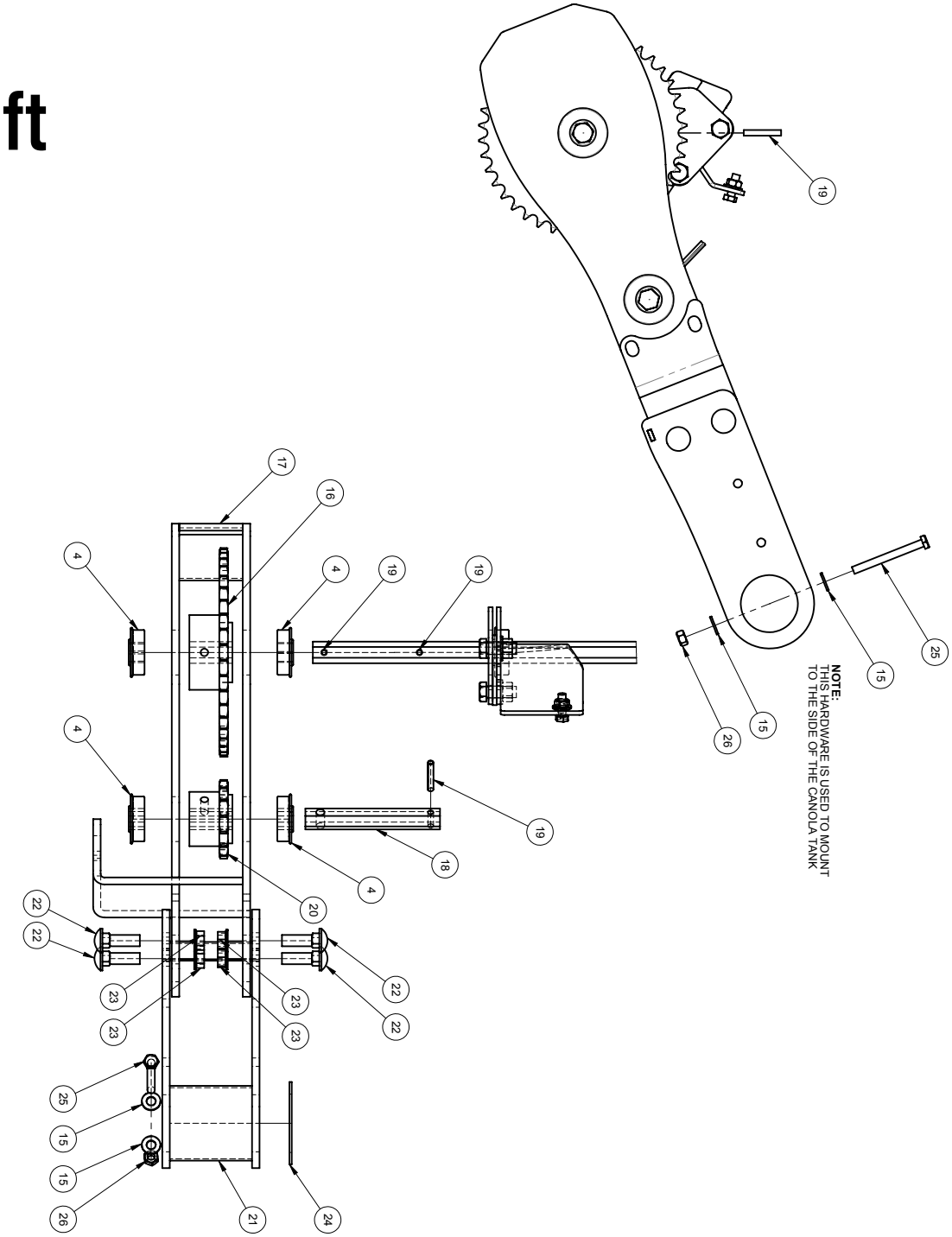

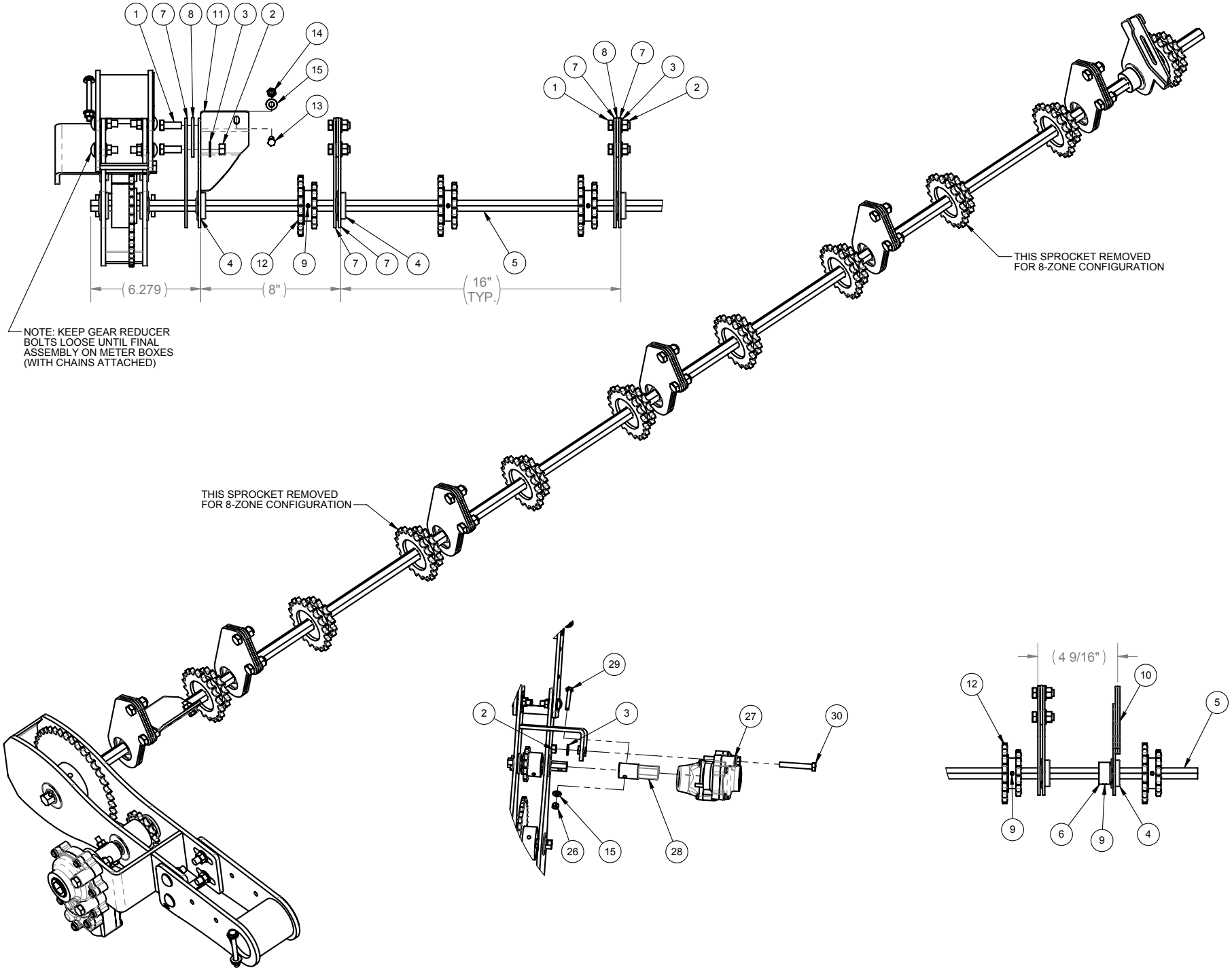
1
7
8
11
3
2
14
15
13
4
12
9
7
7
4
5
6.279
8"
16"
TYP.
NOTE: KEEP GEAR REDUCER BOLTS LOOSE UNTIL FINAL ASSEMBLY ON METER BOXES (WITH CHAINS ATTACHED)
THIS SPROCKET REMOVED FOR 8-ZONE CONFIGURATION
THIS SPROCKET REMOVED FOR 8-ZONE CONFIGURATION
29
2
3
27
30
26
15
28
4 9/16"
12
10
5
9
6
9
4

Parts Description:

Tank to Meter Transition

Part No. 500400 – 10 Zone
501249 – 8 Zone

500400

ITEM	QTY.	PART NO.	DESCRIPTION
1	1	500401-2	ASSY, TRANSITION - TANK TO METER - NOVA - BLK
2	10	500416-1	SERVICE SLOT RETAINING BOLT
3	2	500425-1	PLATE, CENTERING GUIDE 3/8 IN - NOVA - BLK
4	40	250100	BOLT, CARRIAGE - 3/8 X 1 1/2IN UND GR5 PL
5	4	250108	BOLT, CARRIAGE - 3/8 X 1 1/2IN UND GR5 PL
6	44	250557	WASHER, FLAT - 3/8 IN GR8 PL
7	44	250453	NUT, HEX - 3/8 UNC PL

501249 (Items 8-13 Used to Block Zones)

8	44	250557	WASHER, FLAT - 3/8 IN GR8 PL
9	44	250453	NUT, HEX - 3/8 UNC PL
10	8	250658	SCREW, SELF THREAD - 1/4 X 1 IN
11	8	250109	BOLT, CARRIAGE - 3/8 X 1 1/4 IN UNC - STAINLESS
12	8	250569	WASHER, FLAT - 3/8 IN SS
13	8	250464	NUT, HEX - 3/8 UNC GR5 JS500

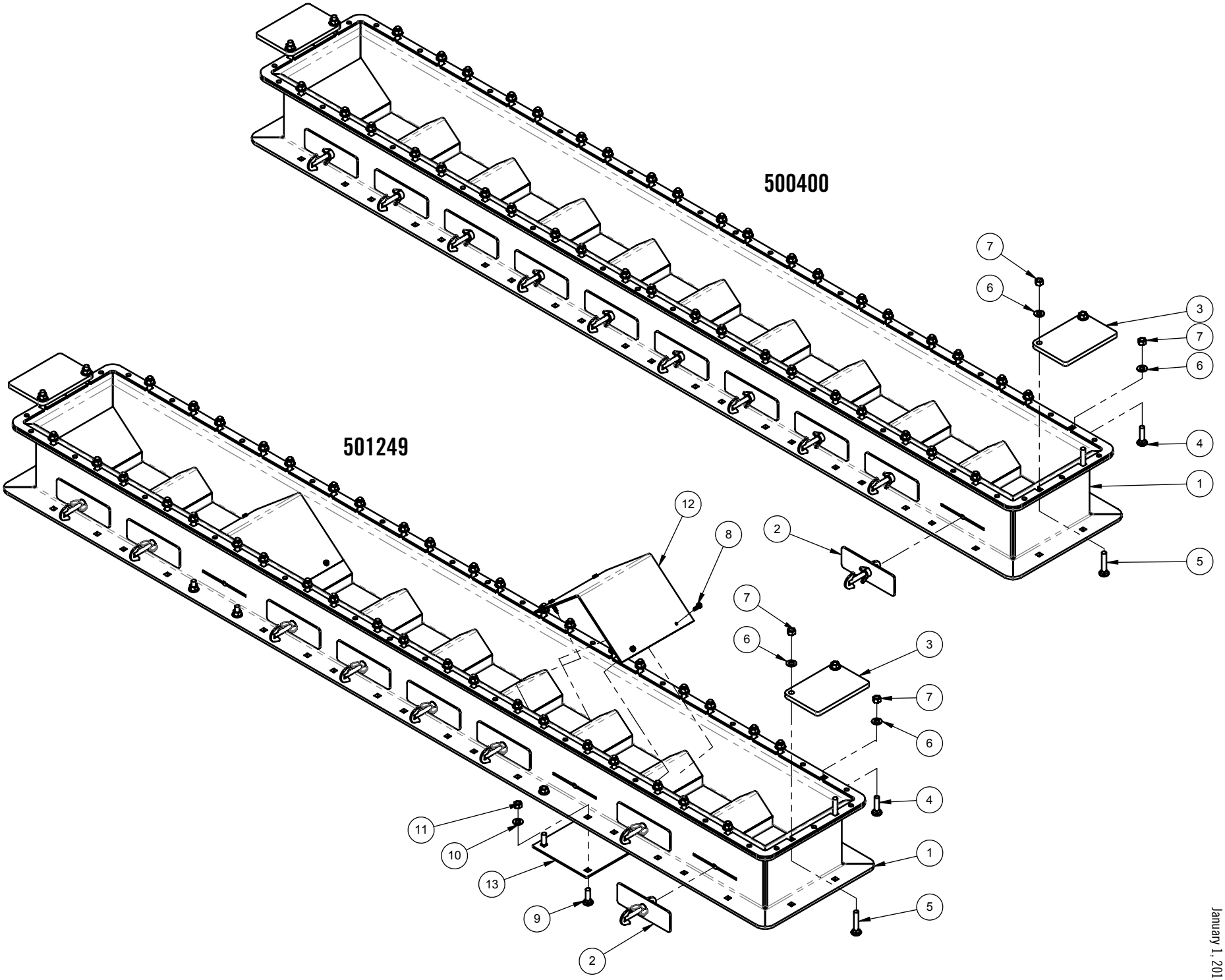
500400
501249
1
2
3
4
5
6
7
8
9
10
11
12
13

Parts Description:

Tank Lid

Part No. 500500-2

ITEM	QTY.	PART NO.	DESCRIPTION
1	1	500520-2	ASSY, AIR CART LID BASE ASSEMBLY
2	1	500530-1	ASSY, AIR CART LID
3	1	500545-1	ASSY, AIR CART LID ARM
4	2	500550-1	ASSY, PIN - 3/4 X 23 3/8 IN
5	1	258552	CYL, HYD 2 X 8 IN - FILL AUGER
6	2	250552	WASHER, FLAT 3/4IN GR8 PL
7	2	250607	PIN, SPRING - 3/16 X 1 1/4 IN
8	22	250110	BOLT, ELEVATOR - 3/8 X 2 IN UNC GR5 PL
9	22	250581	WASHER, RUBBER - FLAT - 0.4 SQ ID X 1 OD
10	22	250566	WASHER, FLAT - 3/8 IN PL
11	22	250453	NUT, HEX - 3/8 UNC PL
12	1	LID SEAL	CELLTITE SPONGE - 1/2 X 2 IN

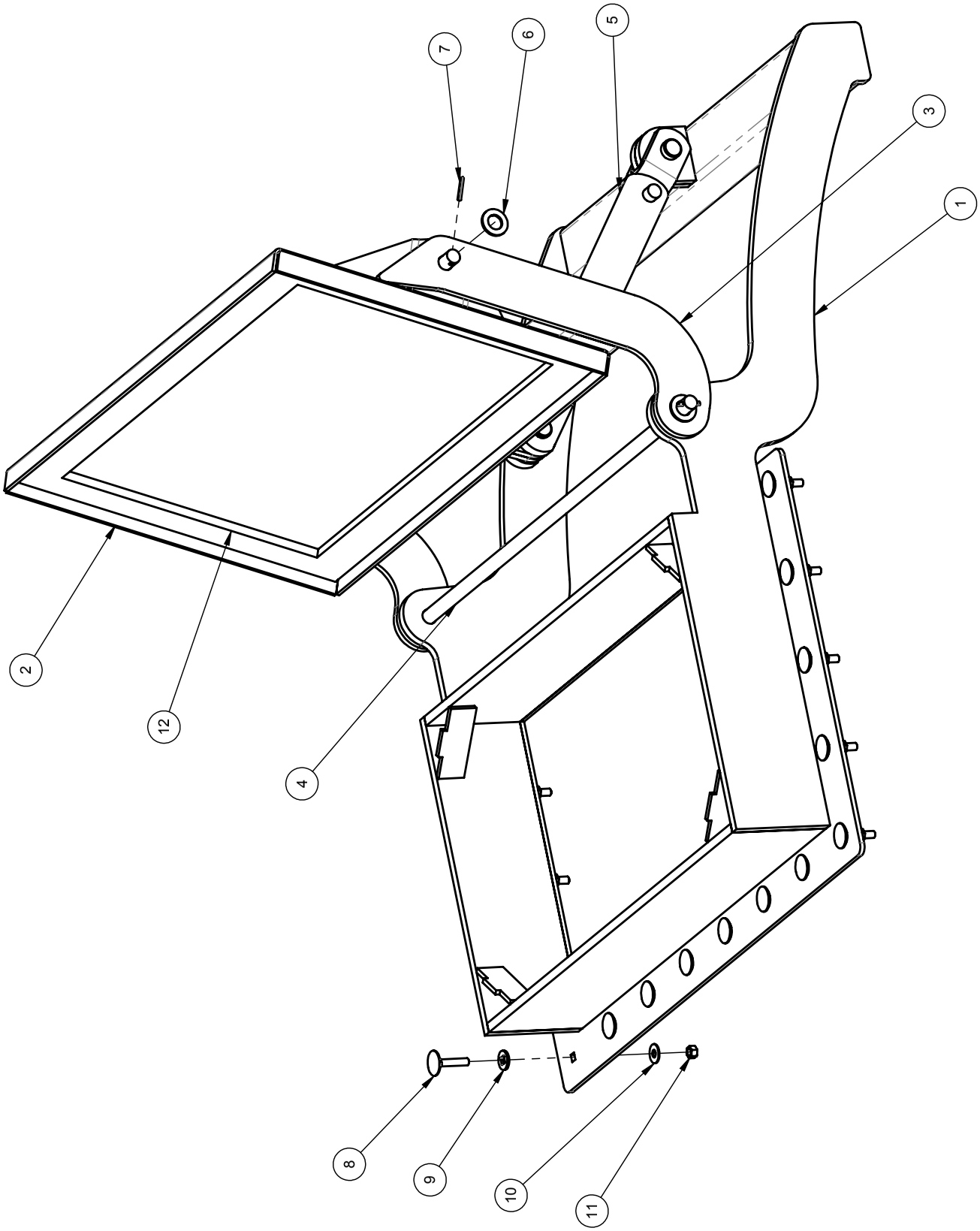
2
12
4
8
9
10
11
7
6
5
3
1

Parts Description:

40 BU Canola Tank

Part No. 500660 – 10 Zone
500655 – 8 Zone

500655 (Items 10 to 15 not used in 500660)

ITEM	QTY.	PART NO.	DESCRIPTION
1	1	500661-5	ASSY, CANOLA TANK - 40BU - NOVA - YEL
2	1	500685	ASSY, CANOLA TANK LID ARM - NOVA - BLK
3	1	500695	ASSY, CANOLA TANK LID - NOVA - BLK
4	1	500835	ASSY - CANOLA TANK SCREEN - NOVA - YEL
5	2	500690-2	ASSY, HINGE PIN-3/4 X 23 3/8 IN - CANOLA TANK LID-BLK
6	1	258551	CYL, HYD 2 X 4 IN - FILL AUGER
7	2	250552	WASHER, FLAT 3/4IN GR8 PL
8	2	250599	PIN, SPRING - 3/16 X 1 IN
9	8	500416-1	SERVICE SLOT RETAINING BOLT
10	2	501252	SHEET, FRMD 10 GA - DIVIDER - 8 OUTLET CANOLA TANI
11	8	250658	SCREW, SELF THREAD - 1/4 X 1 IN
12	2	501253	PLATE, METER BLOCKER - BOTTOM - NOVA
13	8	250109	BOLT, CARRIAGE - 3/8 X 1 1/4 IN UNC - STAINLESS
14	8	250569	WASHER, FLAT - 3/8 IN SS
15	8	250464	NUT, HEX - 3/8 UNC GR5 JS500

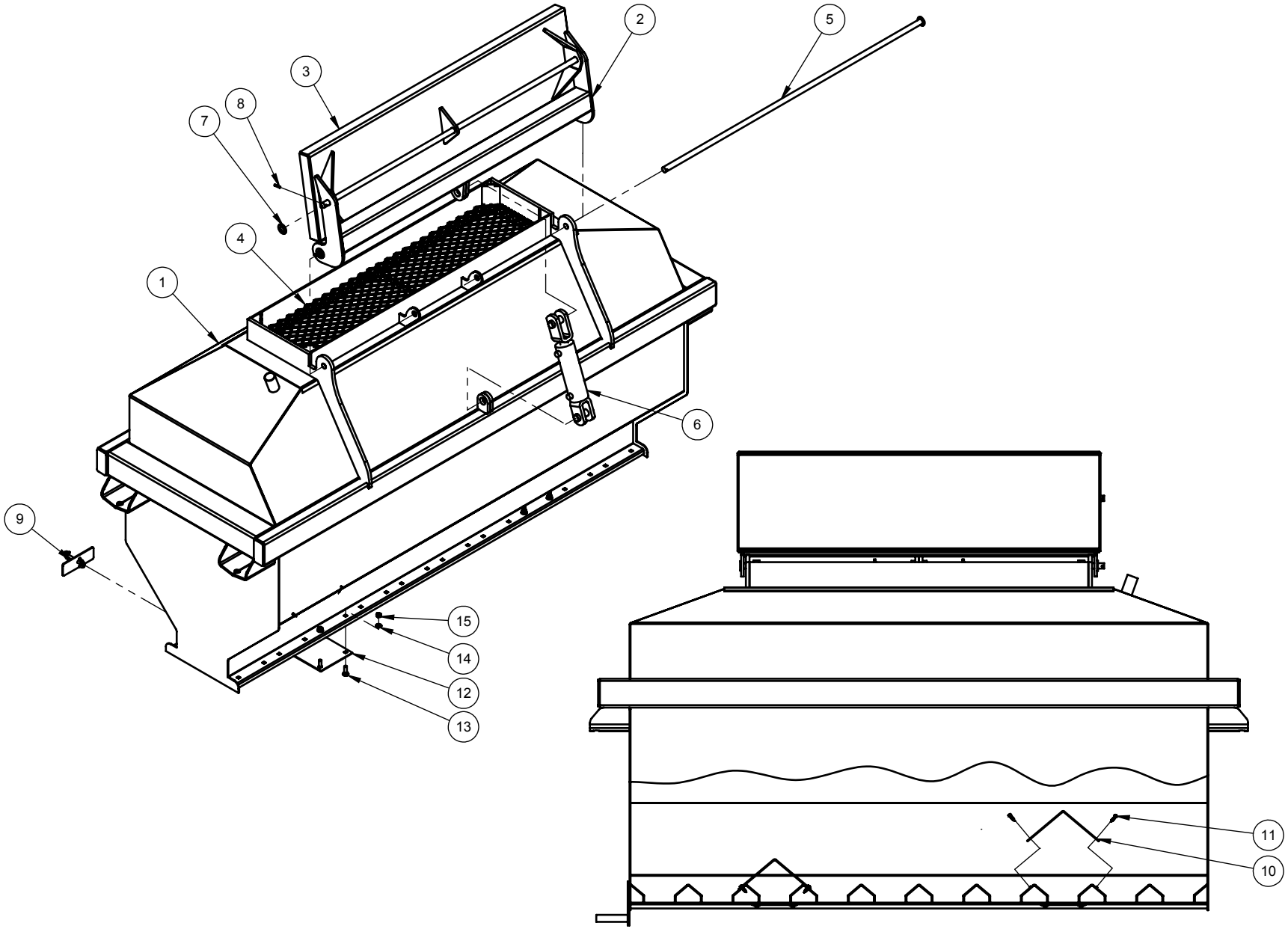

NOTE : SECTION VIEW SHOWING DIVIDER PLATE ASSEMBLY
FOR 8 ZONE CONFIGURATION

Parts Description:

110 BU T/B Nova Tank

Part No. 503100 – 10 Zone

503099 – 8 Zone

503099 (Items 28 to 33 not used in 503100)

ITEM	QTY.	PART NO.	DESCRIPTION
1	1	503130	ASSY, BTM SECTION - 110BU TANK - T/B NOVA - YEL
2	1	503125	ASSY, MID SECTION - 110BU TANK - T/B NOVA - YEL
3	1	503110	ASSY, TOP SECTION - 110BU TANK - T/B NOVA - YEL
4	2	503155	ASSY, HINGE PIN - 110BU TANK - T/B NOVA - BLK
5	1	503150-1	ASSY, LID ARM - 110BU TANK - T/B NOVA - BLK
6	2	258551	CYL, HYD 2 X 4 IN - FILL AUGER
7	1	503145	ASSY, LID - 110BU TANK - T/B NOVA - BLK
8	1	503180	ASSY, REAR WALKWAY - 110BU TANK - T/B NOVA - BLK
9	2	503184	PLATE, FRMD - 1/4 IN - R.H. STEP - 110BU TANK - T/B NOVA - BLK
10	2	503183	PLATE, FRMD - 1/4 IN - L.H. STEP - 110BU TANK - T/B NOVA - BLK
11	2	501640	ASSY, STEP - BETWEEN TANK STEP - NOVA - BLK
12	1	503170	ASSY, FRONT WALKWAY - 110BU TANK - T/B NOVA - BLK
13	1	503160	ASSY - SCREEN - 110BU TANK - T/B NOVA - YEL
14	4	257250	DIGISTAR LOAD CELL
15	4	403849	BUSH, 1.500 OD X .75 ID X 3/4 IN
16	4	250094	BOLT, HEX 3/4 X 4 UNF GR5 PL
17	4	403848	PLATE, SPACER 3/4 IN - AIR CART CRADLE MOUNT
18	1	503190	ASSY, RIGHT LOAD CELL MOUNT - 110BU TANK - T/B NOVA - BLK
19	1	503185	ASSY, LEFT LOAD CELL MOUNT - 110BU TANK - T/B NOVA - BLK
20	118	250101	BOLT, CARRIAGE - 3/8 X 1 1/4 IN UNC GR5 PL
21	104	250400	NUT, FLANGE - 3/8 UNC PL
22	20	250552	WASHER, FLAT 3/4IN GR8 PL
23	8	250082	BOLT, HEX 3/4 X 3 3/4 UNC GR5 PL
24	8	250451	NUT, HEX 3/4 UNC GR5 PL
25	22	250453	NUT, HEX - 3/8 UNC PL
26	30	250557	WASHER, FLAT - 3/8 IN GR8 PL
27	8	250036	BOLT, HEX 3/8 X 1 IN GR5 PL
28	8	250109	BOLT, CARRIAGE - 3/8 X 1 1/4 IN UNC - STAINLESS
29	8	250464	NUT, HEX - 3/8 UNC GR5 JS500
30	8	250569	WASHER, FLAT - 3/8 IN SS
31	8	250658	SCREW, SELF THREAD - 1/4 X 1 IN
32	2	503141	SHEET, FRMD 10 GA - 8 ZONE DIVIDER - 110BU TANK - YEL
33	2	501253	PLATE, METER BLOCKER - BOTTOM - NOVA

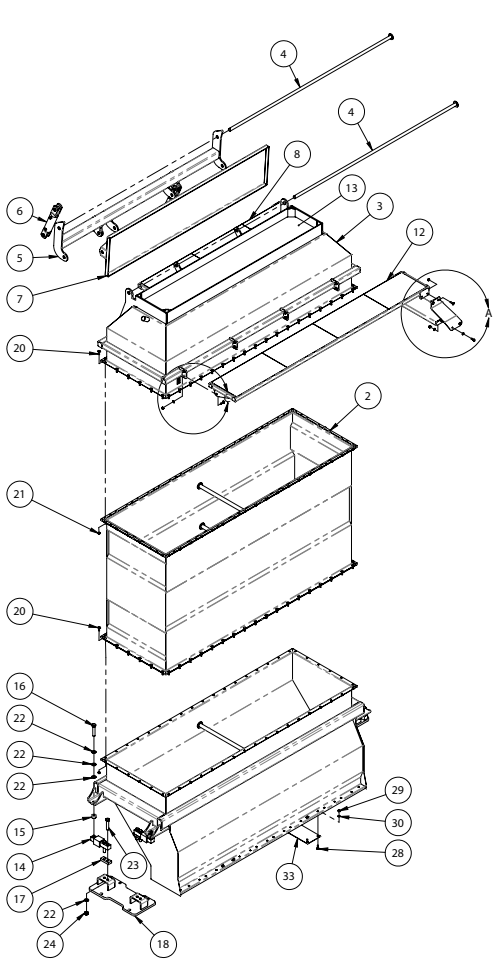

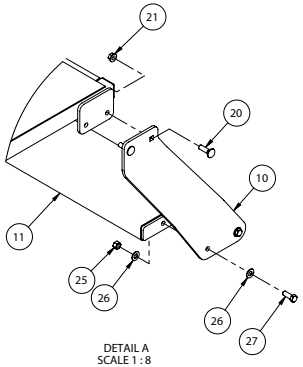

DETAIL A
SCALE 1 : 8

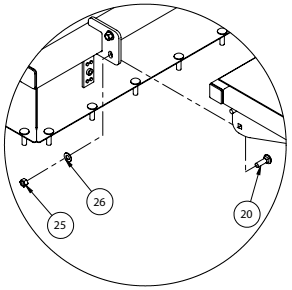

DETAIL C
SCALE 1 : 8

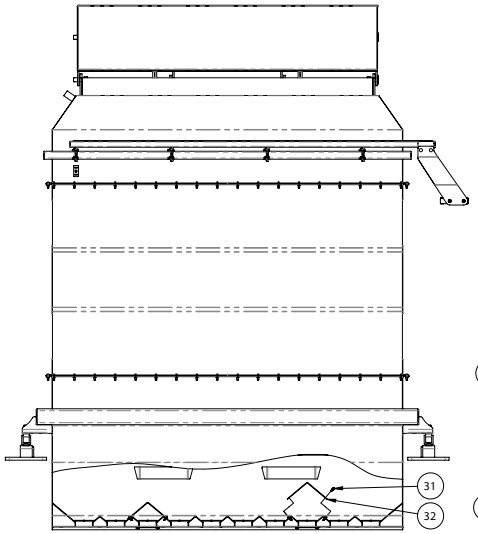

NOTE : SECTION VIEW SHOWING DIVIDER PLATE ASSEMBLY
FOR 8 ZONE CONFIGURATION

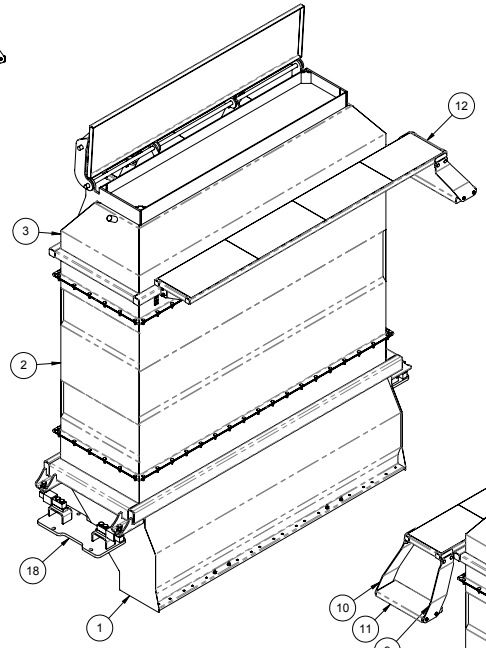

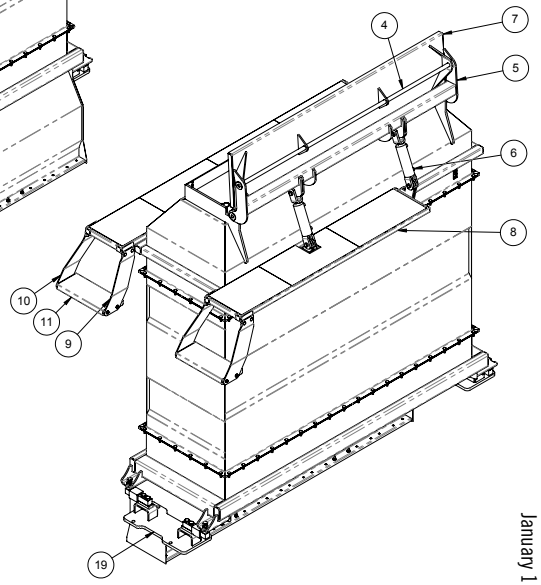

Parts Description:

Fans/Air Splitter

Part No. 500825-1 – Dual Shoot 10 Zone
501065-1 – Single Shoot 10 Zone
501070-1 – Single Shoot 8 Zone
501071-1 – Dual Shoot 8 Zone

500825-1

ITEM	QTY.	PART NO.	DESCRIPTION
1	1	501460	ASSY, AIR SPLITTER - S3 - DUAL - NOVA
2	20	500830	ASSY, AIR GATE - 2 1/2 IN HOSE - AIR SPLITTER - NOVA - BLK
3	2	258404	MOTOR, HYD - 6 IN FAN - SAUER-DANFOSS - 11CC - 3/4 O
4	4	250093	BOLT, HEX 3/8 X 1 3/4 IN GR5 PL
5	58	250101	BOLT, CARRIAGE - 3/8 X 1 1/4 IN UNC GR5 PL
6	40	250635	BOLT RETAINER - 3/8 IN
7	63	250400	NUT, FLANGE - 3/8 UNC PL
8	4	250619	PIN, COTTER 1/8 X 1 1/4
9	6	250019	BOLT, HEX 3/8 X 1 1/4 IN GR5 PL
10	4	250014	BOLT, HEX 3/4 X 2 UNC GR5 PL
11	4	250552	WASHER, FLAT 3/4IN GR8 PL
12	4	250451	NUT, HEX 3/4 UNC GR5 PL
13	8	250557	WASHER, FLAT - 3/8 IN GR8 PL
14	4	250453	NUT, HEX - 3/8 UNC PL
15	1	250103	BOLT, CARRIAGE - 3/8 X 3/4 IN UNC GR5 PL
16	2	255910	GAUGE, PRESSURE - AIR - P734 2.5 0-36 OUNCES 1/4LM BRASS
17	2	250555	WASHER, FLAT - 1/2 IN - GR8 - PL
18	2	260090	HOSE BARB, 1/4 FPT X 1/4 HB
19	2	255931	COUPLER, JAW - QUICKFLEX - S3 FAN - 1-1/8 SHAFT
20	2	255930	COUPLER, JAW - QUICKFLEX - S3 FAN - 3/4 SHAFT
21	2	255933	COUPLER, COVER - QUICKFLEX - S3 FAN
22	1	501490	PLATE, FRMD 10GA - GAUGE MNT - AIR SPLITTER - DUAL
23	2	255920	FAN - S3 - RT-176 C/W MOTOR MNT
24	2	255932	COUPLER, INSERT - QUICKFLEX - WHITE - S3 FAN
25	1	501495	ASSY, RPM SENSOR MNT - S3 FAN
26	2	501494	SHEET, FRMD 10GA - S3 RPM PICKUP

501065-1 (Substitute Items Below)

ITEM	QTY	PART NO.	DESCRIPTION
1	1	501480	ASSY, AIR SPLITTER - S3 - SINGLE - NOVA

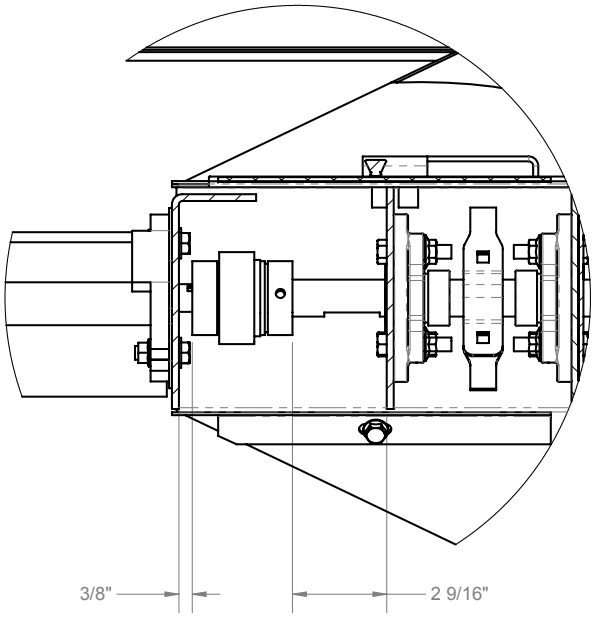

DETAIL A
SCALE 1 : 4

NOTE: COUPLER INSTALLATION DETAIL

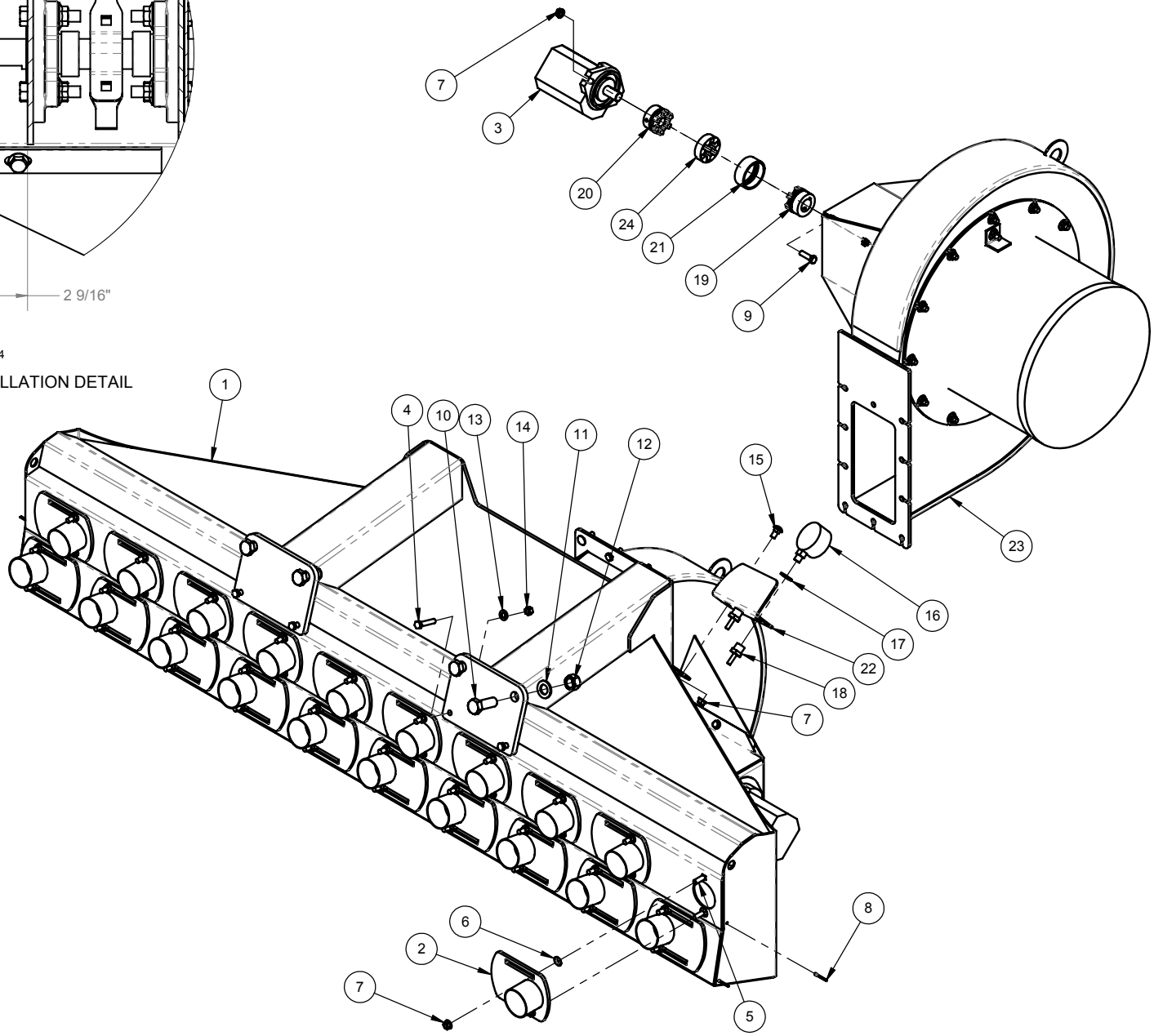

Parts Description:

Fans/Air Splitter – T/B Nova

Part No. 503450 – Dual Shoot 10 Zone
503440 – Single Shoot 10 Zone
503455 – Single Shoot 8 Zone
503250 – Dual Shoot 8 Zone

503455

ITEM	QTY.	PART NO.	DESCRIPTION
1	1	503660	ASSY, AIR SPLITTER - S3 - SINGLE 8 IN - T/B NOVA - BLK
2	1	255920	FAN - S3 - RT-176 C/W MOTOR MNT
3	1	258404	MOTOR, HYD - 6 IN FAN - SAUER-DANFOSS - 11CC - 3/4 OUTPUT
4	8	500830	ASSY, AIR GATE - 2 1/2 IN HOSE - AIR SPLITTER - NOVA - BLK
5	29	250101	BOLT, CARRIAGE - 3/8 X 1 1/4 IN UNC GR5 PL
6	20	250635	BOLT RETAINER - 3/8 IN
7	32	250400	NUT, FLANGE - 3/8 UNC PL
8	2	250619	PIN, COTTER 1/8 X 1 1/4
9	1	255930	COUPLER, JAW - QUICKFLEX - S3 FAN - 3/4 SHAFT
10	1	255933	COUPLER, COVER - QUICKFLEX - S3 FAN
11	1	255931	COUPLER, JAW - QUICKFLEX - S3 FAN - 1-1/8 SHAFT
12	3	250019	BOLT, HEX 3/8 X 1 1/4 IN GR5 PL
13	1	255932	COUPLER, INSERT - QUICKFLEX - WHITE - S3 FAN
14	1	250555	WASHER, FLAT - 1/2 IN - GR8 - PL
15	1	255910	GAUGE, PRESSURE - AIR - P734 2.5 0-36 OUNCES 1/4LM BRASS
16	1	260090	HOSE BARB, 1/4 FPT X 1/4 HB
17	1	250103	BOLT, CARRIAGE - 3/8 X 3/4 IN UNC GR5 PL
18	2	501251	PLATE, BLOCKER 1/4IN - AIR SPLITTER - NOVA - BLK
19	4	250220	BOLT, U-SQ - 3/4 UNC X 8 ID X 10 IN -2 IN THD - GR8 PL
20	8	250451	NUT, HEX 3/4 UNC GR5 PL
21	8	250552	WASHER, FLAT 3/4IN GR8 PL
22	1	503254	PLATE, FRMD 10GA - GAUGE MNT - AIR SPLITTER - SINGLE S3 - T/B

503440 (Substitute Items Below)

ITEM	QTY	PART NO.	DESCRIPTION
1	1	501480	ASSY, AIR SPLITTER - S3 - SINGLE - NOVA

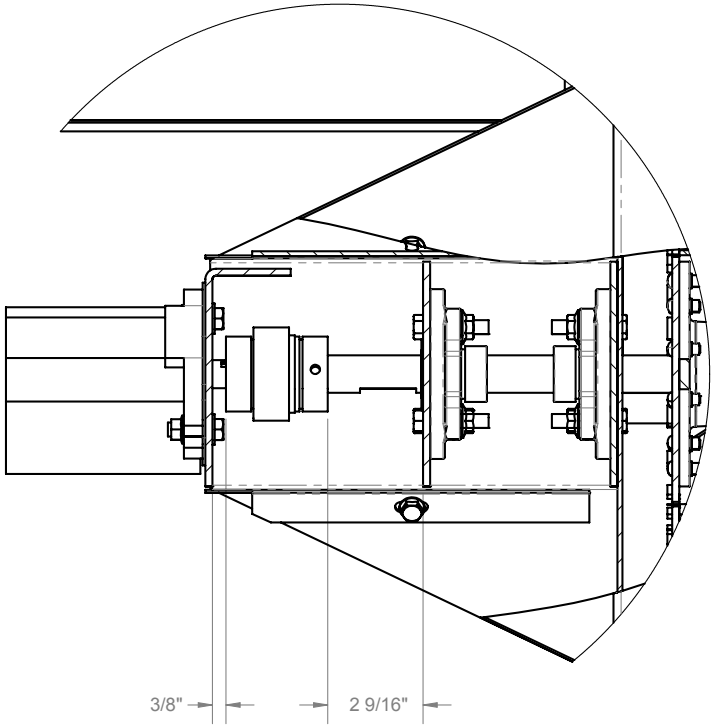

DETAIL A
SCALE 1 : 4

NOTE: COUPLER INSTALLATION DETAIL

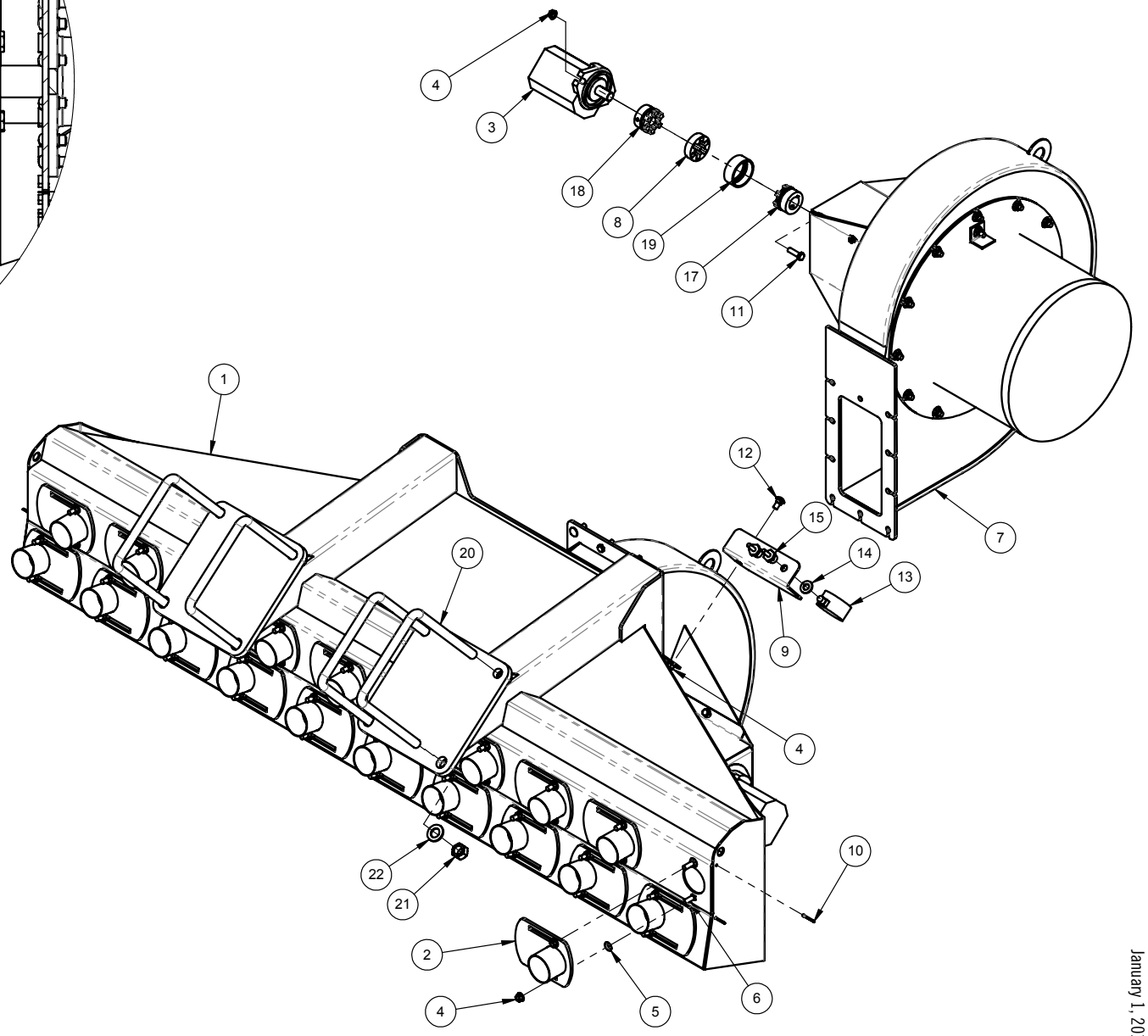

Parts Description:

Rear Walkway - 820/560 Nova

Part No. 500650 – Dual Shoot 10 Zone
501060 – Single Shoot 10 Zone
501077 – Single Shoot 8 Zone
501078 – Dual Shoot 8 Zone

500650

ITEM	QTY.	PART NO.	DESCRIPTION
1	1	500660	BDL, CANOLA TANK - 10 ZONE - NOVA
2	1	500716-2	ASSY, CANOLA TANK MNT - LH - NOVA - BLK
3	1	500715-1	ASSY, CANOLA TANK MNT - RH - NOVA - BLK
4	1	500740-6	ASSY, PLATFORM - AIR CART REAR WALKWAY
5	1	500825-1	BDL, AIR SPLITTER - DUAL S3 - NOVA
6	1	500771-1	ASSY, HANDRAIL - LH - REAR STAIR - NOVA - BLK
7	1	500770-1	ASSY, HANDRAIL - RH - REAR STAIR - NOVA - BLK
8	1	500764-1	ASSY, SUPPORT - REAR STAIR - NOVA - BLK
9	1	500785	ASSY, STEP - BETWEEN TANK STEP - NOVA - BLK
10	2	500790	PLATE, 1/4 IN - SIDE - REAR FLIP STEP - BLK
11	9	500792	STEP, SURE GRIP - 7 X 20 7/8 IN - GALV - NOVA
12	1	500795-1	ASSY, HANDRAIL - RH - TOP STAIR - NOVA - BLK
13	1	500796-1	ASSY, HANDRAIL - LH - TOP STAIR - NOVA - BLK
14	1	500760-1	ASSY, HAND RAIL - REAR WALKWAY - NOVA - BLK
15	1	500280-1	ASSY, HAND RAIL - SIDE WALK - NOVA - BLK
16	1	500794	ASSY, SUPPORT - REAR STAIR - NOVA - BLK
17	2	500797	SHEET, 12AG - SPACER - NOVA REAR STAIR
18	1	500780	ASSY, REAR STAIR BRACE - NOVA XP 820
19	6	250001	BOLT, HEX 1/2 X 1 1/2 IN GR5 PL
20	16	250555	WASHER, FLAT - 1/2 IN - GR8 - PL
21	48	250036	BOLT, HEX 3/8 X 1 IN GR5 PL
22	88	250557	WASHER, FLAT - 3/8 IN GR8 PL
23	4	250450	NUT, HEX 1/2 UNC GR5 PL
24	44	250453	NUT, HEX - 3/8 UNC PL
25	1	250002	BOLT, HEX 5/8 X 3 3/4 UNC GR8 PL
26	1	250550	WASHER, FLAT 5/8 IN GR8 PL
27	1	250500	NUT, LOCK 5/8 UNC - STOVER - PL
28	2	250048	BOLT, HEX 1/2 X 2 IN GR5 PL
29	2	250000	BOLT, HEX 1/2 X 2 1/4 IN GR5 PL
30	6	250504	NUT, LOCK - 1/2 UNC - STOVER - PL
31	8	250003	BOLT, HEX 3/4 X 2 1/2 UNC GR5 PL
32	28	250552	WASHER, FLAT 3/4IN GR8 PL
33	16	250451	NUT, HEX 3/4 UNC GR5 PL
34	12	250006	BOLT, HEX 7/8 X 2 1/4 UNC GR5 PL
35	12	250553	WASHER, FLAT 7/8IN GR8 PL
36	12	250452	NUT, HEX - 7/8 UNC PL
37	10	250400	NUT, FLANGE - 3/8 UNC PL
38	6	250101	BOLT, CARRIAGE - 3/8 X 1 1/4 IN UNC GR5 PL
39	4	257250	DIGISTAR LOAD CELL
40	4	403849	BUSH, 1.500 OD X .75 ID X 3/4 IN
41	8	250082	BOLT, HEX 3/4 X 3 3/4 UNC GR5 PL
42	4	250094	BOLT, HEX 3/4 X 4 UNF GR5 PL

501060 (Substitute Items Below)

ITEM	QTY	PART NO.	DESCRIPTION
5	1	501065-1	BDL, AIR SPLITTER - SINGLE S3 - NOVA

501077 (Substitute Items Below)

ITEM	QTY	PART NO.	DESCRIPTION
1	1	500655	BDL, CANOLA TANK - 8 ZONE - NOVA
5	1	501070-1	BDL, AIR SPLITTER - SINGLE S3 - 8 ZONE - NOVA

501078 (Substitute Items Below)

ITEM	QTY	PART NO.	DESCRIPTION
1	1	500655	BDL, CANOLA TANK - 8 ZONE - NOVA
5	1	501071-1	BDL, AIR SPLITTER - DUAL S3 - 8 ZONE - NOVA

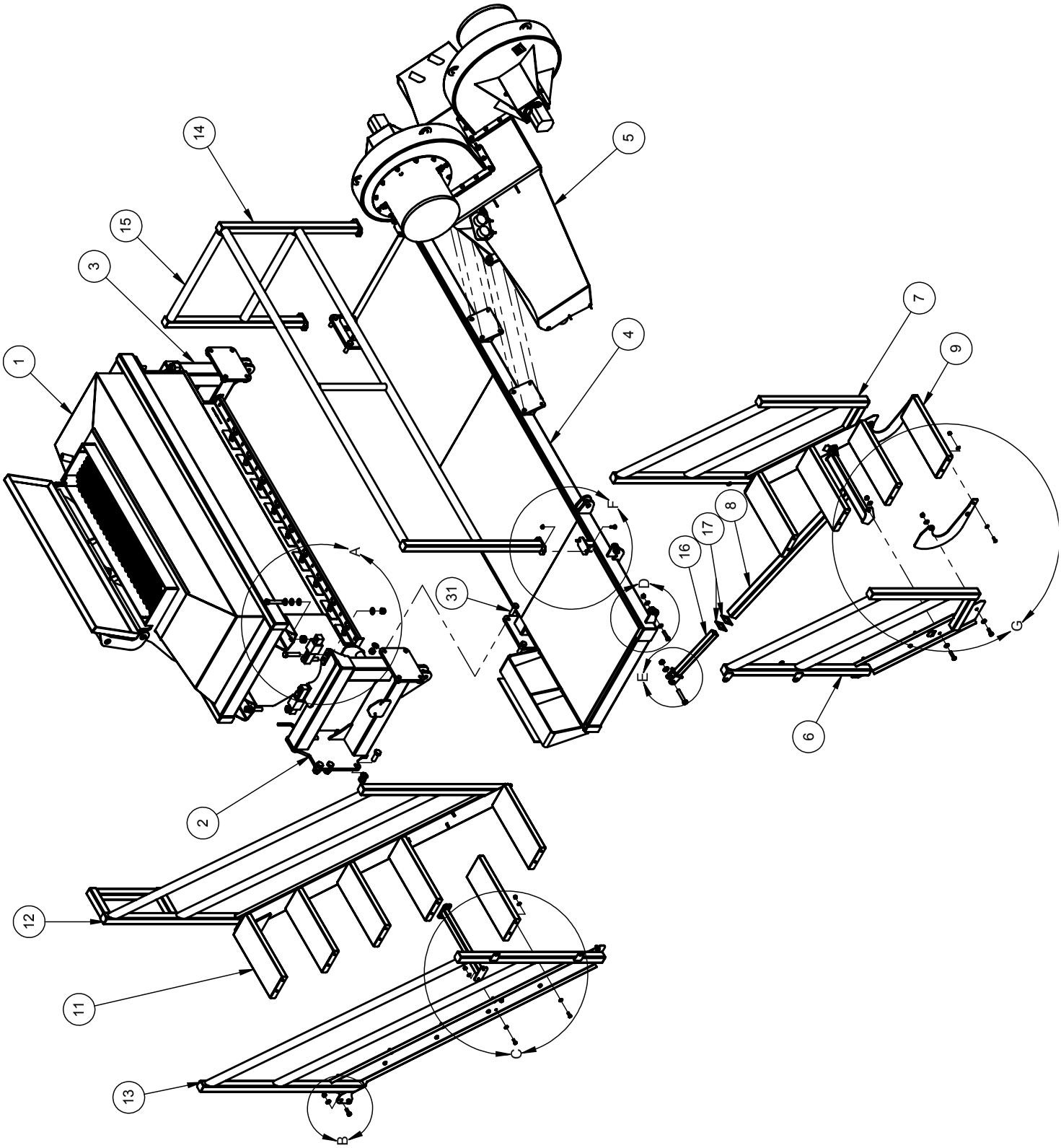
1
2
3
4
5
6
7
8
9
11
12
13
14
15
16
17
31
A
B
C
D
E
F
G

500650

ITEM	QTY.	PART NO.	DESCRIPTION
1	1	500660	BDL, CANOLA TANK - 10 ZONE - NOVA
2	1	500716-2	ASSY, CANOLA TANK MNT - LH - NOVA - BLK
3	1	500715-1	ASSY, CANOLA TANK MNT - RH - NOVA - BLK
4	1	500740-6	ASSY, PLATFORM - AIR CART REAR WALKWAY
5	1	500825-1	BDL, AIR SPLITTER - DUAL S3 - NOVA
6	1	500771-1	ASSY, HANDRAIL - LH - REAR STAIR - NOVA - BLK
7	1	500770-1	ASSY, HANDRAIL - RH - REAR STAIR - NOVA - BLK
8	1	500764-1	ASSY, SUPPORT - REAR STAIR - NOVA - BLK
9	1	500785	ASSY, STEP - BETWEEN TANK STEP - NOVA - BLK
10	2	500790	PLATE, 1/4 IN - SIDE - REAR FLIP STEP - BLK
11	9	500792	STEP, SURE GRIP - 7 X 20 7/8 IN - GALV - NOVA
12	1	500795-1	ASSY, HANDRAIL - RH - TOP STAIR - NOVA - BLK
13	1	500796-1	ASSY, HANDRAIL - LH - TOP STAIR - NOVA - BLK
14	1	500760-1	ASSY, HAND RAIL - REAR WALKWAY - NOVA - BLK
15	1	500280-1	ASSY, HAND RAIL - SIDE WALK - NOVA - BLK
16	1	500794	ASSY, SUPPORT - REAR STAIR - NOVA - BLK
17	2	500797	SHEET, 12AG - SPACER - NOVA REAR STAIR
18	1	500780	ASSY, REAR STAIR BRACE - NOVA XP 820
19	6	250001	BOLT, HEX 1/2 X 1 1/2 IN GR5 PL
20	16	250555	WASHER, FLAT - 1/2 IN - GR8 - PL
21	48	250036	BOLT, HEX 3/8 X 1 IN GR5 PL
22	88	250557	WASHER, FLAT - 3/8 IN GR8 PL
23	4	250450	NUT, HEX 1/2 UNC GR5 PL
24	44	250453	NUT, HEX - 3/8 UNC PL
25	1	250002	BOLT, HEX 5/8 X 3 3/4 UNC GR8 PL
26	1	250550	WASHER, FLAT 5/8 IN GR8 PL
27	1	250500	NUT, LOCK 5/8 UNC - STOVER - PL
28	2	250048	BOLT, HEX 1/2 X 2 IN GR5 PL
29	2	250000	BOLT, HEX 1/2 X 2 1/4 IN GR5 PL
30	6	250504	NUT, LOCK - 1/2 UNC - STOVER - PL
31	8	250003	BOLT, HEX 3/4 X 2 1/2 UNC GR5 PL
32	28	250552	WASHER, FLAT 3/4IN GR8 PL
33	16	250451	NUT, HEX 3/4 UNC GR5 PL
34	12	250006	BOLT, HEX 7/8 X 2 1/4 UNC GR5 PL
35	12	250553	WASHER, FLAT 7/8IN GR8 PL
36	12	250452	NUT, HEX - 7/8 UNC PL
37	10	250400	NUT, FLANGE - 3/8 UNC PL
38	6	250101	BOLT, CARRIAGE - 3/8 X 1 1/4 IN UNC GR5 PL
39	4	257250	DIGISTAR LOAD CELL
40	4	403849	BUSH, 1.500 OD X .75 ID X 3/4 IN
41	8	250082	BOLT, HEX 3/4 X 3 3/4 UNC GR5 PL
42	4	250094	BOLT, HEX 3/4 X 4 UNF GR5 PL

Parts Description:

Rear Walkway - 820/560 Nova

Part No. 500650 – Dual Shoot 10 Zone
501060 – Single Shoot 10 Zone
501077 – Single Shoot 8 Zone
501078 – Dual Shoot 8 Zone

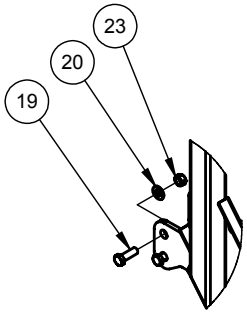

DETAIL B
SCALE 1 : 15

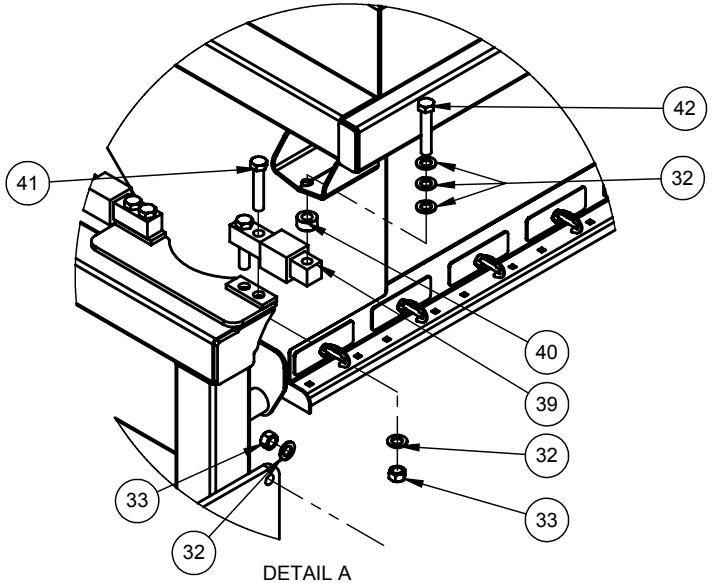

DETAIL A
SCALE 1 : 15

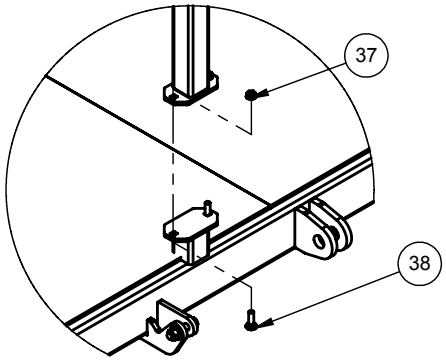

DETAIL F
SCALE 1 : 15

NOTE : SOME ITEMS SHOWN IN THIS VIEW ARE FROM BDL 403981

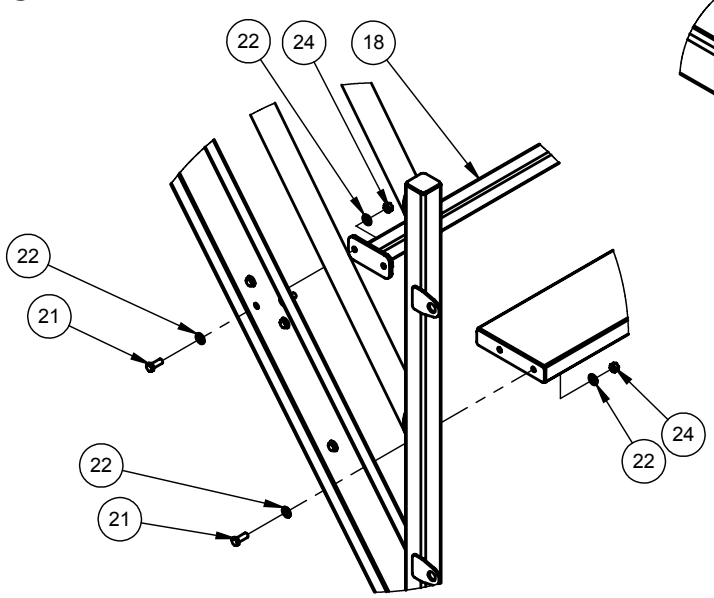

DETAIL C
SCALE 1 : 15

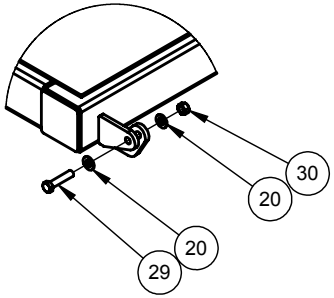

DETAIL D
SCALE 1 : 15

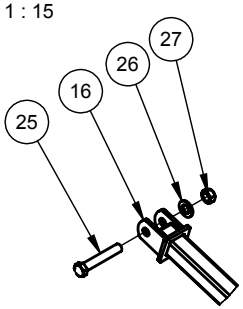

DETAIL E
SCALE 1 : 15

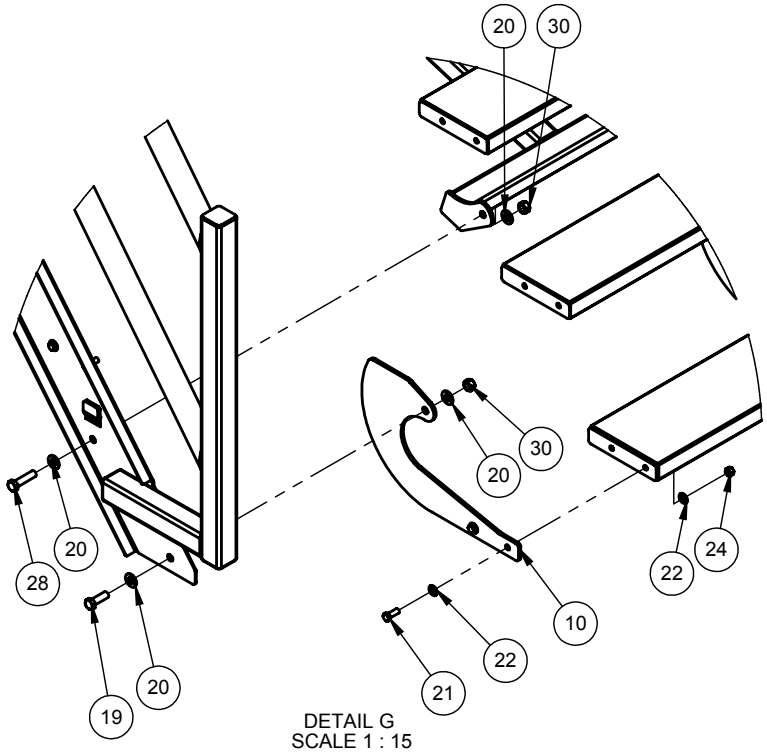

DETAIL G
SCALE 1 : 15

Parts Description:

Rear Walkway - 780/520 Nova

Part No. 501050 – Dual Shoot 10 Zone
501000 – Single Shoot 10 Zone
501075 – Single Shoot 8 Zone
501076 – Dual Shoot 8 Zone

501050

ITEM	QTY.	PART NO.	DESCRIPTION
1	1	501005-4	ASSY, FAN AND STAIR MOUNT - 780 BU NOVA
2	1	500825-1	BDL, AIR SPLITTER - DUAL S3 - NOVA
3	1	501015	ASSY, SINGLE SHOOT HANDRAIL RH - NOVA - BLK
4	1	500785	ASSY, STEP - BETWEEN TANK STEP - NOVA - BLK
5	2	500790	PLATE, 1/4 IN - SIDE - REAR FLIP STEP - BLK
6	9	500792	STEP, SURE GRIP - 7 X 20 7/8 IN - GALV - NOVA
7	1	501020	ASSY, SINGLE SHOOT HANDRAIL LH - NOVA - BLK
8	6	250450	NUT, HEX 1/2 UNC GR5 PL
9	6	250001	BOLT, HEX 1/2 X 1 1/2 IN GR5 PL
10	10	250555	WASHER, FLAT - 1/2 IN - GR8 - PL
11	2	250504	NUT, LOCK - 1/2 UNC - STOVER - PL
12	2	250013	BOLT, HEX 1/2 X 1 1/4 IN GR5 PL
13	12	250006	BOLT, HEX 7/8 X 2 1/4 UNC GR5 PL
14	12	250452	NUT, HEX - 7/8 UNC PL
15	12	250553	WASHER, FLAT 7/8IN GR8 PL
16	40	250453	NUT, HEX - 3/8 UNC PL
17	80	250557	WASHER, FLAT - 3/8 IN GR8 PL
18	40	250036	BOLT, HEX 3/8 X 1 IN GR5 PL

501000 (Substitute Items Below)

ITEM	QTY	PART NO.	DESCRIPTION
5	1	501065-1	BDL, AIR SPLITTER - SINGLE S3 - NOVA

501075 (Substitute Items Below)

ITEM	QTY	PART NO.	DESCRIPTION
5	1	501070-1	BDL, AIR SPLITTER - SINGLE S3 - 8 ZONE - NOVA

501076 (Substitute Items Below)

ITEM	QTY	PART NO.	DESCRIPTION
5	1	501071-1	BDL, AIR SPLITTER - DUAL S3 - 8 ZONE - NOVA

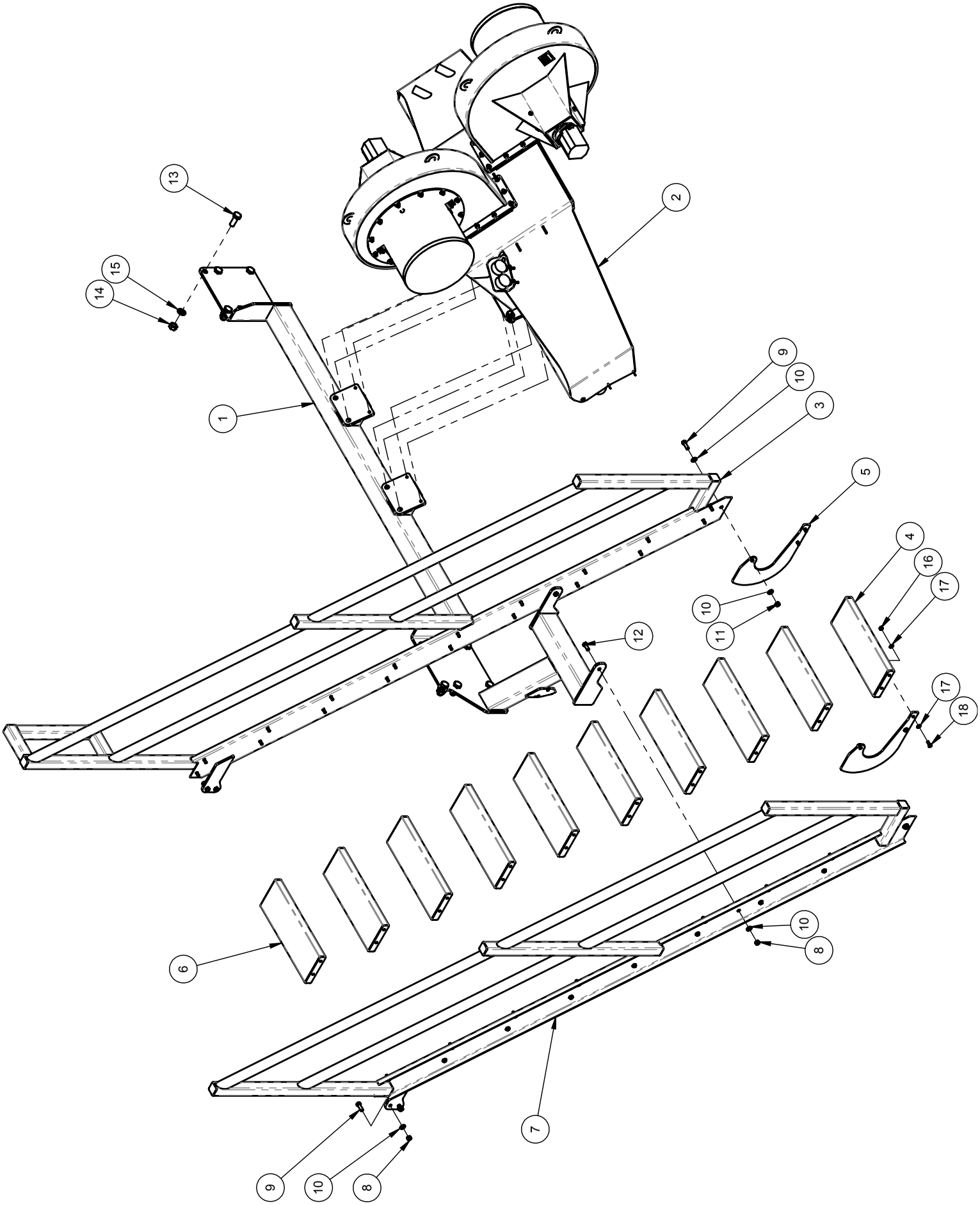
13
15
14
1
2
9
10
3
5
4
16
17
10
11
12
17
18
6
10
8
7
9
10
8

Parts Description:

Side Walkway – 630 T/B Nova

Part No. 503200

ITEM	QTY.	PART NO.	DESCRIPTION
1	1	503210	ASSY, PLATFORM - SIDE WALKWAY - T/B NOVA - BLK
2	1	500300-2	ASSY, MNT - REAR - SIDE WALK - NOVA - BLK
3	1	500290-2	ASSY, MOUNT - FRT - SIDE WALK - NOVA - BLK
4	2	500285	PLATE, FRMD 3/8 IN - BRACKET - SIDE WALKWAY - NOVA - BLK
5	1	503220	ASSY, HAND RAIL - RH - T/B NOVA - BLK
6	1	503235	ASSY, SIDE HAND RAIL - SIDE WALKWAY - T/B NOVA - BLK
7	1	500280-1	ASSY, HAND RAIL - SIDE WALK - NOVA - BLK
8	1	503230	ASSY, HAND RAIL LH - T/B NOVA - BLK
9	8	500792	STEP, SURE GRIP - 7 X 20 7/8 IN - GALV - NOVA
10	1	503240	ASSY, FRONT HANDRAIL - T/B NOVA - BLK
11	1	500785	ASSY, STEP - BETWEEN TANK STEP - NOVA - BLK
12	2	500790	PLATE, 1/4 IN - SIDE - REAR FLIP STEP - BLK
13	1	503205	ASSY, REAR MNT - SIDE WALKWAY - T/B NOVA
14	8	250104	BOLT, CARRIAGE - 1/2 X 1 1/2IN UNC GR5 PL
15	36	250453	NUT, HEX - 3/8 UNC PL
16	72	250557	WASHER, FLAT - 3/8 IN GR8 PL
17	36	250036	BOLT, HEX 3/8 X 1 IN GR5 PL
18	2	250013	BOLT, HEX 1/2 X 1 1/4 IN GR5 PL
19	6	250450	NUT, HEX 1/2 UNC GR5 PL
20	10	250555	WASHER, FLAT - 1/2 IN - GR8 - PL
21	5	250232	BOLT, U-SQ - 3/4 UNC X 12 ID X 10 IN - 2 IN THD - GR8 PL
22	10	250451	NUT, HEX 3/4 UNC GR5 PL
23	10	250552	WASHER, FLAT 3/4IN GR8 PL
24	8	250401	NUT, FLANGE - 1/2 UNC PL
25	10	250101	BOLT, CARRIAGE - 3/8 X 1 1/4 IN UNC GR5 PL
26	19	250400	NUT, FLANGE - 3/8 UNC PL
27	8	250019	BOLT, HEX 3/8 X 1 1/4 IN GR5 PL
28	6	250001	BOLT, HEX 1/2 X 1 1/2 IN GR5 PL
29	2	250504	NUT, LOCK - 1/2 UNC - STOVER - PL

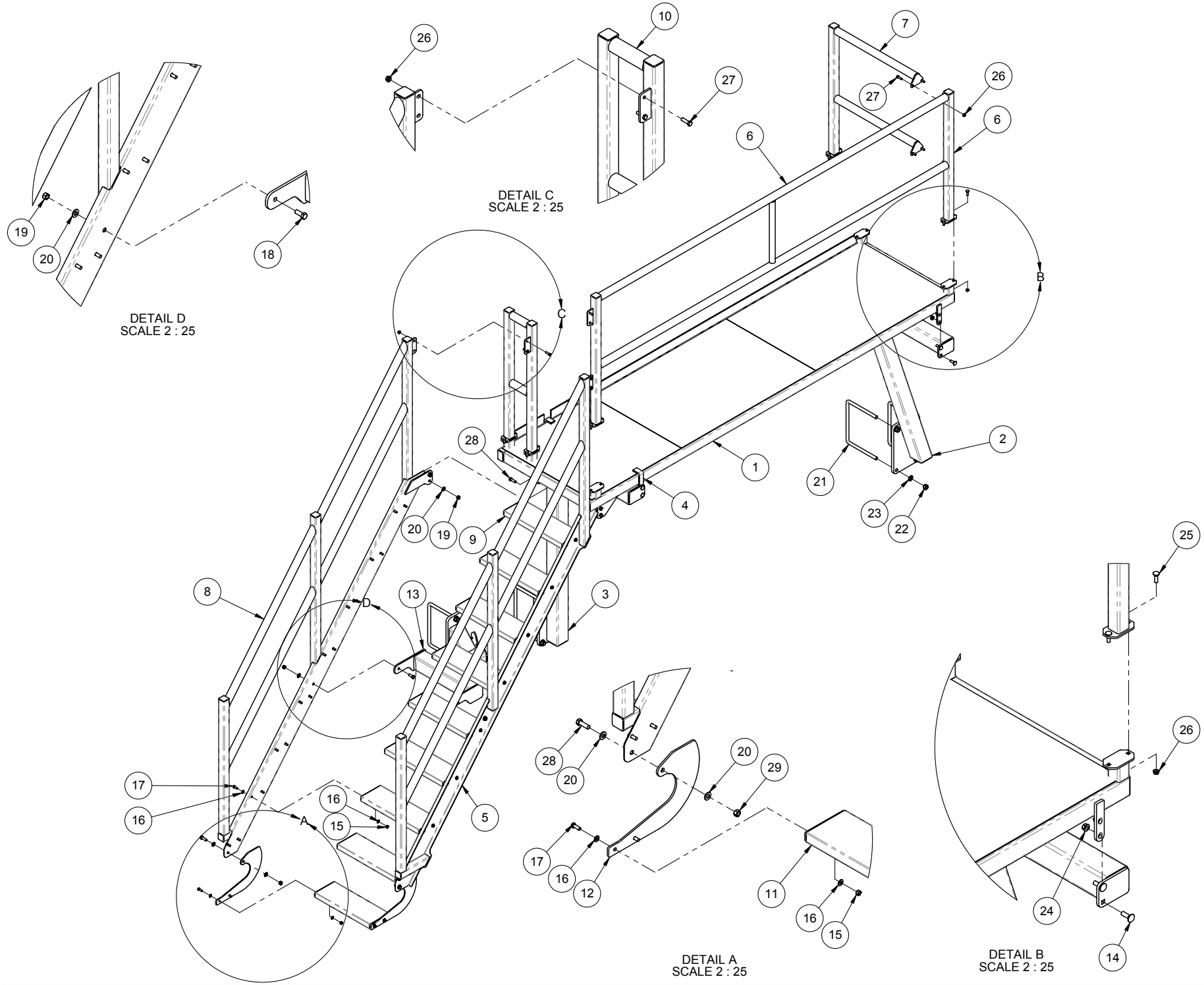
DETAIL C
SCALE 2 : 25
DETAIL D
SCALE 2 : 25
DETAIL A
SCALE 2 : 25
DETAIL B
SCALE 2 : 25
A
B
C
D
1
2
3
4
5
6
7
8
9
10
11
12
13
14
15
16
17
18
19
20
21
22
23
24
25
26
27
28
29

Parts Description:

Nova Y-Section Bundles

Main Tank

Part No. 500900 – Dual Shoot 10 Zone
500901 – Single Shoot 10 Zone
500870 – Dual Shoot 8 Zone
500871 – Single Shoot 8 Zone

Canola Tank

Part No. 500902 – Dual Shoot 10 Zone
500899 – Single Shoot 10 Zone
500872 – Dual Shoot 8 Zone
500873 – Single Shoot 8 Zone

500900

ITEM	QTY.	PART NO.	DESCRIPTION
1	1	500910-2	ASSY, Y-SECTION - DUAL SHOOT - NOVA - BLK
2	1	500927-1	PLATE, FRMD 1/4 IN - Y SECTION HANGER - LH - BLK
3	1	500928-1	PLATE, FRMD 1/4 IN - Y SECTION HANGER - LH - BLK
4	4	250001	BOLT, HEX 1/2 X 1 1/2 IN GR5 PL
5	4	250555	WASHER, FLAT - 1/2 IN - GR8 - PL
6	4	250450	NUT, HEX 1/2 UNC GR5 PL
7	4	250100	BOLT, CARRIAGE - 3/8 X 1 1/2IN UND GR5 PL
8	4	250557	WASHER, FLAT - 3/8 IN GR8 PL
9	4	250453	NUT, HEX - 3/8 UNC PL
10	10	255912	PLUG, AIR - 2IN PIPE - GRIPPER

500901 (Substitute Items Below)

ITEM	QTY	PART NO.	DESCRIPTION
1	1	500915-1	ASSY, Y-SECTION - SINGLE SHOOT - NOVA - BLK

500870 (Substitute Items Below)

ITEM	QTY	PART NO.	DESCRIPTION
1	1	500882-1	ASSY, Y-SECTION - DUAL SHOOT - 8 ZONE - NOVA - BLK

500871 (Substitute Items Below)

ITEM	QTY	PART NO.	DESCRIPTION
1	1	500880	ASSY, Y-SECTION - SINGLE SHOOT - 8 ZONE - NOVA - BLK

500902

ITEM	QTY.	PART NO.	DESCRIPTION
1	1	500917-2	ASSY, Y-SECTION - CANOLA TANK - NOVA - BLK
2	2	500921-1	PLATE, FRMD 1/4IN - Y-SECTION HANGER - CANOLA T
3	4	250001	BOLT, HEX 1/2 X 1 1/2 IN GR5 PL
4	8	250555	WASHER, FLAT - 1/2 IN - GR8 - PL
5	8	250450	NUT, HEX 1/2 UNC GR5 PL
6	2	250213	BOLT, U-SQ - 1/2 UNC X 4 ID X 5 IN - 2 IN THD - GR8 PL

500899 (Substitute Items Below)

ITEM	QTY	PART NO.	DESCRIPTION
1	1	500915-1	ASSY, Y-SECTION - SINGLE SHOOT - NOVA - BLK

500872 (Substitute Items Below)

ITEM	QTY	PART NO.	DESCRIPTION
1	1	500884-1	ASSY, Y-SECTION - CANOLA TANK - DUAL SHOOT - 8 ZONE - NOVA - BLK

500873 (Substitute Items Below)

ITEM	QTY	PART NO.	DESCRIPTION
1	1	500880	ASSY, Y-SECTION - SINGLE SHOOT - 8 ZONE - NOVA - BLK

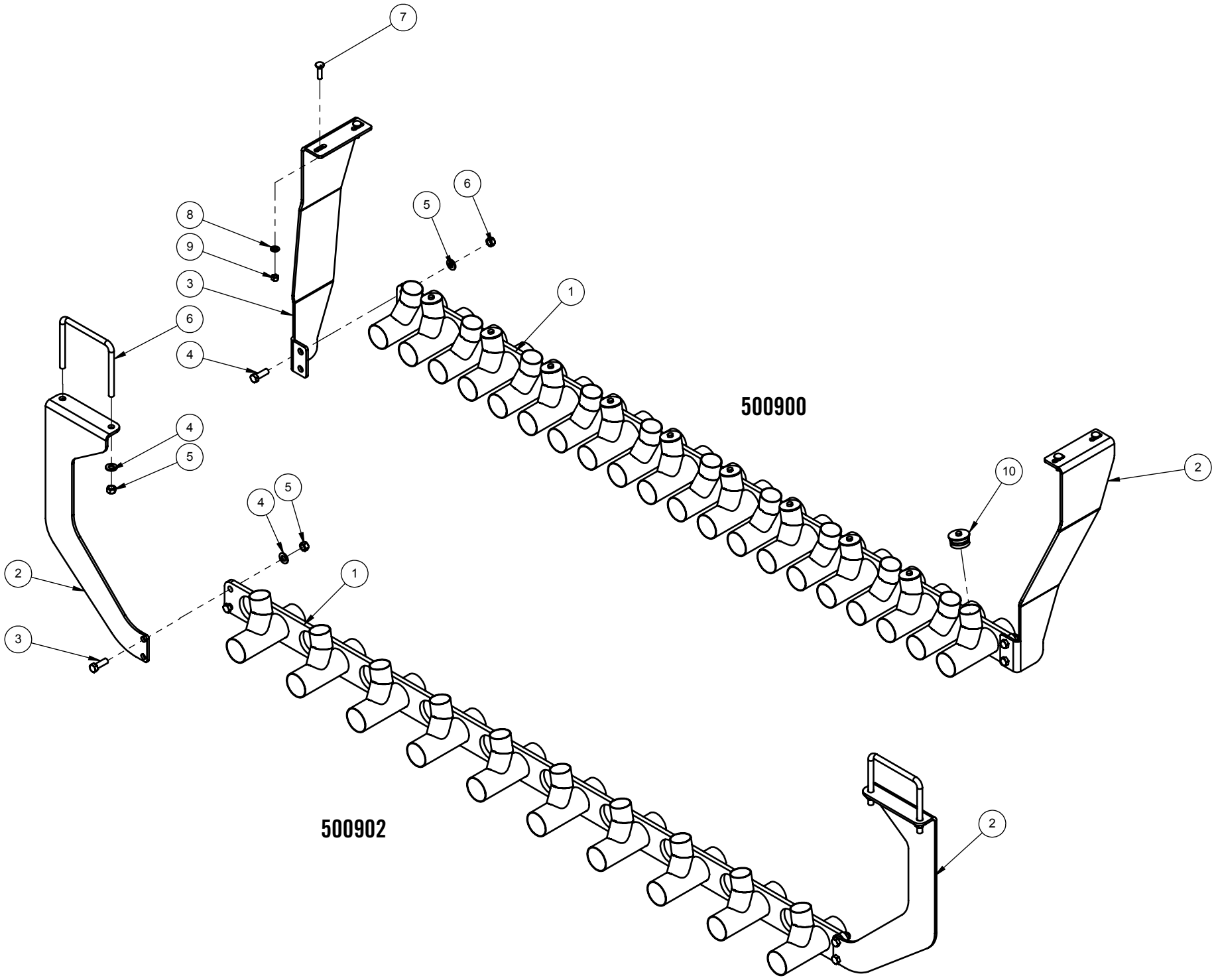
7
8
9
3
6
4
5
6
1
500900
4
5
10
2
4
5
2
1
3
500902
2

Parts Description:

T/B Nova Y-Section Bundles

Main Tank

Part No. 503425 – Dual Shoot 10 Zone
503515 – Single Shoot 10 Zone
503350 – Dual Shoot 8 Zone
503525 – Single Shoot 8 Zone

110BU Tank

Part No. 503370 – Dual Shoot 10 Zone
503520 – Single Shoot 10 Zone
503430 – Dual Shoot 8 Zone
503530 – Single Shoot 8 Zone

503425

ITEM	QTY.	PART NO.	DESCRIPTION
1	1	500910-2	ASSY, Y-SECTION - DUAL SHOOT - NOVA - BLK
2	1	503356	PLATE, FRMD 1/4 IN - Y SECTION HANGER - RH - T/B NOVA - BLK
3	1	503357	PLATE, FRMD 1/4 IN - Y SECTION HANGER - LH - T/B NOVA - BLK
4	4	250001	BOLT, HEX 1/2 X 1 1/2 IN GR5 PL
5	4	250450	NUT, HEX 1/2 UNC GR5 PL
6	4	250555	WASHER, FLAT - 1/2 IN - GR8 - PL
7	4	250100	BOLT, CARRIAGE - 3/8 X 1 1/2IN UND GR5 PL
8	4	250557	WASHER, FLAT - 3/8 IN GR8 PL
9	4	250453	NUT, HEX - 3/8 UNC PL
10	10	255912	PLUG, AIR - 2IN PIPE - GRIPPER

503515 (Substitute Items Below)

ITEM	QTY	PART NO.	DESCRIPTION
1	1	500915-1	ASSY, Y-SECTION - SINGLE SHOOT - NOVA - BLK

503350 (Substitute Items Below)

ITEM	QTY	PART NO.	DESCRIPTION
1	1	500882-1	ASSY, Y-SECTION - DUAL SHOOT - 8 ZONE - NOVA - BLK

503525 (Substitute Items Below)

ITEM	QTY	PART NO.	DESCRIPTION
1	1	500880	ASSY, Y-SECTION - SINGLE SHOOT - 8 ZONE - NOVA - BLK

503370

ITEM	QTY.	PART NO.	DESCRIPTION
1	1	500910-2	ASSY, Y-SECTION - DUAL SHOOT - NOVA - BLK
2	1	503380	ASSY, Y SECTION HANGER - 110BU TANK - T/B NOVA
3	1	503382	PLATE, FRMD 1/4 IN-R.H.-Y-SECTION HANGER-110BU TANK-T/B NOVA-BLK
4	4	250001	BOLT, HEX 1/2 X 1 1/2 IN GR5 PL
5	4	250450	NUT, HEX 1/2 UNC GR5 PL
6	4	250555	WASHER, FLAT - 1/2 IN - GR8 - PL
7	4	250100	BOLT, CARRIAGE - 3/8 X 1 1/2IN UND GR5 PL
8	4	250453	NUT, HEX - 3/8 UNC PL
9	4	250557	WASHER, FLAT - 3/8 IN GR8 PL
10	10	255912	PLUG, AIR - 2IN PIPE - GRIPPER

503520 (Substitute Items Below)

ITEM	QTY	PART NO.	DESCRIPTION
1	1	500915-1	ASSY, Y-SECTION - SINGLE SHOOT - NOVA - BLK

503430 (Substitute Items Below)

ITEM	QTY	PART NO.	DESCRIPTION
1	1	500882-1	ASSY, Y-SECTION - DUAL SHOOT - 8 ZONE - NOVA - BLK

503530 (Substitute Items Below)

ITEM	QTY	PART NO.	DESCRIPTION
1	1	500880	ASSY, Y-SECTION - SINGLE SHOOT - 8 ZONE - NOVA - BLK

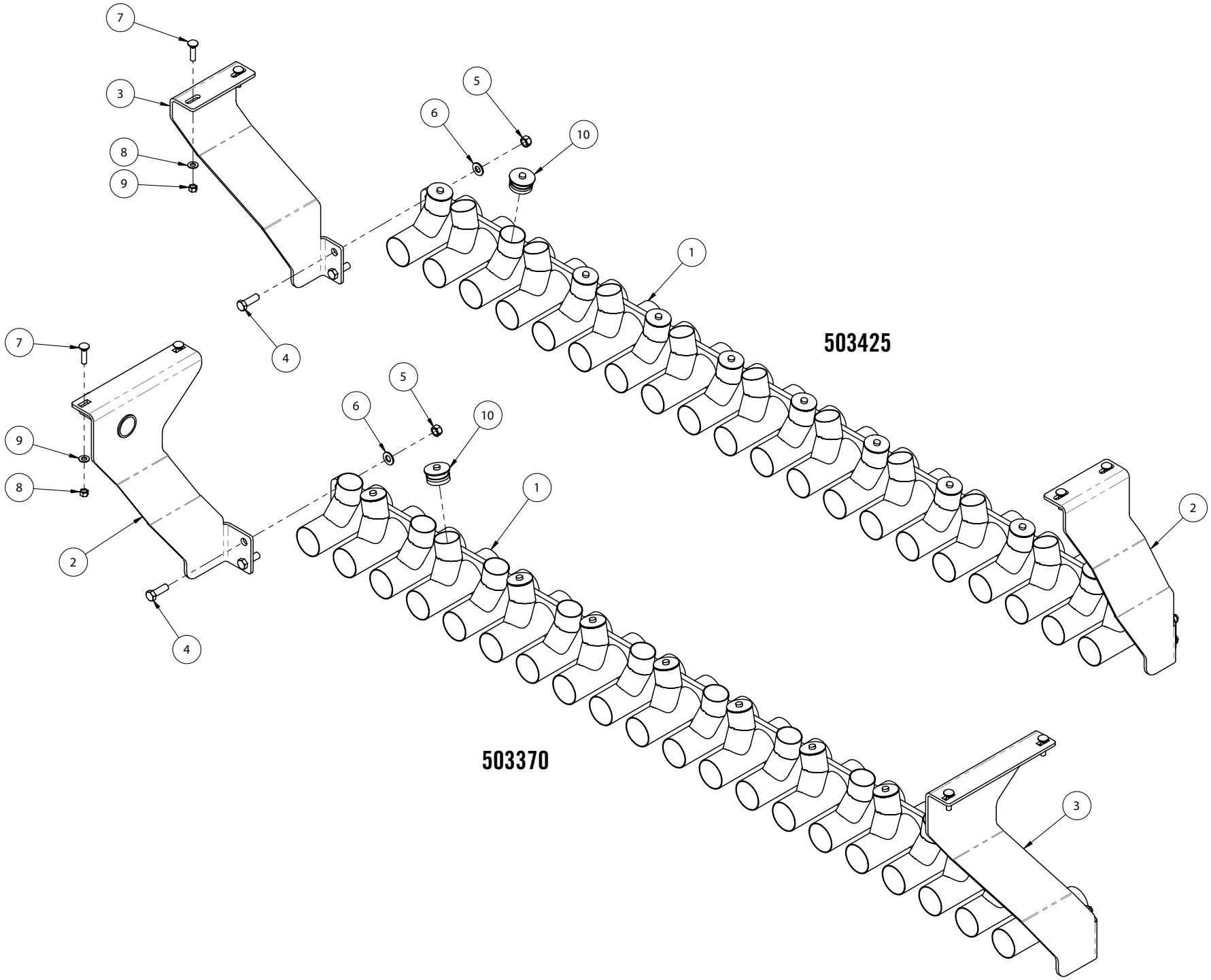
503425
503370
1
2
3
4
5
6
7
8
9
10

Parts Description:

28FT Conveyor 780/820 Nova

Part No. 501100-1

ITEM	QTY.	PART NO.	DESCRIPTION
1	1	259800	CONVEYOR, CONVEYALL - TCP1628
2	1	501110-4	ASSY, MAIN MOUNT - LONG CONVEYOR - NOVA - BLK
3	1	501135-2	ASSY, MAIN ARM - LONG CONVEYOR MOUNT - NOVA - BLK
4	1	501160-1	ASSY, SECOND ARM - LONG CONVEYOR MOUNT - NOVA - BLK
5	1	501175-1	ASSY, PIVOT MOUNT - LONG CONVEYOR
6	1	501205-3	ASSY, BUMP STOP - LONG CONVEYOR - BLK
7	1	501220	BDL, CONVEYOR CONTROL BOX - NOVA
8	1	501360	ASSY, BTM REST MNT - LONG CONVEYOR - BLK
9	1	501210-3	ASSY - CONVEYOR CONTROL VALVE MOUNT
10	1	501215-2	ASSY, CONVEYOR TILT PIN
11	4	501185	ASSY, CONVEYOR MOUNT PIVOT PIN
12	1	501209-1	PLATE, FRMD 1/4 IN - BUMPER HOLDER
13	1	501114-4	PLATE, FRMD 1/4 IN - BTM BUMPER HOLDER - LONG CONVEYOR - BLK
14	1	501726	SHEET, FRMD 10 GA - CONTROLLER HOLDER - CONVEYOR - BLK
15	1	501198-1	PLATE, FRMD 1/4 IN - HYD. VALVE MNT - NOVA
16	1	258565	WINCH, CABLE - 1400LBS
17	1	258320	MANIFOLD, HYD - 3 VALVE - CONVEYOR ARM CONTROL
18	2	259850	RUBBER BUMPER, NOVA CONVEYOR
19	1	259851	UHMW BUMPER 3/4 IN, NOVA CONVEYOR
20	1	501178	PAD, WEAR 1/4 IN - UHMW - CONVEYOR PIVOT
21	2	258510	CYL, HYD 3 X 24 IN
22	1	258550	CYL, HYD 2 1/2 X 8 IN
23	8	258393	HOSE CLAMP - 2 HALVES - 3/8" HOSE - CLH-T-3075-PP
24	7	258392	HOSE CLAMP - COVER PLATE - TCP-3
25	5	258394	HOSE CLAMP - 2 HALVES - 3/4" HOSE - 428,5 / 28,5 PAH
26	5	258396	HOSE CLAMP - COVER PLATE - GD4DW3
27	5	501225-1	PLATE, FRMD 12 GA - 3/4 IN HYD HOSE CLAMP
28	4	250601	BUSH, 1 1/2OD X 1 1/4ID X 7/8 IN - CONNEX
29	2	400234-1	WASHER, TRIP 1/4 IN - UHMW
30	4	250050	BOLT, HEX 1/2 X 3 1/2 IN UNC GR5 PL
31	4	250504	NUT, LOCK - 1/2 UNC - STOVER - PL
32	9	250555	WASHER, FLAT - 1/2 IN - GR8 - PL
33	9	250450	NUT, HEX 1/2 UNC GR5 PL
34	9	250232	BOLT, U-SQ - 3/4 UNC X 12 ID X 10 IN - 2 IN THD - GR8 PL
35	18	250451	NUT, HEX 3/4 UNC GR5 PL
36	18	250552	WASHER, FLAT 3/4IN GR8 PL
37	4	250038	BOLT, HEX 5/16 X 1 1/4 IN GR5 PL
38	7	250460	NUT, HEX - 5/16 UNC PL
39	7	250558	WASHER, FLAT - 5/16 IN - GR8 PL
40	5	250036	BOLT, HEX 3/8 X 1 IN GR5 PL
41	19	250557	WASHER, FLAT - 3/8 IN GR8 PL
42	14	250453	NUT, HEX - 3/8 UNC PL
43	2	250047	BOLT, HEX 5/8 X 2 UNC GR5 PL
44	2	250455	NUT, HEX 5/8 UNC GR5 PL
45	2	250550	WASHER, FLAT 5/8 IN GR8 PL
46	4	250001	BOLT, HEX 1/2 X 1 1/2 IN GR5 PL
47	6	250019	BOLT, HEX 3/8 X 1 1/4 IN GR5 PL
48	1	250013	BOLT, HEX 1/2 X 1 1/4 IN GR5 PL
49	3	250071	BOLT, HEX 3/8 X 1 1/2 IN GR5 PL
50	6	250063	BOLT, HEX 5/16 X 1 3/4 UNC GR5 PL
51	5	250073	BOLT, HEX 5/16 X 2 UNC GR5 PL
52	1	250097	BOLT, HEX 5/16 X 3 1/4 UNC GR5 PL
53	1	250039	BOLT, HEX 3/8 X 2 IN GR5 PL
54	1	250503	NUT, LOCK - 3/8 UNC - STOVER - PL
55	3	250084	BOLT, HEX 5/16 X 2 1/2 UNC GR5 PL
56	2	250218	BOLT, U-SQ - 1/2 UNC X 4 ID X 8 IN - 2 IN THD - GR5 PL

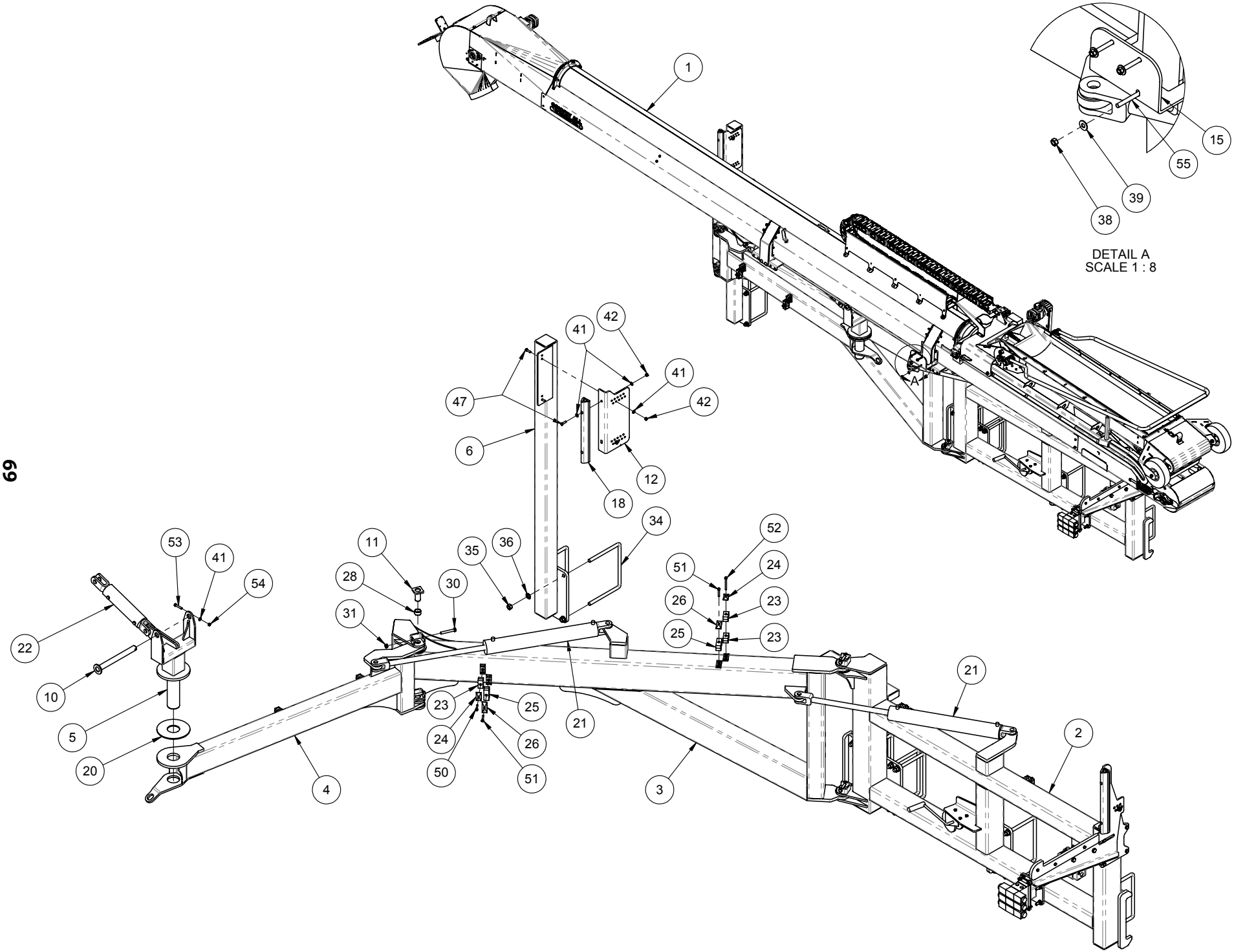
1
15
55
39
38
DETAIL A
SCALE 1 : 8
A
42
41
41
42
47
6
12
18
34
52
24
23
23
51
26
25
53
41
54
22
10
5
20
11
28
30
31
35
36
21
23
25
24
26
50
51
4
3
21
2

Parts Description:

28FT Conveyer 780/820 Nova Main Mount

Part No. 501100-1

ITEM	QTY.	PART NO.	DESCRIPTION
1	1	501110-4	ASSY, MAIN MOUNT - LONG CONVEYOR - NOVA - BLK
2	1	501220	BDL, CONVEYOR CONTROL BOX - NOVA
3	1	501360	ASSY, BTM REST MNT - LONG CONVEYOR - BLK
4	1	501210-3	ASSY - CONVEYOR CONTROL VALVE MOUNT
5	2	501185	ASSY, CONVEYOR MOUNT PIVOT PIN
6	1	501114-4	PLATE, FRMD 1/4 IN - BTM BUMPER HOLDER - LON
7	1	501726	SHEET, FRMD 10 GA - CONTROLLER HOLDER - CO
8	1	258565	WINCH, CABLE - 1400LBS
9	1	258320	MANIFOLD, HYD - 3 VALVE - CONVEYOR ARM CONTROL
10	1	259850	RUBBER BUMPER, NOVA CONVEYOR
11	1	259851	UHMW BUMPER 3/4 IN, NOVA CONVEYOR
12	1	258394	HOSE CLAMP - 2 HALVES - 3/4" HOSE - 428,5 / 28,5 PAH
13	1	258396	HOSE CLAMP - COVER PLATE - GD4DW3
14	3	258393	HOSE CLAMP - 2 HALVES - 3/8" HOSE - CLH-T-3075-PP
15	3	258392	HOSE CLAMP - COVER PLATE - TCP-3
16	9	250555	WASHER, FLAT - 1/2 IN - GR8 - PL
17	9	250450	NUT, HEX 1/2 UNC GR5 PL
18	7	250232	BOLT, U-SQ - 3/4 UNC X 12 ID X 10 IN - 2 IN THD - GR
19	14	250451	NUT, HEX 3/4 UNC GR5 PL
20	14	250552	WASHER, FLAT 3/4IN GR8 PL
21	4	250038	BOLT, HEX 5/16 X 1 1/4 IN GR5 PL
22	4	250460	NUT, HEX - 5/16 UNC PL
23	4	250558	WASHER, FLAT - 5/16 IN - GR8 PL
24	5	250036	BOLT, HEX 3/8 X 1 IN GR5 PL
25	12	250557	WASHER, FLAT - 3/8 IN GR8 PL
26	10	250453	NUT, HEX - 3/8 UNC PL
27	2	250047	BOLT, HEX 5/8 X 2 UNC GR5 PL
28	2	250455	NUT, HEX 5/8 UNC GR5 PL
29	2	250550	WASHER, FLAT 5/8 IN GR8 PL
30	4	250001	BOLT, HEX 1/2 X 1 1/2 IN GR5 PL
31	2	250019	BOLT, HEX 3/8 X 1 1/4 IN GR5 PL
32	1	250013	BOLT, HEX 1/2 X 1 1/4 IN GR5 PL
33	2	250601	BUSH, 1 1/2OD X 1 1/4ID X 7/8 IN - CONNEX
34	1	400234-1	WASHER, TRIP 1/4 IN - UHMW
35	2	250050	BOLT, HEX 1/2 X 3 1/2 IN UNC GR5 PL
36	2	250504	NUT, LOCK - 1/2 UNC - STOVER - PL
37	3	250071	BOLT, HEX 3/8 X 1 1/2 IN GR5 PL
38	3	250063	BOLT, HEX 5/16 X 1 3/4 UNC GR5 PL
39	1	250073	BOLT, HEX 5/16 X 2 UNC GR5 PL
40	2	250218	BOLT, U-SQ - 1/2 UNC X 4 ID X 8 IN - 2 IN THD - GR5 PL

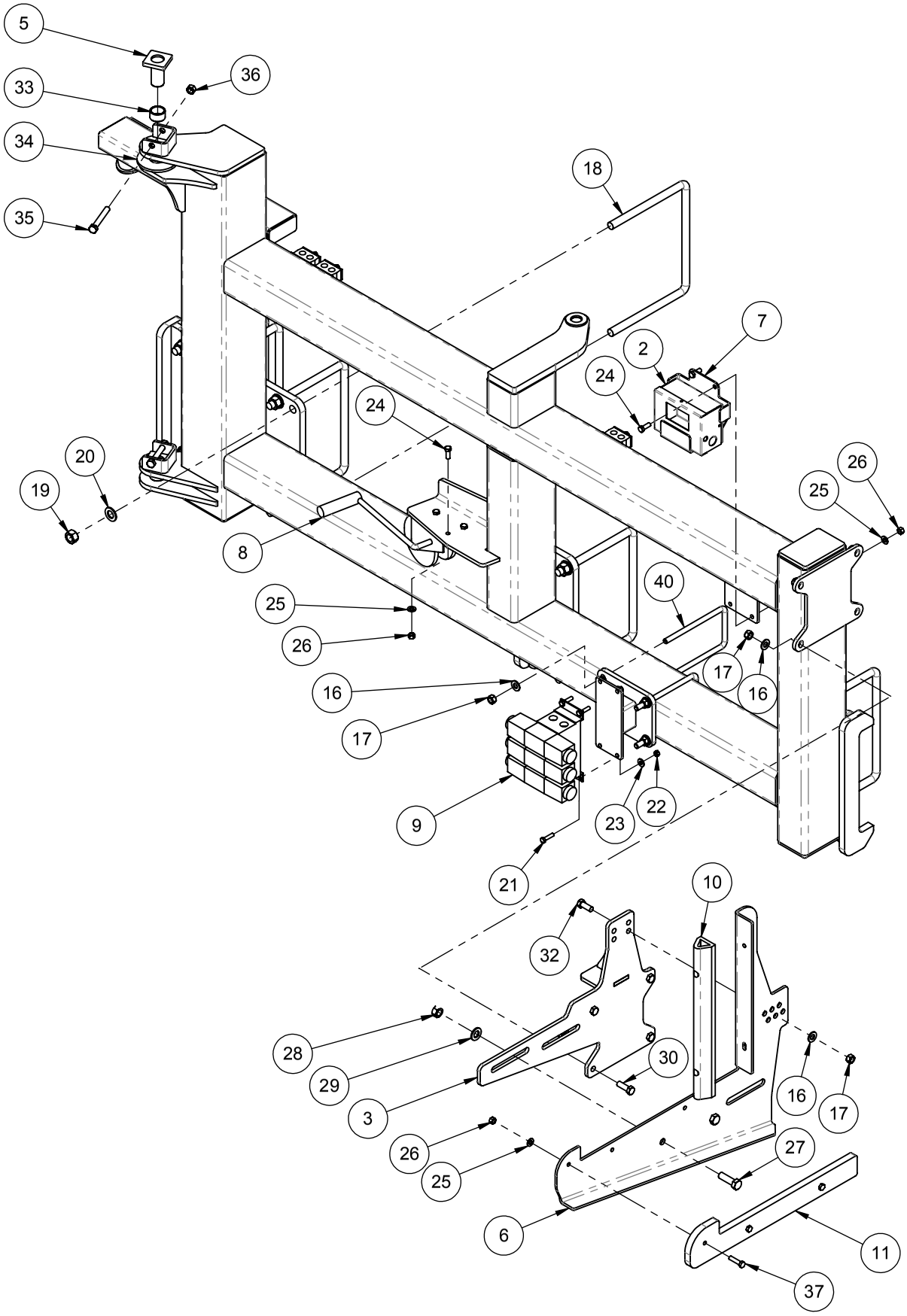
5
36
33
34
35
18
7
2
24
24
20
19
26
25
8
40
25
26
17
16
16
17
9
23
22
21
10
32
28
29
30
3
16
17
26
25
27
6
11
37

Parts Description:

25FT Conveyor 520/560/630 Nova

Part No. 501700-1

ITEM	QTY.	PART NO.	DESCRIPTION
1	1		CONVEYOR, CONVEYALL - TCP1625 - BLK
2	1	501710-1	ASSY, MAIN MOUNT - SHORT CONVEYOR - NOVA - BLK
3	1	501730-1	ASSY, MAIN ARM - SHORT CONVEYOR MNT - NOVA - BLK
4	1	501740-1	ASSY, SECOND ARM - SHORT CONVEYOR MNT - NOVA - BLK
5	1	501750-1	ASSY, PIVOT MOUNT - SHORT CONVEYOR - BLK
6	1	501760-1	ASSY, BUMP STOP - SHORT CONVEYOR - BLK
7	1	501220	BDL, CONVEYOR CONTROL BOX - NOVA
8	1	501775	ASSY, BTM REST MNT - SHORT CONVEYOR - BLK
9	1	501215-2	ASSY, CONVEYOR TILT PIN
10	4	501185	ASSY, CONVEYOR MOUNT PIVOT PIN
11	1	501765-1	PLATE, FRMD 1/4 IN - BUMPER HOLDER - SHORT CONVEYOR - BLK
12	1	501725-1	PLATE, FRMD 1/4 IN - BTM BUMPER REST - SHORT CONVEYOR - BLK
13	1	501726	SHEET, FRMD 10 GA - CONTROLLER HOLDER - CONVEYOR - BLK
14	1	501198-1	PLATE, FRMD 1/4 IN - HYD. VALVE MNT - NOVA
15	1	501746-1	SHEET, FRMD 10 GA - HOSE GUARD - SHORT CONVEYOR MNT- BLK
16	1	501747	PLATE, 1/4 IN - PIVOT WASHER - 25 FT CONVEYOR - BLK
17	1	258565	WINCH, CABLE - 1400LBS
18	1	258320	MANIFOLD, HYD - 3 VALVE - CONVEYOR ARM CONTROL
19	2	259850	RUBBER BUMPER, NOVA CONVEYOR
20	1	259852	UHMW BUMPER 3/4 IN, 25 FT CONVEYOR - BLACK
21	1	501178	PAD, WEAR 1/4 IN - UHMW - CONVEYOR PIVOT
22	2	258510	CYL, HYD 3 X 24 IN
23	1	258550	CYL, HYD 2 1/2 X 8 IN
24	4	258394	HOSE CLAMP - 2 HALVES - 3/4" HOSE - 428,5 / 28,5 PAH
25	4	258396	HOSE CLAMP - COVER PLATE - GD4DW3
26	8	258393	HOSE CLAMP - 2 HALVES - 3/8" HOSE - CLH-T-3075-PP
27	7	258392	HOSE CLAMP - COVER PLATE - TCP-3
28	4	250601	BUSH, 1 1/2OD X 1 1/4ID X 7/8 IN - CONNEX
29	2	400234-1	WASHER, TRIP 1/4 IN - UHMW
30	1	250503	NUT, LOCK - 3/8 UNC - STOVER - PL
31	4	250050	BOLT, HEX 1/2 X 3 1/2 IN UNC GR5 PL
32	4	250504	NUT, LOCK - 1/2 UNC - STOVER - PL
33	5	250036	BOLT, HEX 3/8 X 1 IN GR5 PL
34	14	250453	NUT, HEX - 3/8 UNC PL
35	19	250557	WASHER, FLAT - 3/8 IN GR8 PL
36	1	250039	BOLT, HEX 3/8 X 2 IN GR5 PL
37	3	250658	SCREW, SELF THREAD - 1/4 X 1 IN
38	4	250073	BOLT, HEX 5/16 X 2 UNC GR5 PL
39	6	250063	BOLT, HEX 5/16 X 1 3/4 UNC GR5 PL
40	1	250097	BOLT, HEX 5/16 X 3 1/4 UNC GR5 PL
41	6	250019	BOLT, HEX 3/8 X 1 1/4 IN GR5 PL
42	8	250232	BOLT, U-SQ - 3/4 UNC X 12 ID X 10 IN - 2 IN THD - GR8 PL
43	16	250451	NUT, HEX 3/4 UNC GR5 PL
44	16	250552	WASHER, FLAT 3/4IN GR8 PL
45	3	250071	BOLT, HEX 3/8 X 1 1/2 IN GR5 PL
46	2	250047	BOLT, HEX 5/8 X 2 UNC GR5 PL
47	2	250550	WASHER, FLAT 5/8 IN GR8 PL
48	2	250455	NUT, HEX 5/8 UNC GR5 PL
49	5	250555	WASHER, FLAT - 1/2 IN - GR8 - PL
50	5	250450	NUT, HEX 1/2 UNC GR5 PL
51	4	250001	BOLT, HEX 1/2 X 1 1/2 IN GR5 PL
52	1	250013	BOLT, HEX 1/2 X 1 1/4 IN GR5 PL
53	4	250038	BOLT, HEX 5/16 X 1 1/4 IN GR5 PL
54	7	250460	NUT, HEX - 5/16 UNC PL
55	7	250558	WASHER, FLAT - 5/16 IN - GR8 PL
56	3	250084	BOLT, HEX 5/16 X 2 1/2 UNC GR5 PL
57	1	250621	PIN, COILED SPRING - 1/4 X 3 1/2 IN - PL

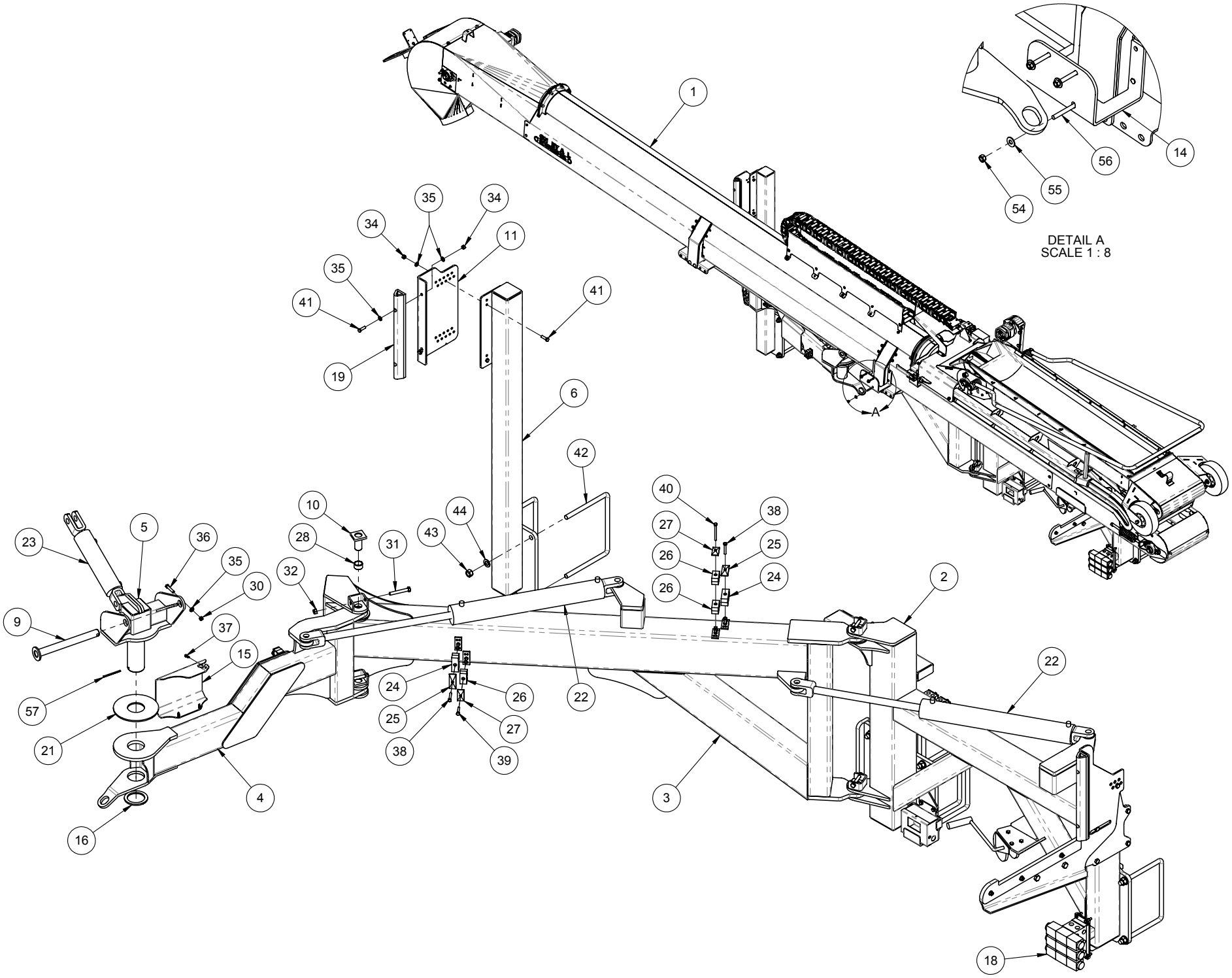
DETAIL A
SCALE 1 : 8
A
1
2
3
4
5
6
9
10
11
14
15
16
18
19
21
22
23
24
25
26
27
28
30
31
32
34
35
36
37
38
39
40
41
42
43
44
54
55
56
57

ITEM	QTY.	PART NO.	DESCRIPTION
1	1	501710-1	ASSY, MAIN MOUNT - SHORT CONVEYOR - NOVA - BLK
2	1	501220	BDL, CONVEYOR CONTROL BOX - NOVA
3	1	501775	ASSY, BTM REST MNT - SHORT CONVEYOR - BLK
4	2	501185	ASSY, CONVEYOR MOUNT PIVOT PIN
5	1	501725-1	PLATE, FRMD 1/4 IN - BTM BUMPER REST - SHORT C
6	1	501726	SHEET, FRMD 10 GA - CONTROLLER HOLDER - CON
7	1	258565	WINCH, CABLE - 1400LBS
8	1	258320	MANIFOLD, HYD - 3 VALVE - CONVEYOR ARM CONTROL
9	1	259850	RUBBER BUMPER, NOVA CONVEYOR
10	1	259852	UHMW BUMPER 3/4 IN, 25 FT CONVEYOR - BLACK
11	1	258394	HOSE CLAMP - 2 HALVES - 3/4" HOSE - 428,5 / 28,5 PAH
12	1	258396	HOSE CLAMP - COVER PLATE - GD4DW3
13	3	258393	HOSE CLAMP - 2 HALVES - 3/8" HOSE - CLH-T-3075-PP
14	3	258392	HOSE CLAMP - COVER PLATE - TCP-3
15	2	250601	BUSH, 1 1/2OD X 1 1/4ID X 7/8 IN - CONNEX
16	1	400234-1	WASHER, TRIP 1/4 IN - UHMW
17	5	250036	BOLT, HEX 3/8 X 1 IN GR5 PL
18	10	250453	NUT, HEX - 3/8 UNC PL
19	12	250557	WASHER, FLAT - 3/8 IN GR8 PL
20	1	250073	BOLT, HEX 5/16 X 2 UNC GR5 PL
21	3	250063	BOLT, HEX 5/16 X 1 3/4 UNC GR5 PL
22	2	250050	BOLT, HEX 1/2 X 3 1/2 IN UNC GR5 PL
23	2	250504	NUT, LOCK - 1/2 UNC - STOVER - PL
24	6	250232	BOLT, U-SQ - 3/4 UNC X 12 ID X 10 IN - 2 IN THD - GR8 PL
25	12	250451	NUT, HEX 3/4 UNC GR5 PL
26	12	250552	WASHER, FLAT 3/4IN GR8 PL
27	3	250071	BOLT, HEX 3/8 X 1 1/2 IN GR5 PL
28	2	250047	BOLT, HEX 5/8 X 2 UNC GR5 PL
29	2	250550	WASHER, FLAT 5/8 IN GR8 PL
30	2	250455	NUT, HEX 5/8 UNC GR5 PL
31	5	250555	WASHER, FLAT - 1/2 IN - GR8 - PL
32	5	250450	NUT, HEX 1/2 UNC GR5 PL
33	4	250001	BOLT, HEX 1/2 X 1 1/2 IN GR5 PL
34	1	250013	BOLT, HEX 1/2 X 1 1/4 IN GR5 PL
35	2	250019	BOLT, HEX 3/8 X 1 1/4 IN GR5 PL
36	4	250038	BOLT, HEX 5/16 X 1 1/4 IN GR5 PL
37	4	250460	NUT, HEX - 5/16 UNC PL
38	4	250558	WASHER, FLAT - 5/16 IN - GR8 PL

Parts Description:

25FT Conveyer 520/560/630 Nova Main Mount

Part No. 501700-1

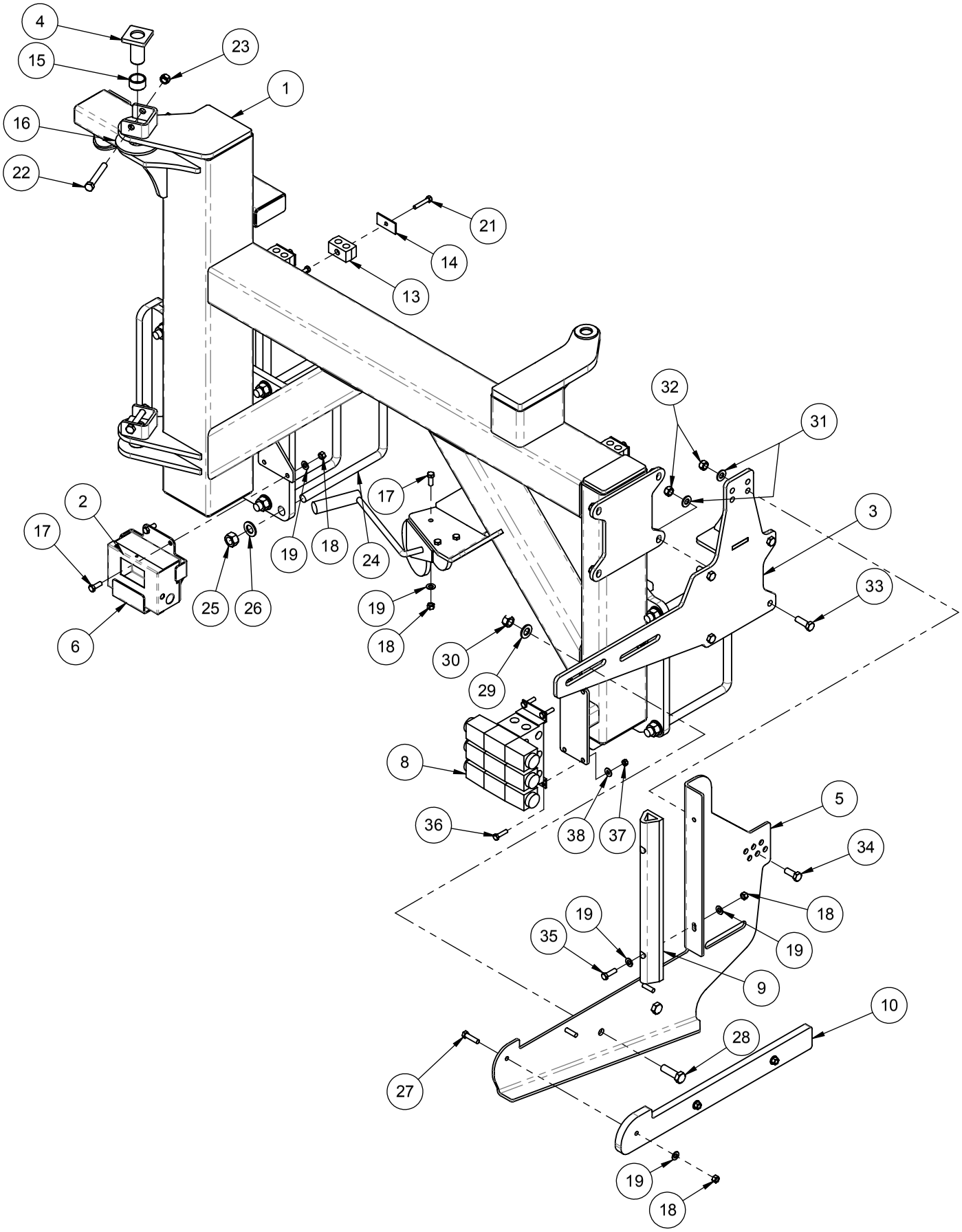
4
23
15
1
16
22
21
14
13
32
31
17
2
3
17
19
18
24
33
25
26
19
6
18
30
29
8
5
36
38
37
34
18
19
35
19
9
10
28
27
19
18

Parts Description: Hydraulic Schematic

Meter Drive

Part No. 401228-3

ITEM	PART NO.	QTY	DESCRIPTION
1	258347	2	HOSE, 1/2-2WB X 252LOA - 08JIC F-SW X 08JIC F-SW
2	258154	1	HOSE, 3/8-2WB X 31 LOA - 06 JIC F-SW X 08 JIC F-SW
3	258141	2	HOSE, 3/8-2WB X 30 1/2 IN - 06JIC F-SW X 06JIC F-SW
4	258238	2	HOSE, 3/8-2WB X 120 LOA - 06 JIC F-SW X 08 JIC F-SW
5	258239	1	HOSE, 3/8-2WB X 55 LOA - 06 JIC F-SW X 08 JIC F-SW
6	258002	4	ELBOW, 90D - 06 ORB M X 06 JIC M
7	258051	2	CONNECTOR, 06 ORB M X 06 JIC M
8	258005	2	EL, 90D - 06 JIC M X 06 JIC F-SW
9	258053	2	CONNECTOR, 08 ORB M X 06 JIC M
10	258028	2	TEE, 08 JIC M X M X M
11	258057	2	CONNECTOR, 1/2 NPT M X 08 JIC M
12	258070	1	COUPLER, MALE - PIONEER - 1/2 NPT F
13	258071	1	COUPLER, MALE - NON-VALVED - 1/2 NPT F
14	258041	2	PLUG, 06 ORB M
15	258038	2	CONNECTOR, 06 JIC F-SW X 1/4 NPT F
16	258025	2	TEE, 06 JIC F-SW X 06 JIC M X 06 JIC M - RUN
A	258094	2	GAUGE, PRESSURE - SPG - 1500P 1/4 NPT
B	260718	2	VALVE, PWM - OMNISEED - C/W MANIFOLD - RAVEN
C	260717	2	MOTOR, HYD - OMNISEED - 7/8 HEX - RAVEN

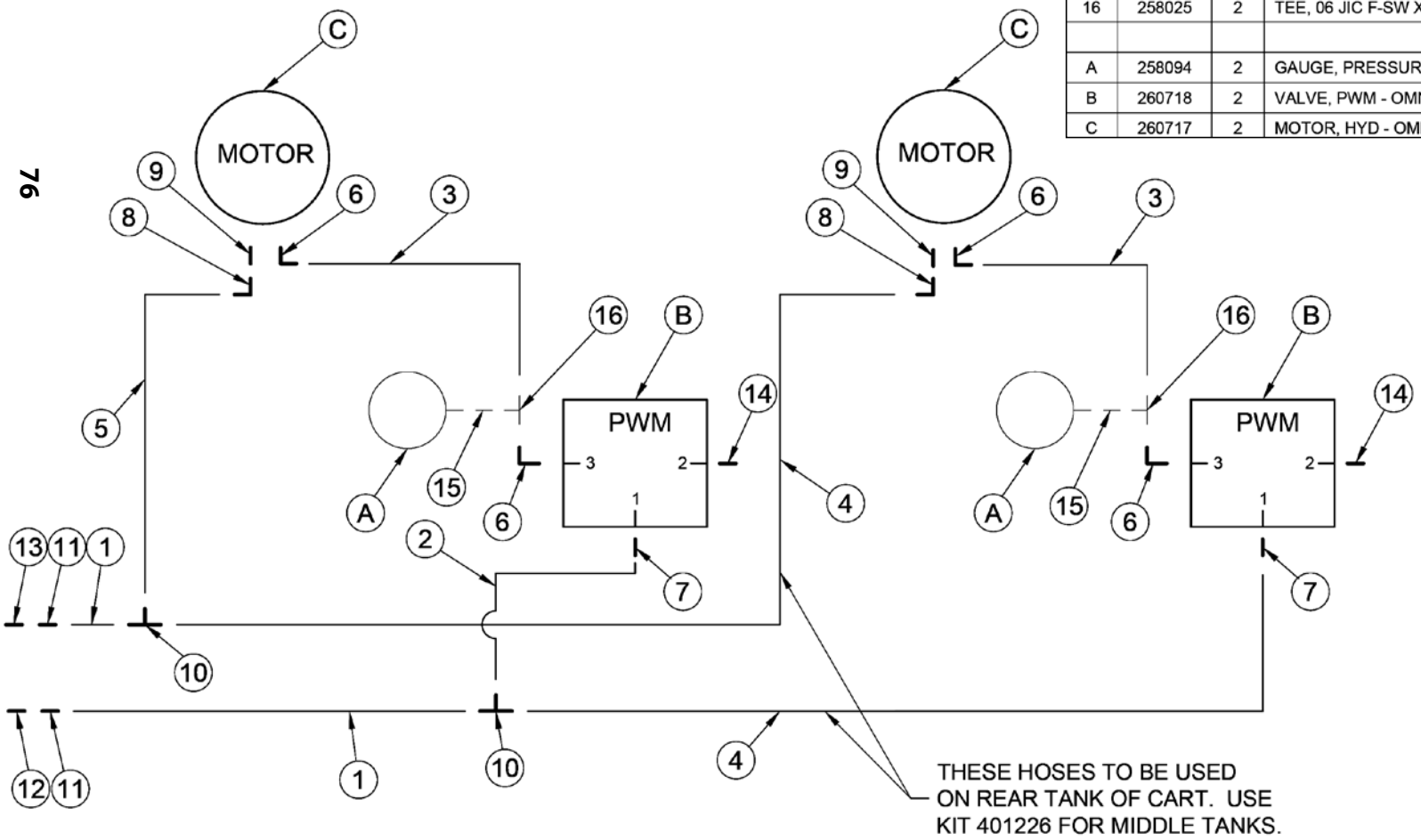

Parts Description: Hydraulic Schematic

Meter Drive +1 Tank

Part No. 401226-2

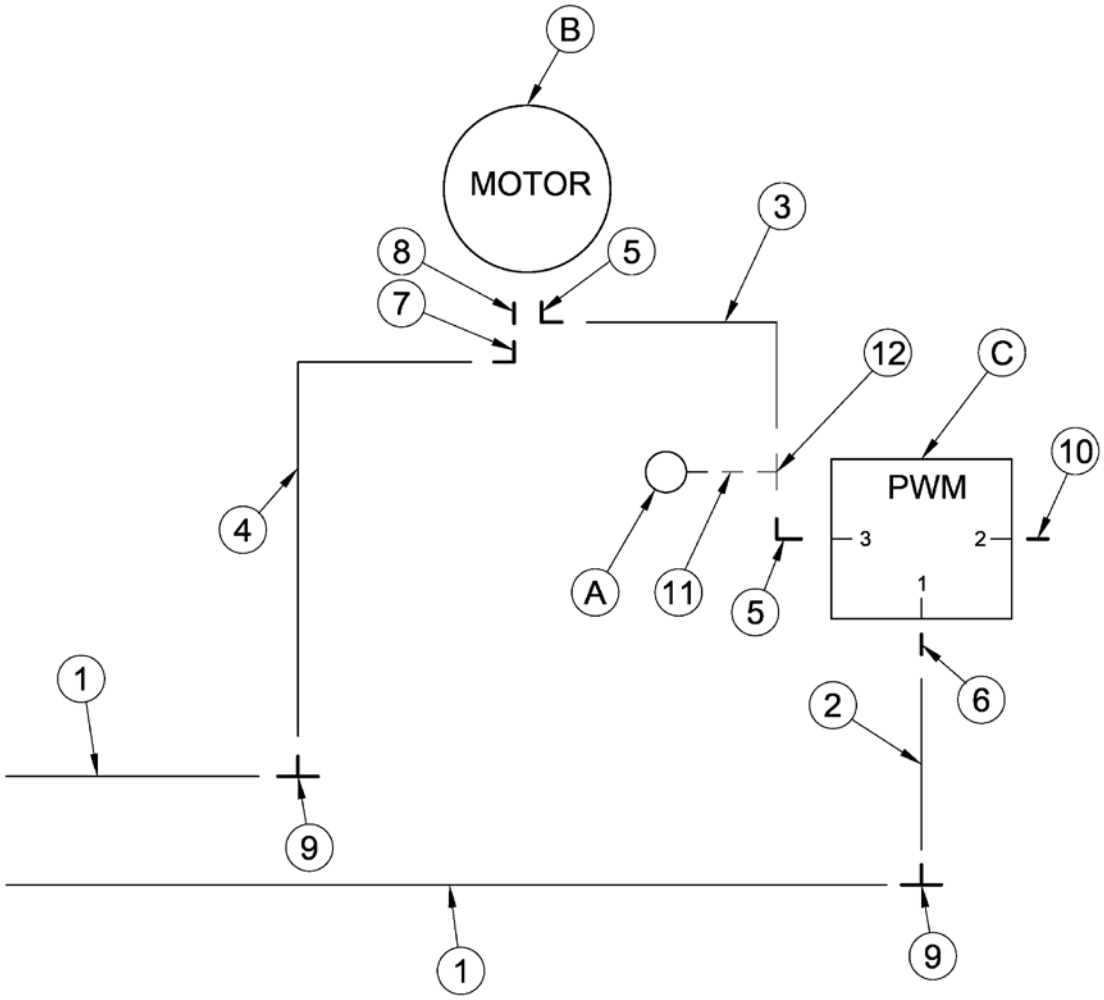

ITEM	PART NO.	QTY.	DESCRIPTION
1	258224	2	HOSE, 1/2-2WB X 84LOA - 08JIC F-SW X 08JIC F-SW
2	258154	1	HOSE, 3/8-2WB X 31 LOA - 06 JIC F-SW X 08 JIC F-SW
3	258141	1	HOSE, 3/8-2WB X 30 1/2 IN - 06JIC F-SW X 06JIC F-SW
4	258239	1	HOSE, 3/8-2WB X 55 LOA - 06 JIC F-SW X 08 JIC F-SW
5	258002	2	ELBOW, 90D - 06 ORB M X 06 JIC M
6	258051	1	CONNECTOR, 06 ORB M X 06 JIC M
7	258005	1	EL, 90D - 06 JIC M X 06 JIC F-SW
8	258053	1	CONNECTOR, 08 ORB M X 06 JIC M
9	258028	2	TEE, 08 JIC M X M X M
10	258041	1	PLUG, 06 ORB M
11	258038	1	CONNECTOR, 06 JIC F-SW X 1/4 NPT F
12	258025	1	TEE, 06 JIC F-SW X 06 JIC M X 06 JIC M - RUN
A	258094	1	GAUGE, PRESSURE - SPG - 1500P 1/4 NPT
B	260717	1	MOTOR, HYD - OMNISEED - 7/8 HEX - RAVEN
C	260718	1	VALVE, PWM - OMNISEED - C/W MANIFOLD - RAVEN

Parts Description: Hydraulic Schematic

Meter Drive – T/B Nova

Part No. 401246

ITEM	PART NO.	QTY.	DESCRIPTION
1	258051	2	CONNECTOR, 06 ORB M X 06 JIC M
2	258028	3	TEE, 08 JIC M X M X M
3	258076	1	COUPLER, MALE - PIONEER - 08 ORB F
4	258005	2	EL, 90D - 06 JIC M X 06 JIC F-SW
5	258053	2	CONNECTOR, 08 ORB M X 06 JIC M
6	258025	2	TEE, 06 JIC F-SW X 06 JIC M X 06 JIC M - RUN
7	258038	2	CONNECTOR, 06 JIC F-SW X 1/4 NPT F
8	258002	4	EL, 90D - 06 JIC M X 06 ORB M
9	258239	2	HOSE, 3/8-2WB X 55 LOA - 06 JIC F-SW X 08 JIC F-SW
10	258041	2	PLUG, 06 ORB M
11	258238	1	HOSE, 3/8-2WB X 120 LOA - 06 JIC F-SW X 08 JIC F-SW
12	258141	2	HOSE, 3/8-2WB X 30 1/2LOA - 06 JIC F-SW X 06 JIC F-SW
13	401077	1	ASSY, HOSE - 1/2-2WB X 84 LOA - C/W FITTINGS
14	258154	1	HOSE, 3/8-2WB X 31 LOA - 06 JIC F-SW X 08 JIC F-SW
15	258342	1	HOSE, 1/2-2WB X 40 LOA - 08 JIC F-SW X 08 JIC F-SW
16	258224	2	HOSE, 1/2-2WB X 84LOA - 08JIC F-SW X 08JIC F-SW
17	258050	1	CONNECTOR, 08 ORB M X 08 JIC M
A	258094	2	GAUGE, PRESSURE - SPG-1500P 1/4 NPT
B	260717	2	MOTOR, HYD - OMNISEED - 7/8 HEX - RAVEN
C	260718	2	VALVE, PWM - OMNISEED - C/W MANIFOLD - RAVEN

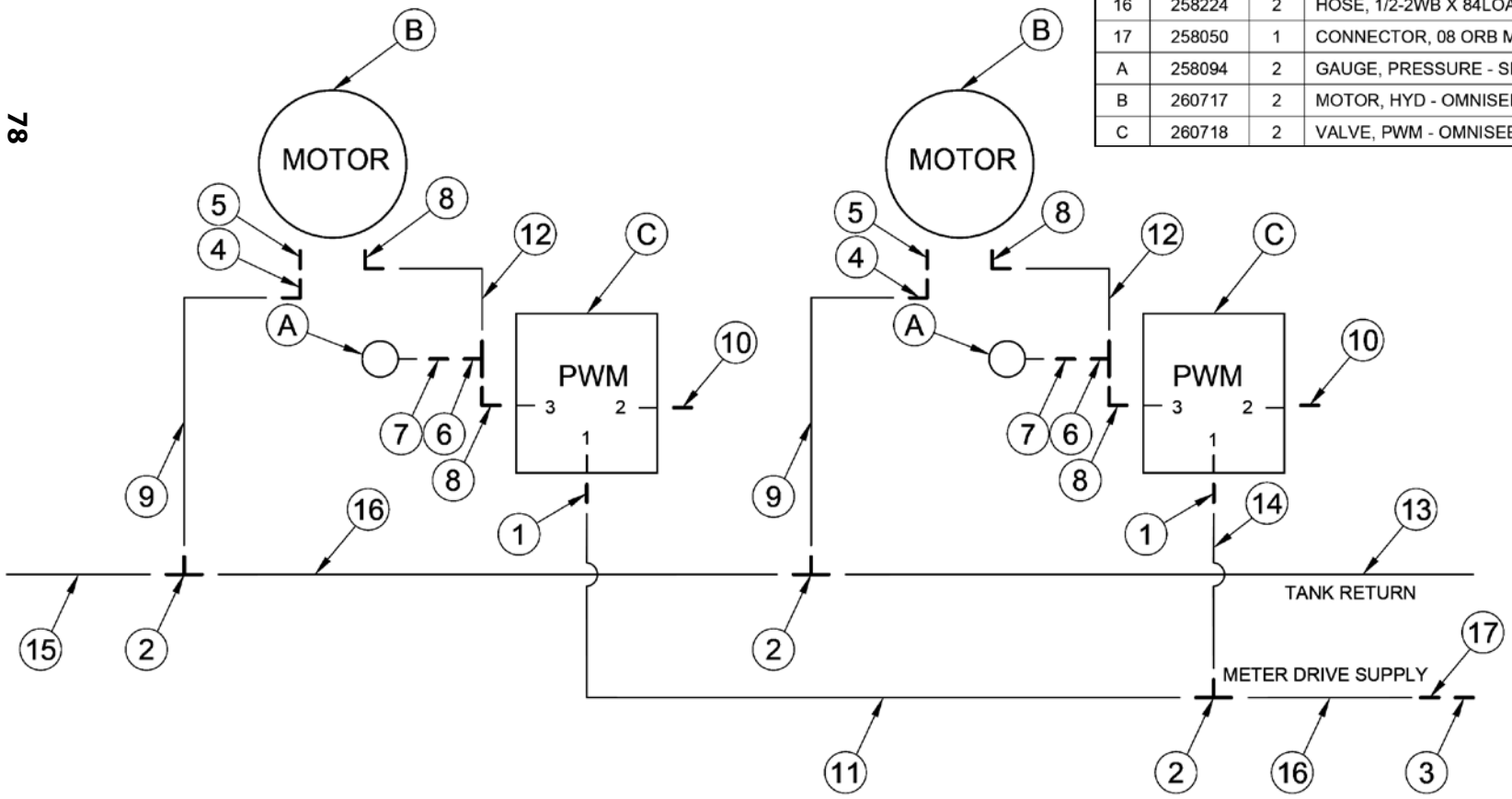

Parts Description: Hydraulic Schematic

Lids - Single Shoot

Part No. 401229-2

ITEM	PART NO.	QTY.	DESCRIPTION
1	258293	2	HOSE, 3/8-2WB X 132LOA - 08JIC F-SW X 06JIC F-SW
2	257998	2	CONNECTOR, 08 ORBM X 06 JIC M - .020 ORIFICE
3	258162	2	HOSE, 3/8-2WB X 228LOA - 06JIC F-SW X 06JIC F-SW
4	258107	2	HOSE, 3/8-2WB X 87LOA - 06JIC F-SW X 06JIC F-SW
5	258059	2	CONNECTOR, 06 ORB M X 06 JIC F-SW
6	258165	2	HOSE, 3/8-2WB X 96LOA - 06 JIC F-SW X 06 JIC F-SW
7	258005	5	EL, 90D - 06 JIC M X 06 JIC F-SW
8	258053	2	CONNECTOR, 08 ORB M X 06 JIC M
9	258024	4	TEE, 06 JIC M X M X M
A	258083	1	VALVE, BALL - 06 ORB F X 06 ORB F - C/W HANDLE
B	258089	1	VALVE, CHECK - INLINE - 06 JIC M X F - VONBERG

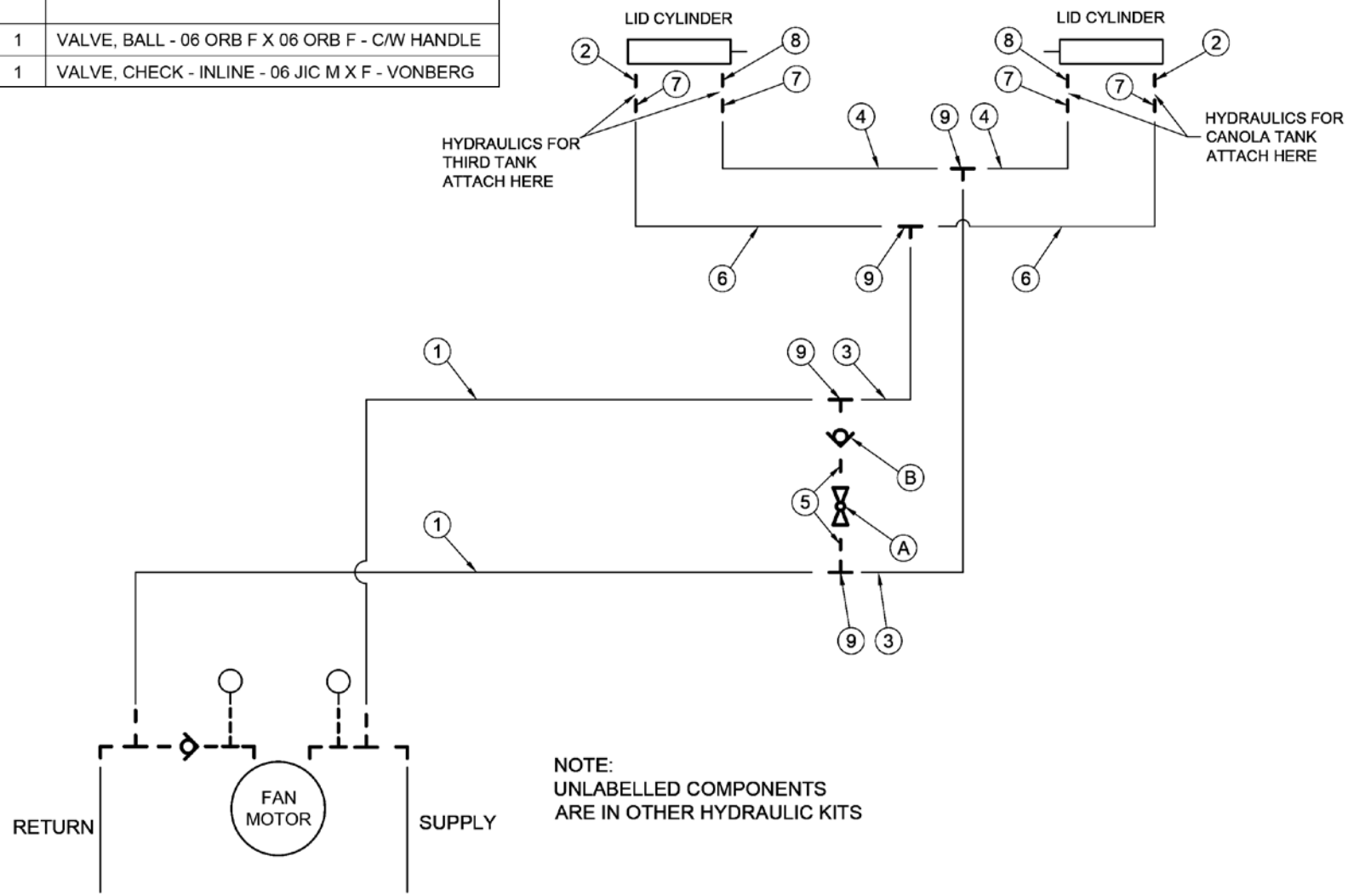

Parts Description: Hydraulic Schematic

Lids - Dual Shoot

Part No. 401230-7

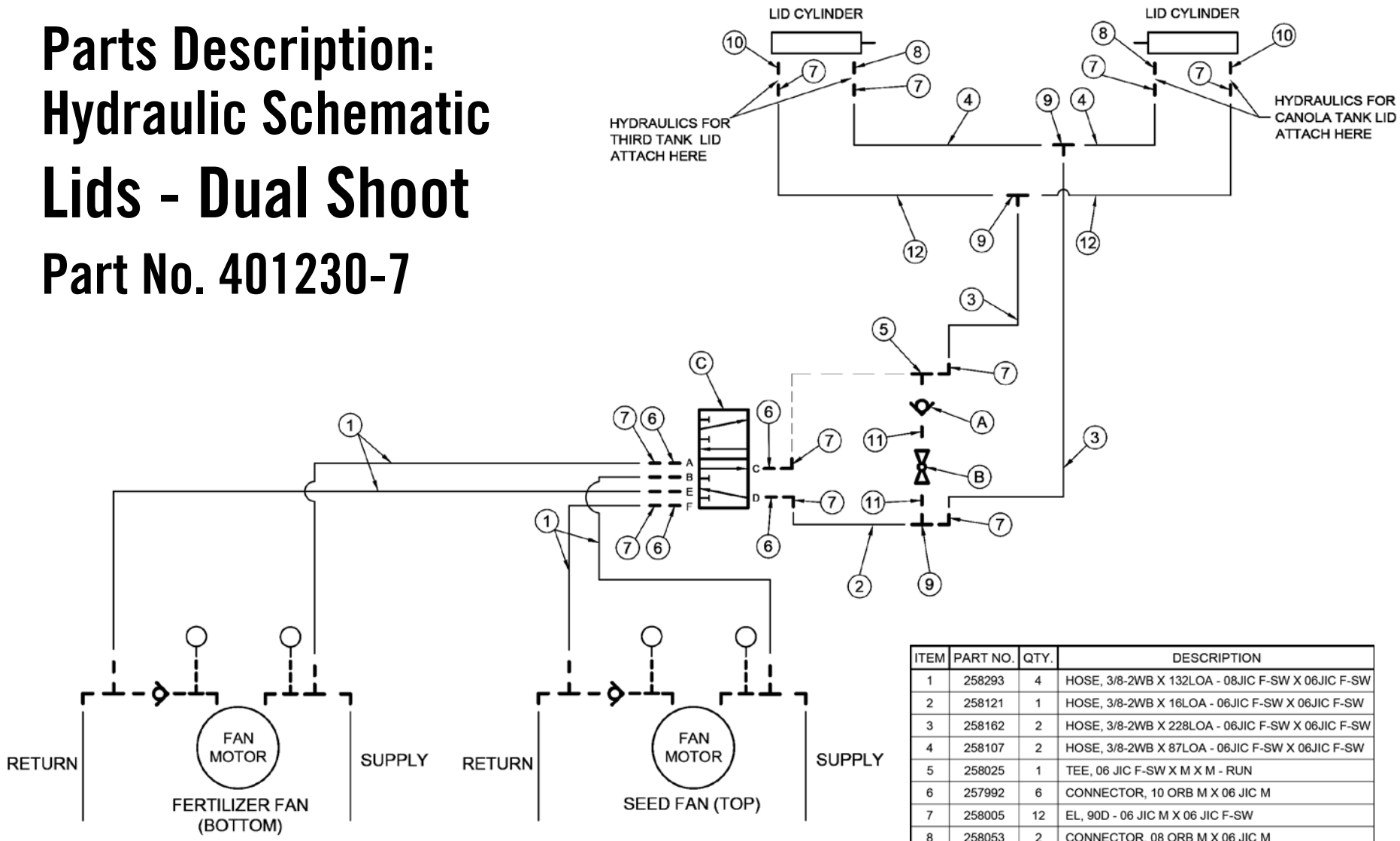

NOTE:
UNLABELLED COMPONENTS
ARE IN OTHER HYDRAULIC KITS

ITEM	PART NO.	QTY.	DESCRIPTION
1	258293	4	HOSE, 3/8-2WB X 132LOA - 08JIC F-SW X 06JIC F-SW
2	258121	1	HOSE, 3/8-2WB X 16LOA - 06JIC F-SW X 06JIC F-SW
3	258162	2	HOSE, 3/8-2WB X 228LOA - 06JIC F-SW X 06JIC F-SW
4	258107	2	HOSE, 3/8-2WB X 87LOA - 06JIC F-SW X 06JIC F-SW
5	258025	1	TEE, 06 JIC F-SW X M X M - RUN
6	257992	6	CONNECTOR, 10 ORB M X 06 JIC M
7	258005	12	EL, 90D - 06 JIC M X 06 JIC F-SW
8	258053	2	CONNECTOR, 08 ORB M X 06 JIC M
9	258024	3	TEE, 06 JIC M X M X M
10	257998	2	CONNECTOR, 08 ORBM X 06 JIC M - .020 ORIFICE
11	258059	2	CONNECTOR, 06 ORB M X 06 JIC F-SW
12	258165	2	HOSE, 3/8-2WB X 96LOA - 06 JIC F-SW X 06 JIC F-SW
A	258089	1	VALVE, CHECK - INLINE - 06 JIC M X F - VONBERG
B	258083	1	VALVE, BALL - 06 ORB F X 06 ORB F - C/W HANDLE
C	258305	1	VALVE, CONTROL - SELECTOR - DS-3A4D - NOVA

Parts Description: Hydraulic Schematic

Lids +1 Tank

Part No. 401231-3

ITEM	PART NO.	QTY.	DESCRIPTION
1	258231	2	HOSE, 3/8-2WB X 132LOA - 06JIC F-SW X 06JIC F-SW
2	258053	1	CONNECTOR, 08 ORB M X 06 JIC M
3	257998	1	CONNECTOR, 08 ORBM X 06 JIC M - .020 ORIFICE
4	258026	2	TEE, 06 JIC M X 06 JIC M X 06 JIC F-SW - BRANCH
5	258005	4	EL, 90D - 06 JIC M X 06 JIC F - SW

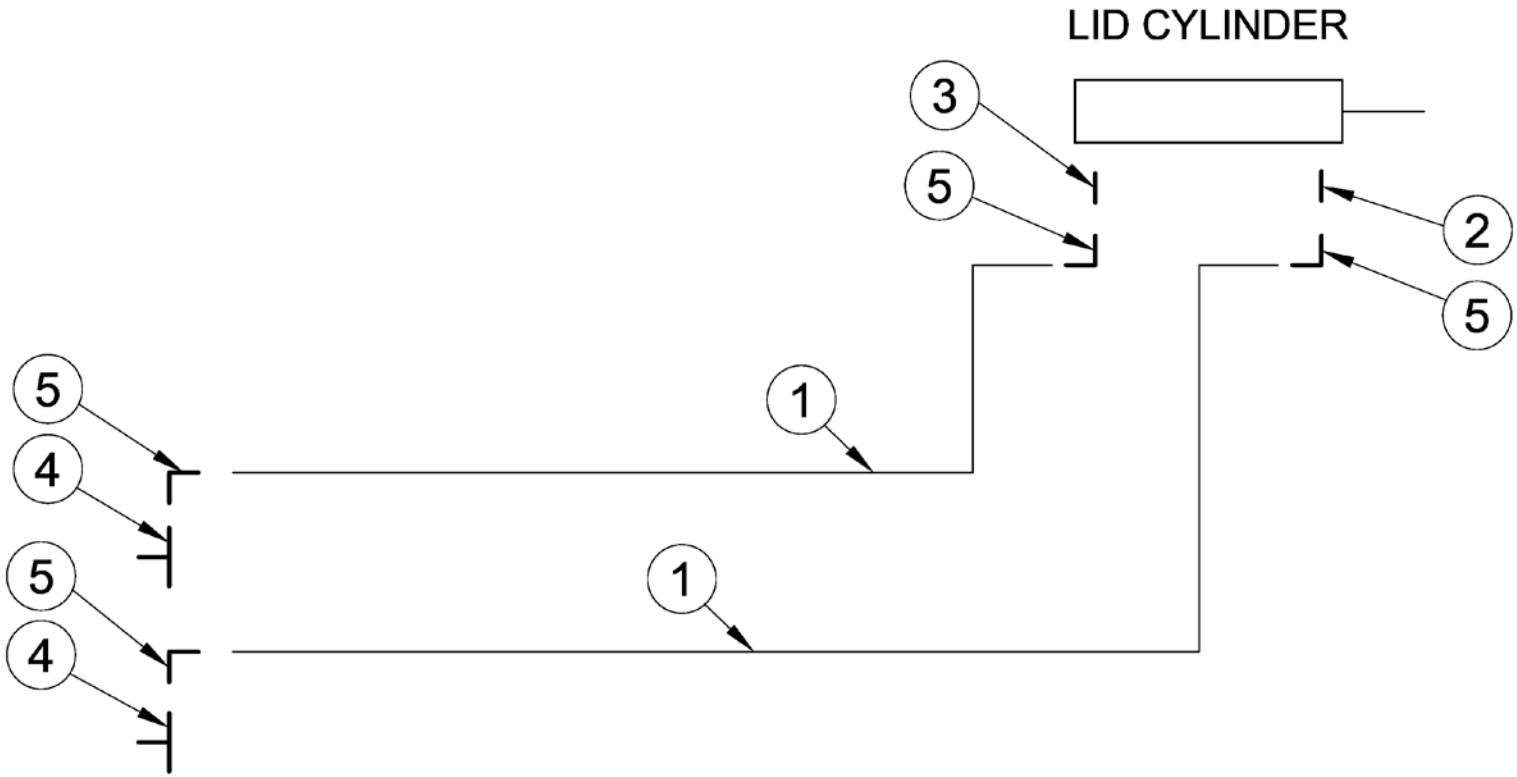

Parts Description: Hydraulic Schematic

Lids - Canola Tank

Part No. 401240-2

ITEM	PART NO.	QTY.	DESCRIPTION
1	258231	2	HOSE, 3/8-2WB X 132 LOA - 06 JIC F-SW X 06 JIC F-SW
2	258053	1	CONNECTOR, 08 ORB M X 06 JIC M
3	257998	1	CONNECTOR, 08 ORBM X 06 JIC M - .020 ORIFICE
4	258026	2	TEE, 06 JIC M X 06 JIC M X 06 JIC F-SW - BRANCH
5	258005	2	EL, 90D - 06 JIC M X 06 JIC F - SW

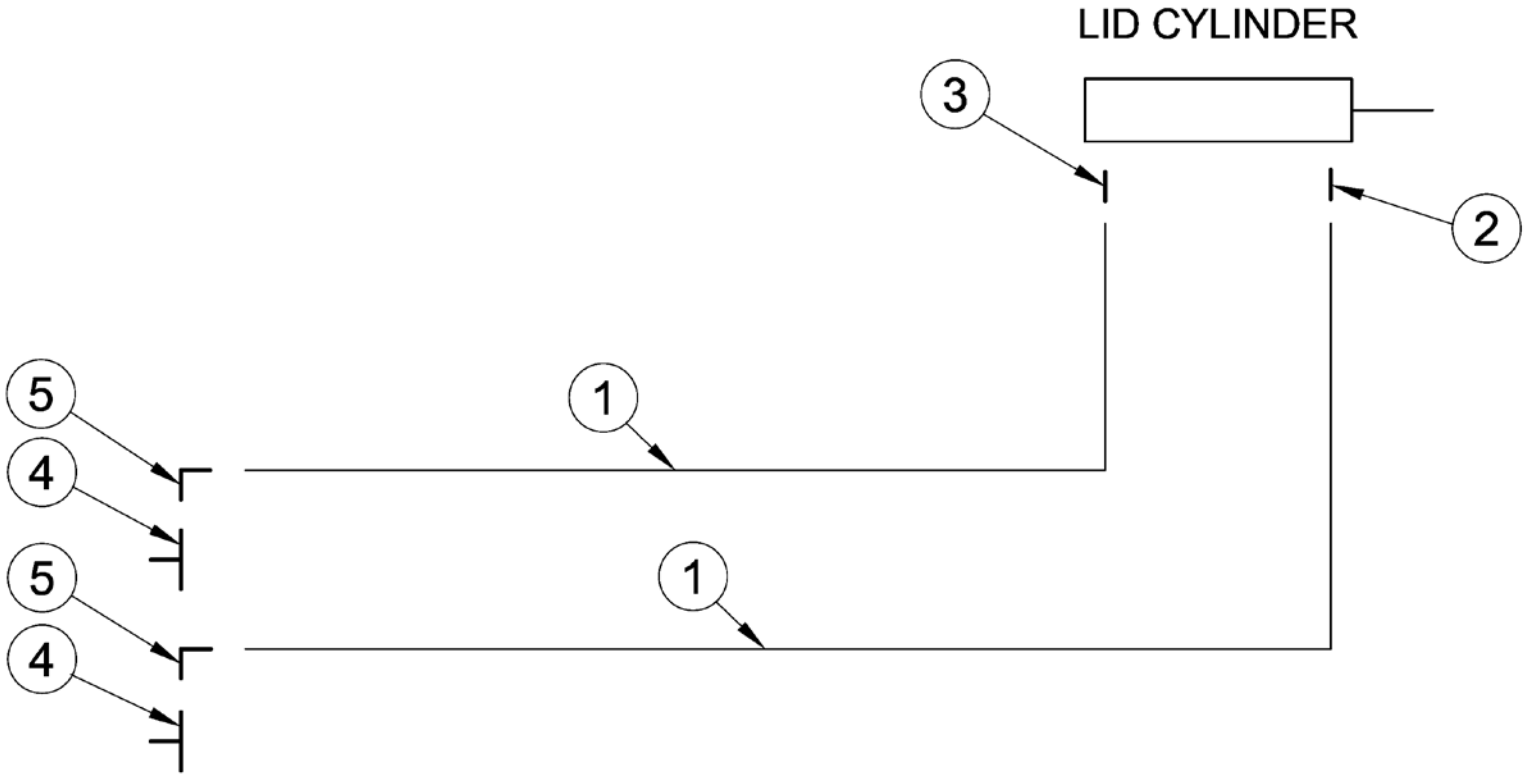

Parts Description: Hydraulic Schematic

Lids – 110 BU Tank – T/B Nova

Part No. 401242

ITEM	PART NO.	QTY.	DESCRIPTION
1	258285	2	HOSE, 3/8-2WB X 42 LOA - 06 JIC F-SW X 06 JIC F-SW
2	258024	4	TEE, 06 JIC M X 06 JIC M X 06 JIC M
3	258005	2	EL, 90D - 06 JIC M X 06 JIC F-SW
4	257998	2	CONNECTOR, 08 ORBM X 06 JIC M - .020 ORIFICE
5	258053	2	CONNECTOR, 08 ORB M X 06 JIC M
6	258111	4	HOSE, 3/8-2WB X 16 1/2LOA - 06JIC F-SW X 06JIC F-SW
7	258134	2	HOSE, 3/8-2WB X 54 LOA - 06JIC F-SW X 06JIC F-SW

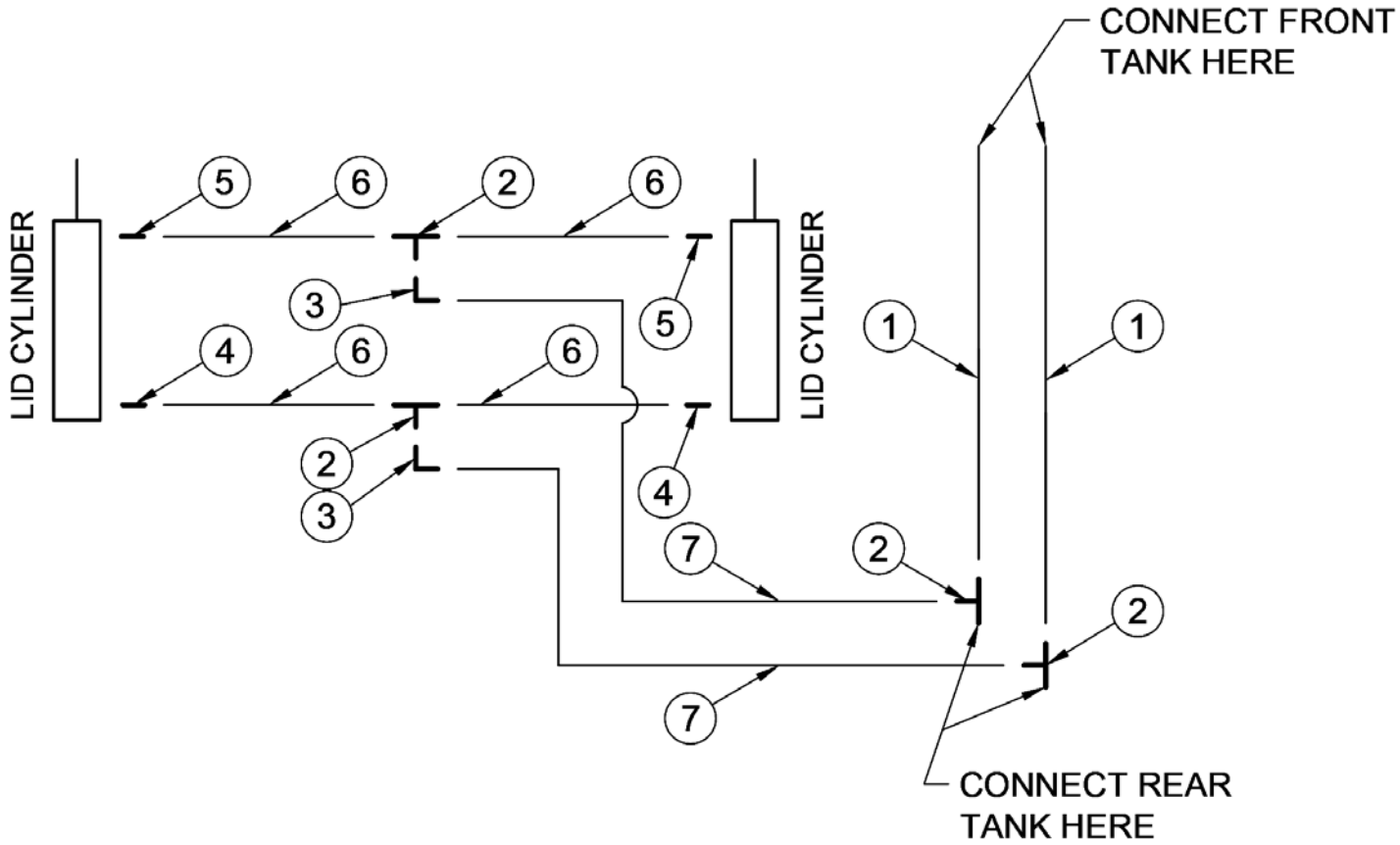

Parts Description: Hydraulic Schematic

Dual Fans

Part No. 401237-4 – 780 Nova
401253 – 820 Nova
401239-2 – 520 Nova
401251 – 560 Nova

401237-4

ITEM	PART NO.	QTY	DESCRIPTION
1	258275	4	HOSE, 3/4-2WB X 575LOA - 12 JIC F-SW X 12 JIC F-SW
2	258278	1	HOSE, 1/2-2WB X 539LOA-06 JIC F-SW X 06 JIC F-SW
3	258279	2	HOSE, CASE DRAIN - G102R-06X 36LOA-O6 JIC F-SW
4	258005	2	EL, 90D - 06 JIC M X 06 JIC F-SW
5	258048	1	CONNECTOR, 1/2 NPT M X 06 JIC M
6	258073	1	COUPLER, FEMALE - NON-VALVED - 1/2 NPT F
7	258024	1	TEE, 06 JIC M X 06 JIC M X 06 JIC M
8	258084	4	CONNECTOR - 12 JIC F-SW X 08 JIC M
9	258002	2	EL, 90D - 06 JIC M X 06 ORB M
10	258003	4	EL, 90D - 12 JIC M X 10 ORB M
11	258052	4	CONNECTOR, 12 ORB M X 12 JIC M
12	257987	4	EL, 90D - 12 JIC M X 12 JIC F-SW
13	258052	2	CONNECTOR, 12 ORB M X 12 JIC M
14	257996	2	CONNECTOR, 12 ORB M X 12 JIC F-SW
15	258038	4	CONNECTOR, 06 JIC F-SW X 1/4 NPT F
16	257989	4	CONNECTOR, 12 JIC F X 06 JIC M
17	258033	8	TEE, 12 JIC F-SW X 12 JIC M X 12 JIC M - RUN
A	258089	2	VALVE, CHECK - INLINE - 06 JIC M X F - VONBERG
B	257970	4	COUPLER, MALE - STUCCHI - 12 ORB F
C	258094	2	GAUGE, PRESSURE - SPG-1500P 1/4 NPT
D	258095	2	GAUGE, PRESSURE - SPG-3000P 1/4 NPT
E	258087	2	VALVE, CHECK - 12 ORB F

401253 (Substitute Items Below)

ITEM	QTY	PART NO.	DESCRIPTION
1	4	258343	HOSE, 3/4-2WB X 623LOA - 12 JIC F-SW X 12 JIC F-SW
2	1	258345	HOSE, 1/2-2WB X 587LOA - 06 JIC F-SW X 06 JIC F-SW

401239-2 (Substitute Items Below)

ITEM	QTY	PART NO.	DESCRIPTION
1	4	258246	HOSE, 3/4-2WB X 488LOA - 12 JIC F-SW X 12 JIC F-SW
2	1	258247	HOSE, 1/2-2WB X 452LOA - 06 JIC F-SW X 06 JIC F-SW

401251 (Substitute Items Below)

ITEM	QTY	PART NO.	DESCRIPTION
1	4	258344	HOSE, 3/4-2WB X 536LOA - 12 JIC F-SW X 12 JIC F-SW
2	1	258346	HOSE, 1/2-2WB X 500LOA - 06 JIC F-SW X 06 JIC F-SW

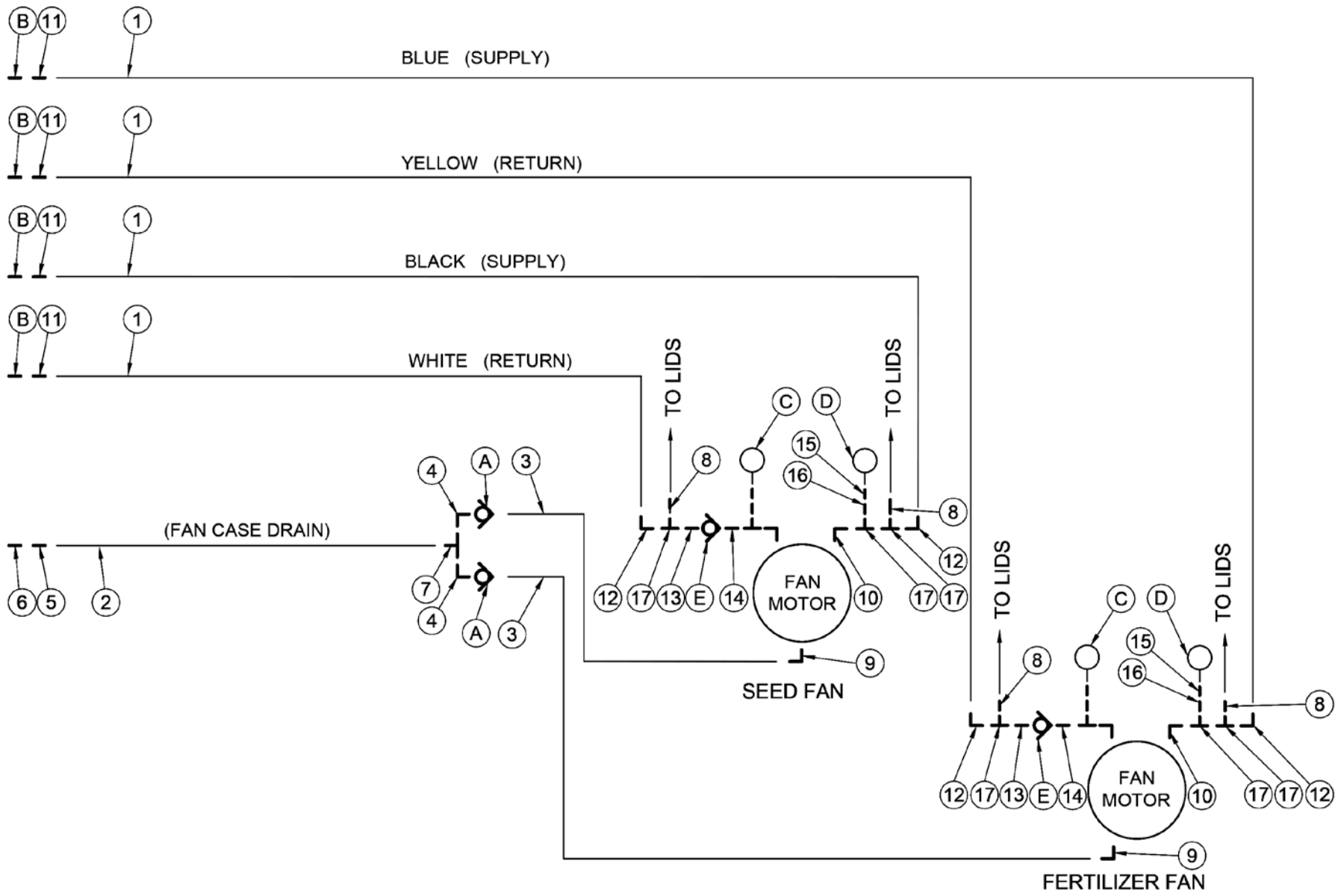
BLUE (SUPPLY)
YELLOW (RETURN)
BLACK (SUPPLY)
WHITE (RETURN)
(FAN CASE DRAIN)
TO LIDS
TO LIDS
TO LIDS
TO LIDS
FAN MOTOR
FAN MOTOR
SEED FAN
FERTILIZER FAN

Parts Description: Hydraulic Schematic

Single Fan

Part No. 401236-3 – 780 Nova
401252 – 820 Nova
401238-2 – 520 Nova
401250 – 560 Nova

401236-3

ITEM	PART NO.	QTY.	DESCRIPTION
1	258275	2	HOSE, 3/4-2WB X 575LOA - 12 JIC F-SW X 12 JIC F-SW
2	258278	1	HOSE, 1/2-2WB X 539LOA-06 JIC F-SW X 06 JIC F-SW
3	258279	1	HOSE, CASE DRAIN - G102R-06X 36LOA-06 JIC F-SW
4	258048	1	CONNECTOR, 1/2 NPT M X 06 JIC M
5	258073	1	COUPLER, FEMALE - NON-VALVED - 1/2 NPT F
6	258063	1	UNION, 06 JIC M X 06 JIC M
7	258002	1	EL, 90D - 06 JIC M X 06 ORB M
8	258003	2	EL, 90D - 12 JIC M X 10 ORB M
9	258052	2	CONNECTOR, 12 ORB M X 12 JIC M
10	258084	2	CONNECTOR - 12 JIC F-SW X 08 JIC M
11	257987	2	EL, 90D - 12 JIC M X 12 JIC F-SW
12	258052	1	CONNECTOR, 12 ORB M X 12 JIC M
13	257996	1	CONNECTOR, 12 ORB M X 12 JIC F-SW
14	258038	2	CONNECTOR, 06 JIC F-SW X 1/4 NPT F
15	257989	2	CONNECTOR, 12 JIC F X 06 JIC M
16	258033	4	TEE, 12 JIC F-SW X 12 JIC M X 12 JIC M - RUN
A	257970	2	COUPLER, MALE - STUCCHI - 12 ORB F
B	258089	1	VALVE, CHECK - INLINE - 06 JIC M X F - VONBERG
C	258094	1	GAUGE, PRESSURE - SPG-1500P 1/4 NPT
D	258095	1	GAUGE, PRESSURE - SPG-3000P 1/4 NPT
E	258087	1	VALVE, CHECK - 12 ORB F

401252 (Substitute Items Below)

ITEM	QTY	PART NO.	DESCRIPTION
1	2	258343	HOSE, 3/4-2WB X 623LOA - 12 JIC F-SW X 12 JIC F-SW
2	1	258345	HOSE, 1/2-2WB X 587LOA - 06 JIC F-SW X 06 JIC F-SW

401238-2 (Substitute Items Below)

ITEM	QTY	PART NO.	DESCRIPTION
1	2	258246	HOSE, 3/4-2WB X 488LOA - 12 JIC F-SW X 12 JIC F-SW
2	1	258247	HOSE, 1/2-2WB X 452LOA - 06 JIC F-SW X 06 JIC F-SW

401250 (Substitute Items Below)

ITEM	QTY	PART NO.	DESCRIPTION
1	2	258344	HOSE, 3/4-2WB X 536LOA - 12 JIC F-SW X 12 JIC F-SW
2	1	258346	HOSE, 1/2-2WB X 500LOA - 06 JIC F-SW X 06 JIC F-SW

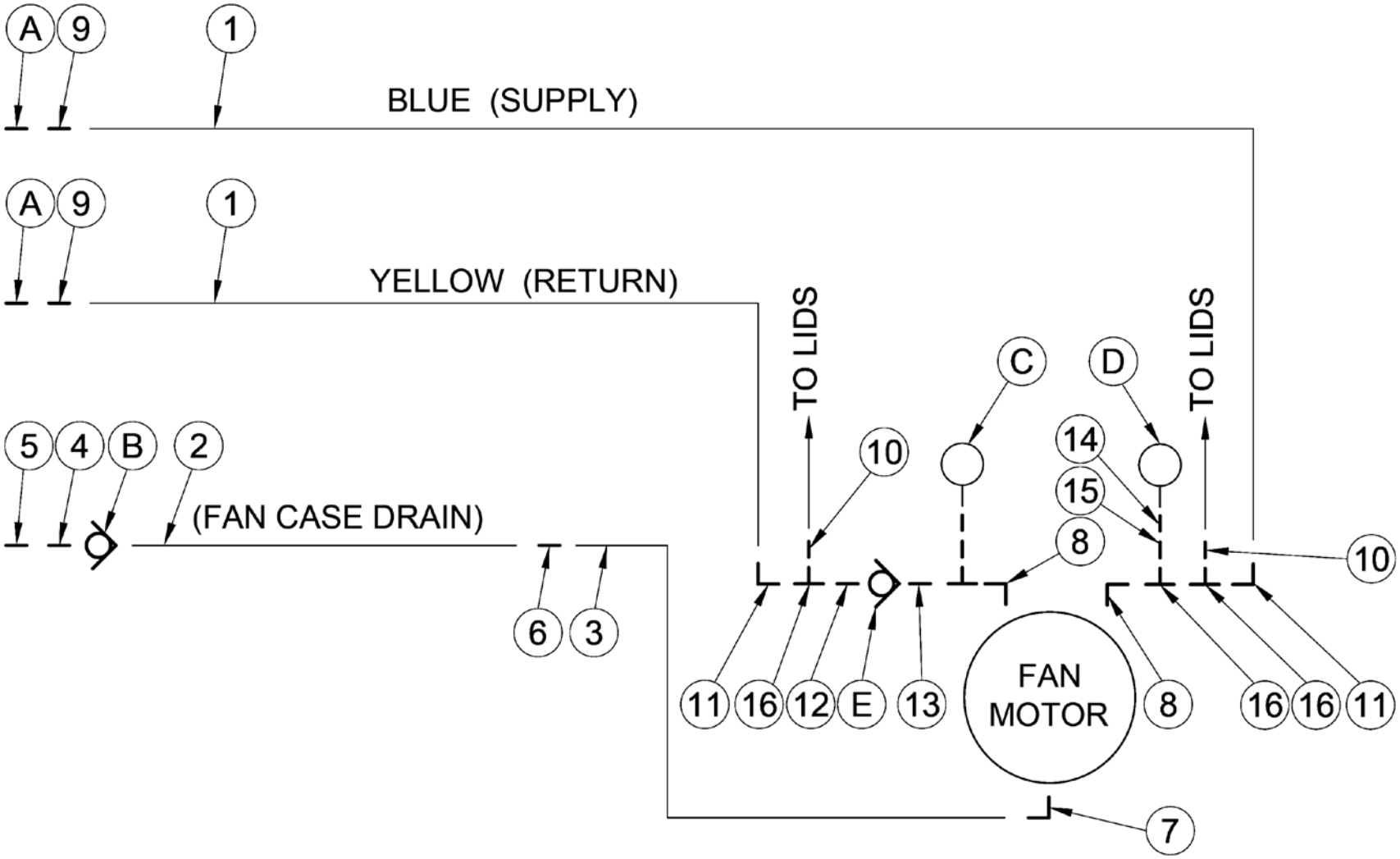
A
9
1
BLUE (SUPPLY)
A
9
1
YELLOW (RETURN)
5
4
B
2
(FAN CASE DRAIN)
TO LIDS
TO LIDS
C
D
10
14
15
8
10
6
3
11
16
12
E
13
FAN
MOTOR
8
16
16
11
7

Parts Description: Hydraulic Schematic

Dual Fans – T/B Nova

Part No. 401244

ITEM	PART NO.	QTY	DESCRIPTION
1	401078	4	ASSY, HOSE - 3/4-2WB X 288 LOA - C/W FITTINGS
2	258123	1	HOSE, 3/8-2WB X 40 LOA - 06JIC F-SW X 06 JIC F-SW
3	258279	2	HOSE, CASE DRAIN - G102R-06X 36LOA-O6 JIC F-SW
4	258005	2	EL, 90D - 06 JIC M X 06 JIC F-SW
5	258048	1	CONNECTOR, 1/2 NPT M X 06 JIC M
6	258073	1	COUPLER, FEMALE - NON-VALVED - 1/2 NPT F
7	258024	1	TEE, 06 JIC M X 06 JIC M X 06 JIC M
8	258049	1	CONNECTOR, 08 JIC F X 06 JIC M
9	258002	2	EL, 90D - 06 JIC M X 06 ORB M
10	258003	4	EL, 90D - 12 JIC M X 10 ORB M
11	258028	1	TEE, 08 JIC M X M X M
12	401735	1	ASSY, HOSE - 1/2-2WB X 276LOA - C/W FITTINGS
13	258084	4	CONNECTOR - 12 JIC F-SW X 08 JIC M
14	257987	4	EL, 90D - 12 JIC M X 12 JIC F-SW
15	258038	4	CONNECTOR, 06 JIC F-SW X 1/4 NPT F
16	257989	4	CONNECTOR, 12 JIC F X 06 JIC M
17	258033	8	TEE, 12 JIC F-SW X 12 JIC M X 12 JIC M - RUN
18	257996	2	CONNECTOR, 12 ORB M X 12 JIC F-SW
19	258052	2	CONNECTOR, 12 ORB M X 12 JIC M
A	258089	2	VALVE, CHECK - INLINE - 06 JIC M X F - VONBERG
B	258094	2	GAUGE, PRESSURE - SPG-1500P 1/4 NPT
C	258095	2	GAUGE, PRESSURE - SPG-3000P 1/4 NPT
D	258087	2	VALVE, CHECK - 12 ORB F

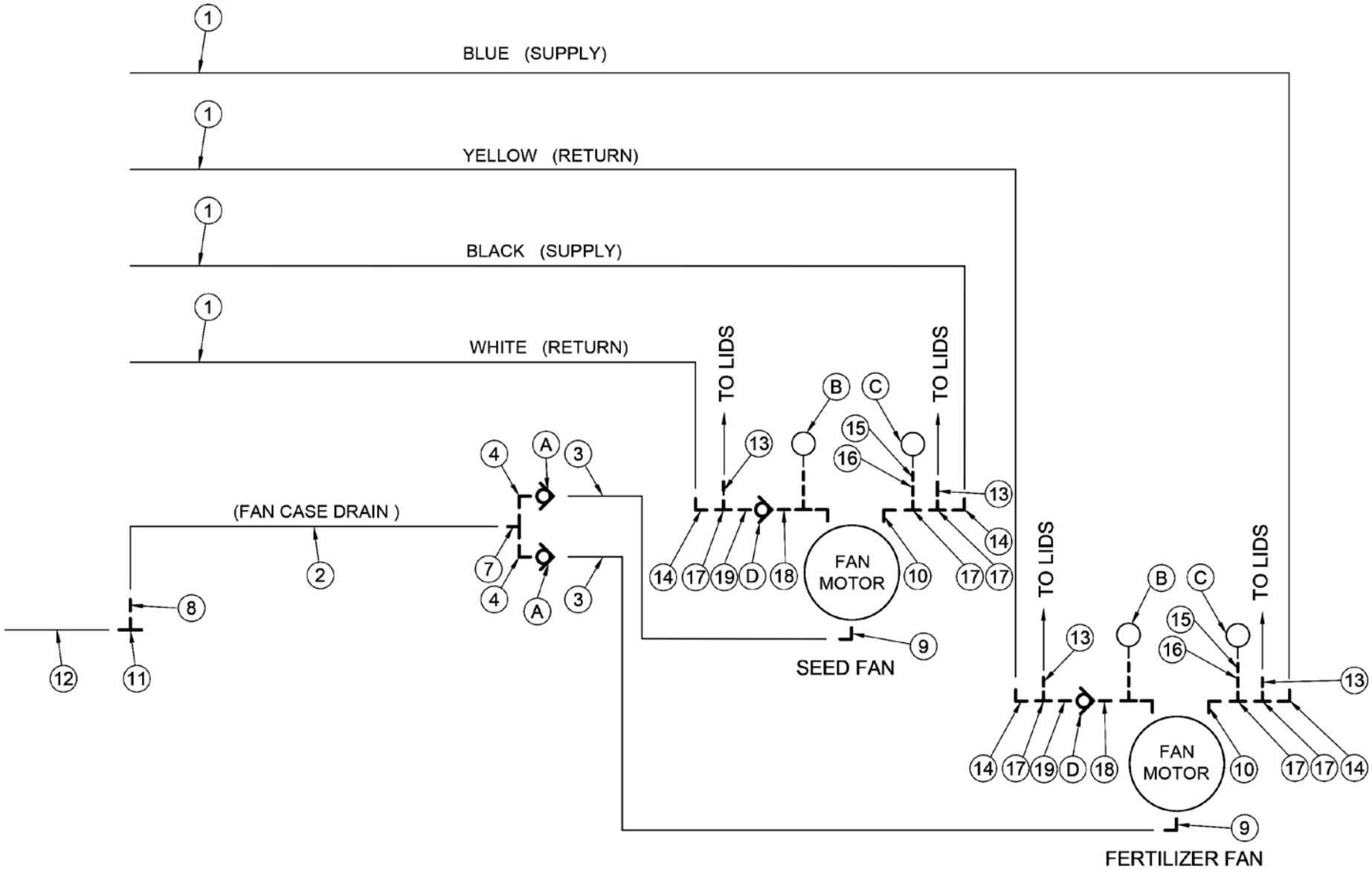
BLUE (SUPPLY)
YELLOW (RETURN)
BLACK (SUPPLY)
WHITE (RETURN)
(FAN CASE DRAIN)
TO LIDS
TO LIDS
TO LIDS
TO LIDS
FAN MOTOR
FAN MOTOR
SEED FAN
FERTILIZER FAN

Parts Description: Hydraulic Schematic

Single Fan – T/B Nova

Part No. 401245

ITEM	PART NO.	QTY	DESCRIPTION
1	401078	2	ASSY, HOSE - 3/4-2WB X 288 LOA - C/W FITTINGS
2	258123	1	HOSE, 3/8-2WB X 40 LOA - 06JIC F-SW X 06 JIC F-SW
3	258279	1	HOSE, CASE DRAIN - G102R-06X 36LOA-06 JIC F-SW
4	258049	1	CONNECTOR, 08 JIC F X 06 JIC M
5	258028	1	TEE, 08 JIC M X M X M
6	258063	1	UNION, 06 JIC M X 06 JIC M
7	258002	1	EL, 90D - 06 JIC M X 06 ORB M
8	258003	2	EL, 90D - 12 JIC M X 10 ORB M
9	258084	2	CONNECTOR - 12 JIC F-SW X 08 JIC M
10	401735	1	ASSY, HOSE - 1/2-2WB X 276LOA - C/W FITTINGS
11	257987	2	EL, 90D - 12 JIC M X 12 JIC F-SW
12	258052	1	CONNECTOR, 12 ORB M X 12 JIC M
13	257996	1	CONNECTOR, 12 ORB M X 12 JIC F-SW
14	258038	2	CONNECTOR, 06 JIC F-SW X 1/4 NPT F
15	257989	2	CONNECTOR, 12 JIC F X 06 JIC M
16	258033	4	TEE, 12 JIC F-SW X 12 JIC M X 12 JIC M - RUN
A	258089	1	VALVE, CHECK - INLINE - 06 JIC M X F - VONBERG
B	258094	1	GAUGE, PRESSURE - SPG-1500P 1/4 NPT
C	258095	1	GAUGE, PRESSURE - SPG-3000P 1/4 NPT
D	258087	1	VALVE, CHECK - 12 ORB F

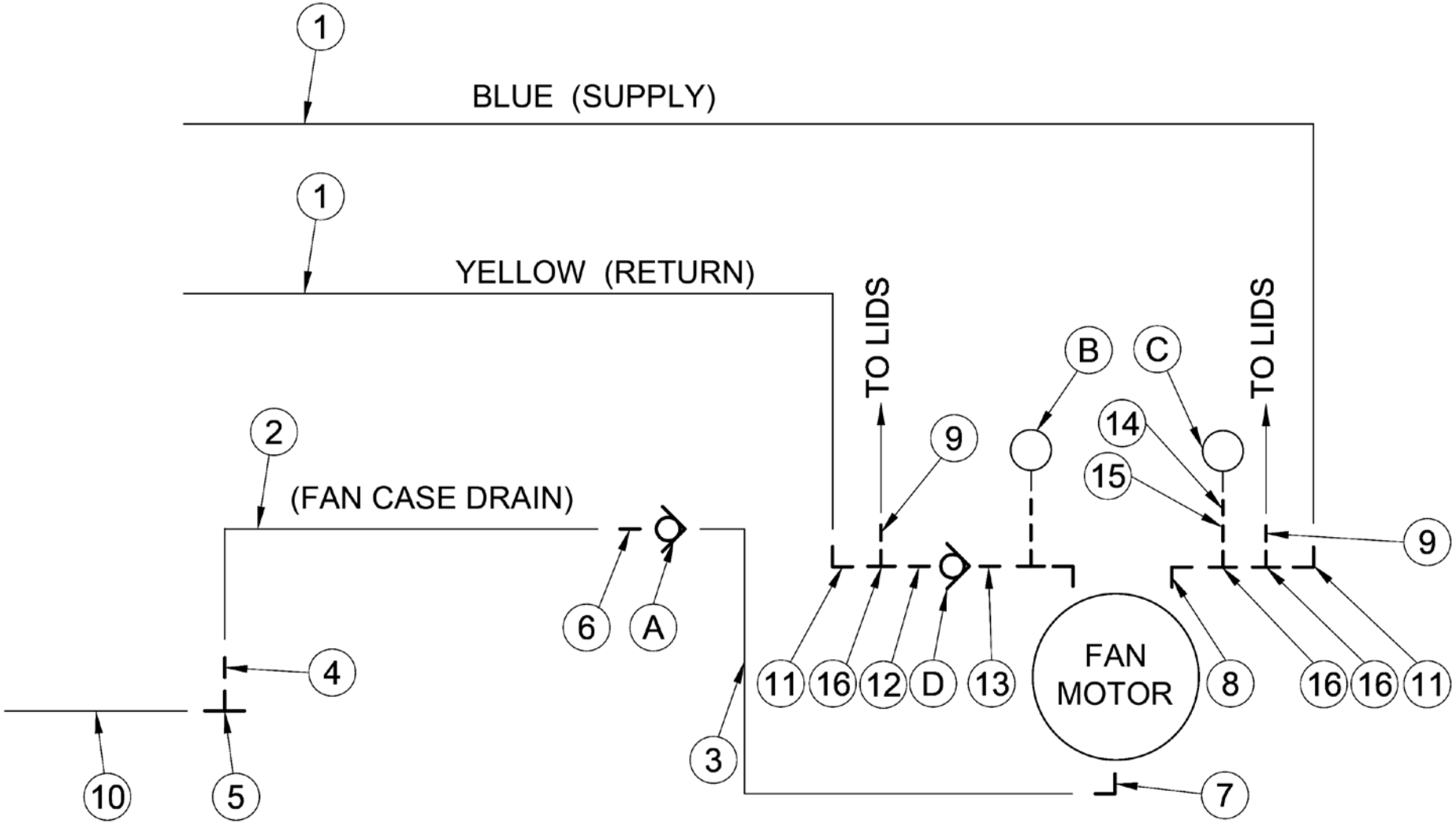
1
BLUE (SUPPLY)
1
YELLOW (RETURN)
TO LIDS
TO LIDS
B
C
2
(FAN CASE DRAIN)
9
14
15
9
6
A
4
11
16
12
D
13
FAN
MOTOR
8
16
16
11
3
10
5
7

Parts Description: Hydraulic Schematic

28 FT Conveyor – 780/820 Nova

Part No. 401088-7

ITEM	PART NO.	QTY	DESCRIPTION
1	258287	2	HOSE, 3/4-2WB X 220 LOA - 12 JIC F-SW X 12 JIC-F-SW
2	258288-1	2	HOSE, 3/4-2WB X 236 LOA - 12 JIC F-SW X 12 JIC-F-SW
3	258289	1	HOSE, 3/4-2WB X 348 LOA - 12 JIC F-SW X 12 JIC-F-SW
4	258290	1	HOSE, 3/4-2WB X 124 LOA - 12 JIC F-SW X 12 JIC-F-SW
5	258051	2	CONNECTOR, 06 ORB M X 06 JIC M
6	258292	2	HOSE, 3/4-2WB X 114 LOA - 12 JIC M X 12 JIC-F-SW
7	258177	2	HOSE, 3/8-2WB X 144LOA - 06JIC F-SW X 06JIC F-SW
8	258195	2	HOSE, 3/8-2WB X 320LOA - 06JIC F-SW X 06JIC F-SW
9	258296-1	1	HOSE, 1/4-2WB X 238LOA - 06 JIC F-SW X 06 JIC F-SW
10	258229	2	HOSE, 3/8-2WB X 84 LOA - 06 JIC F-SW X 06 JIC F-SW
11	258124	1	HOSE, 3/8-2WB X 79LOA - 06JIC F-SW X 06 JIC F-SW
12	258153	1	HOSE, 3/8-2WB X 192LOA - 06 JIC F-SW X 06 JIC F-SW
13	258134	1	HOSE, 3/8-2WB X 54 LOA - 06JIC F-SW X 06JIC F-SW
14	258334	1	HOSE, 3/8-2WB X 172LOA - 06JIC F-SW X 06 JIC F-SW
15	257980	3	CONNECTOR, 06 ORBM X 06 JIC M - .020 ORIFICE
16	257981	1	CONNECTOR, 08 ORB M X 12 JIC M
17	257987	5	EL, 90D - 12 JIC M X 12 JIC F-SW
18	257988	5	CONNECTOR, 10 ORB M X 12 JIC M
19	257989	3	CONNECTOR, 12 JIC F X 06 JIC M
20	257992	3	CONNECTOR, 10 ORB M X 06 JIC M
21	257996	2	CONNECTOR, 12 ORB M X 12 JIC F-SW
22	258002	3	EL, 90D - 06 JIC M X 06 ORB M
23	258005	5	EL, 90D - 06 JIC M X 06 JIC F-SW
24	258014	2	EL, 90D - 08 ORBM X 06 JIC M
25	258018	2	TEE, 12 JIC M X 12 JIC M X 12 JIC M
26	258019	1	TEE, 12 JIC M X 12 JIC M X 12 JIC F-SW - BRANCH
27	258033	4	TEE, 12 JIC F-SW X 12 JIC M X 12 JIC M - RUN
28	258052	2	CONNECTOR, 12 ORB M X 12 JIC M
29	258053	6	CONNECTOR, 08 ORB M X 06 JIC M
30	258004	1	EL, 90D - 06 JIC M X 04 ORB M
31	258058	1	CONNECTOR, 10 ORB M X 08 JIC M
32	258049	1	CONNECTOR, 08 JIC F X 06 JIC M
33	258059	2	CONNECTOR, 06 ORB M X 06 JIC F-SW
34	258348	1	HOSE, 3/4-2WB X 222 LOA - 12 JIC F-SW X 12 JIC-F-SW
A	258380	2	SWIVEL, 12 JIC M X 12 JIC F
B	258304	1	VALVE, CONTROL - 2 WAY- 3 POS. - CLOSED CENTER - HYSPEC - BAG LIFTER
C	258308	2	VALVE, FLOW CONTROL - LAG-620 HYS - CONVEYOR
D	257350	1	VALVE, BALL - 12 ORB F X 12 ORB F - C/W HANDLE
E	258087	1	VALVE, CHECK - 12 ORB F
F	258510	2	CYL, HYD 3 X 24 IN - WING LIFT
G	258381	2	SWIVEL, 06 JIC M X 06 JIC F
H	258550	1	CYL, HYD 2 1/2 X 8 IN - ACTIVE WING/SMART HITCH
I	258320	1	MANIFOLD, HYD - 3 VALVE - CONVEYOR ARM CONTROL

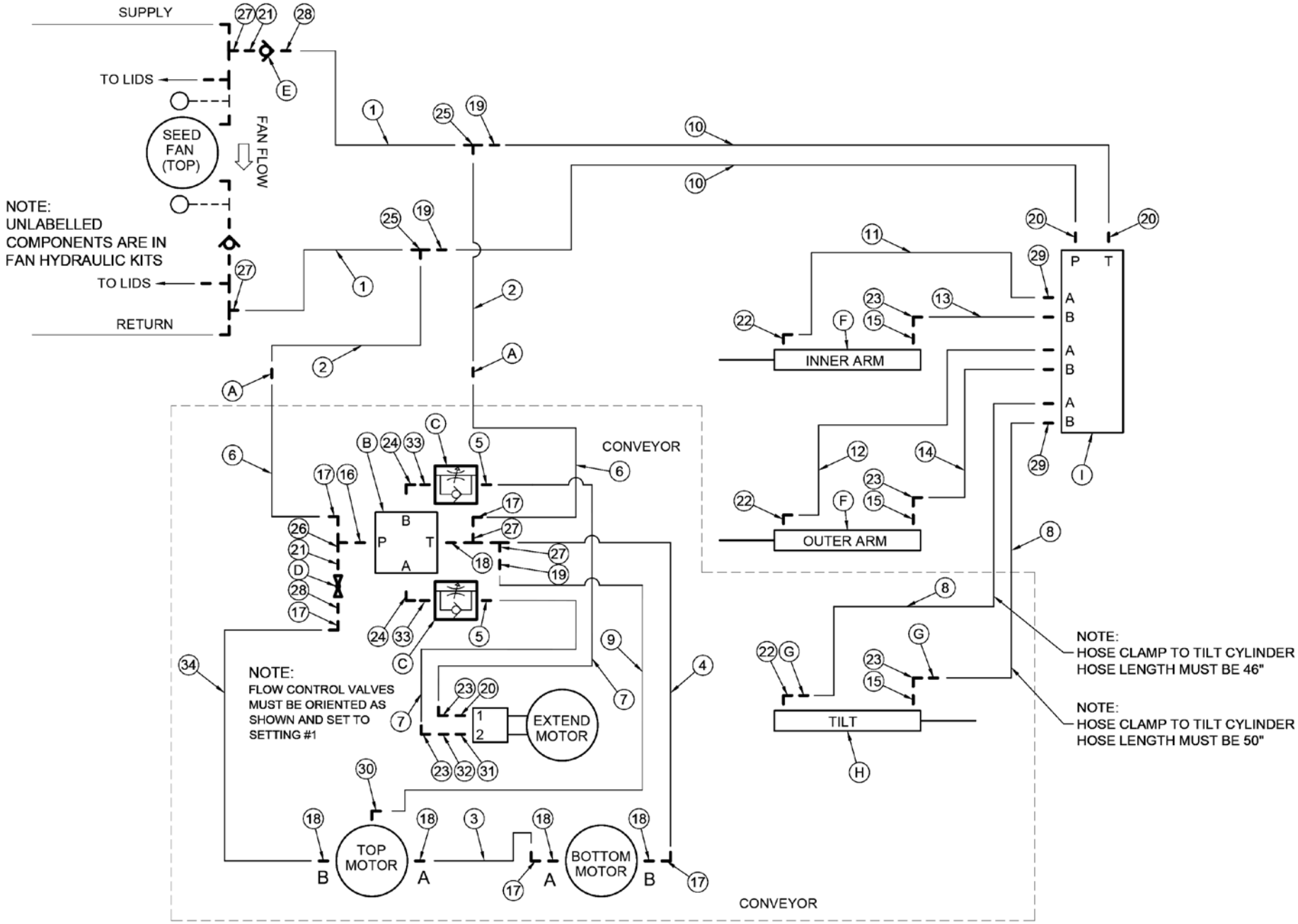
SUPPLY
TO LIDS
SEED FAN (TOP)
FAN FLOW
NOTE: UNLABELLED COMPONENTS ARE IN FAN HYDRAULIC KITS
TO LIDS
RETURN
CONVEYOR
INNER ARM
OUTER ARM
TILT
EXTEND MOTOR
TOP MOTOR
BOTTOM MOTOR
NOTE: FLOW CONTROL VALVES MUST BE ORIENTED AS SHOWN AND SET TO SETTING #1
NOTE: HOSE CLAMP TO TILT CYLINDER HOSE LENGTH MUST BE 46"
NOTE: HOSE CLAMP TO TILT CYLINDER HOSE LENGTH MUST BE 50"
CONVEYOR

Parts Description: Hydraulic Schematic

25 FT Conveyor – 520/560/630 Nova

Part No. 401089-2

ITEM	PART NO.	QTY	DESCRIPTION
1	258287	2	HOSE, 3/4-2WB X 220 LOA - 12 JIC F-SW X 12 JIC-F-SW
2	258330	1	HOSE, 3/4-2WB X 200 LOA - 12 JIC F-SW X 12 JIC-F-SW
3	258331	1	HOSE, 3/4-2WB X 312 LOA - 12 JIC F-SW X 12 JIC-F-SW
4	258290	1	HOSE, 3/4-2WB X 124 LOA - 12 JIC F-SW X 12 JIC-F-SW
5	258291	2	HOSE, 3/4-2WB X 198 LOA - 12 JIC F-SW X 12 JIC-F-SW
6	258292	2	HOSE, 3/4-2WB X 114 LOA - 12 JIC M X 12 JIC-F-SW
7	258177	2	HOSE, 3/8-2WB X 144LOA - 06JIC F-SW X 06JIC F-SW
8	258132	2	HOSE, 3/8-2WB X 270 LOA - 06 JIC F-SW X 06 JIC F-SW
9	258319	1	HOSE, 1/4-2WB X 222 LOA - 06 JIC F-SW X 06 JIC F-SW
10	258187	3	HOSE, 3/8-2WB X 72LOA - 06 JIC F-SW X 06 JIC F-SW
11	258051	2	CONNECTOR, 06 ORB M X 06 JIC M
12	258244	1	HOSE, 3/8-2WB X 160LOA - 06JIC F-SW X 06JIC F-SW
13	258134	1	HOSE, 3/8-2WB X 54 LOA - 06JIC F-SW X 06JIC F-SW
14	258286	1	HOSE, 3/8-2WB X 136 LOA - 06 JIC F-SW X 06 JIC F-SW
15	257980	3	CONNECTOR, 06 ORBM X 06 JIC M - .020 ORIFICE
16	257981	1	CONNECTOR, 08 ORB M X 12 JIC M
17	257987	5	EL, 90D - 12 JIC M X 12 JIC F-SW
18	257988	5	CONNECTOR, 10 ORB M X 12 JIC M
19	257989	3	CONNECTOR, 12 JIC F X 06 JIC M
20	257992	3	CONNECTOR, 10 ORB M X 06 JIC M
21	257996	2	CONNECTOR, 12 ORB M X 12 JIC F-SW
22	258002	3	EL, 90D - 06 JIC M X 06 ORB M
23	258005	5	EL, 90D - 06 JIC M X 06 JIC F-SW
24	258014	2	EL, 90D - 08 ORBM X 06 JIC M
25	258018	2	TEE, 12 JIC M X 12 JIC M X 12 JIC M
26	258019	1	TEE, 12 JIC M X 12 JIC M X 12 JIC F-SW - BRANCH
27	258033	4	TEE, 12 JIC F-SW X 12 JIC M X 12 JIC M - RUN
28	258052	2	CONNECTOR, 12 ORB M X 12 JIC M
29	258053	6	CONNECTOR, 08 ORB M X 06 JIC M
30	258004	1	EL, 90D - 06 JIC M X 04 ORB M
31	258058	1	CONNECTOR, 10 ORB M X 08 JIC M
32	258049	1	CONNECTOR, 08 JIC F X 06 JIC M
33	258059	2	CONNECTOR, 06 ORB M X 06 JIC F-SW
A	258380	2	SWIVEL, 12 JIC M X 12 JIC F
B	258304	1	VALVE, CONTROL - 2 WAY- 3 POS. - CLOSED CENTER - HYSPEC - BAG LIFTER
C	258308	2	VALVE, FLOW CONTROL - LAG-620 HYS - CONVEYOR
D	257350	1	VALVE, BALL - 12 ORB F X 12 ORB F - C/W HANDLE
E	258087	1	VALVE, CHECK - 12 ORB F
F	258510	2	CYL, HYD 3 X 24 IN - WING LIFT
G	258381	2	SWIVEL, 06 JIC M X 06 JIC F
H	258550	1	CYL, HYD 2 1/2 X 8 IN - ACTIVE WING/SMART HITCH
I	258320	1	MANIFOLD, HYD - 3 VALVE - CONVEYOR ARM CONTROL

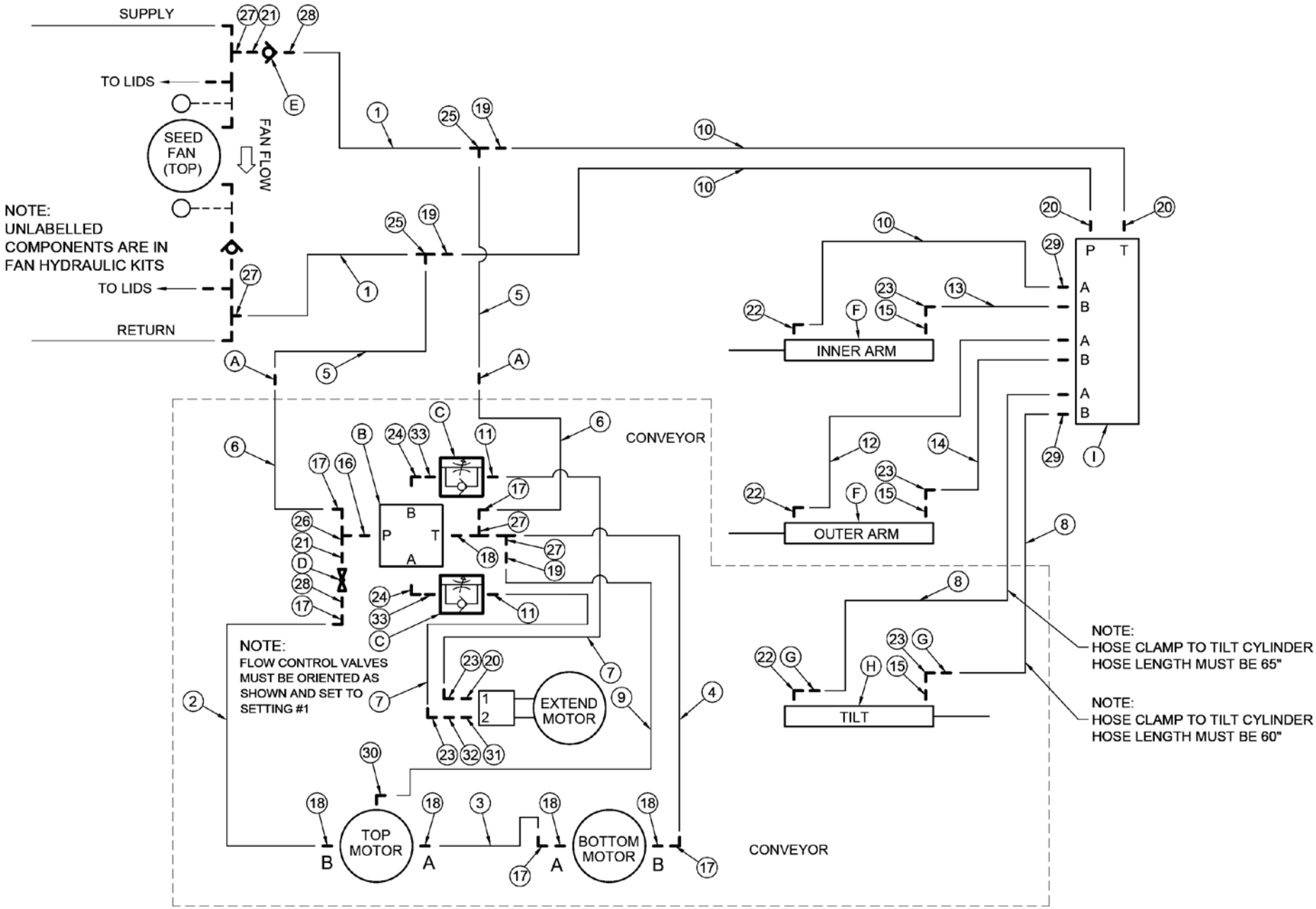
SUPPLY
TO LIDS
SEED FAN (TOP)
FAN FLOW
NOTE: UNLABELLED COMPONENTS ARE IN FAN HYDRAULIC KITS
TO LIDS
RETURN
INNER ARM
OUTER ARM
TILT
CONVEYOR
CONVEYOR
EXTEND MOTOR
TOP MOTOR
BOTTOM MOTOR
NOTE: FLOW CONTROL VALVES MUST BE ORIENTED AS SHOWN AND SET TO SETTING #1
NOTE: HOSE CLAMP TO TILT CYLINDER HOSE LENGTH MUST BE 65"
NOTE: HOSE CLAMP TO TILT CYLINDER HOSE LENGTH MUST BE 60"

Parts Description: Electrical Shematic

Clearance Lights

Part No. 500323-1

ITEM	PART NO.	QTY.	DESCRIPTION
1	257012	1	PLUG, CONNECTOR - 7 WAY - PLASTIC - WAYTEK
2	257014	1	CABLE GUARD SPRING - PLUG - WAYTEK
3	257100	1	TERMINAL BOX
4	257101	1	TERMINAL STRIP - 4 POLE
5	257064	6	CONNECTOR, 3 PIN - SHROUD HALF
6	257051	6	TERMIAL, MALE - WAYTEK
7	257069	6	SEAL, CABLE - WAYTEK
8	257083	3	STRAIN RELIEF - FLEX NUT - 1/2 NPT - WAYTEK
9	257084	3	STRAIN RELIEF - LOCK NUT - 1/2 NPT - WAYTEK
10	257085	3	STRAIN RELIEF - SEAL RING - 1/2 IN - WAYTEK
11	257036	1	CABLE, 4 WIRE - 504 IN - 4/14 GA
12	257036	2	CABLE, 4 WIRE - 162 IN - 4/14 GA

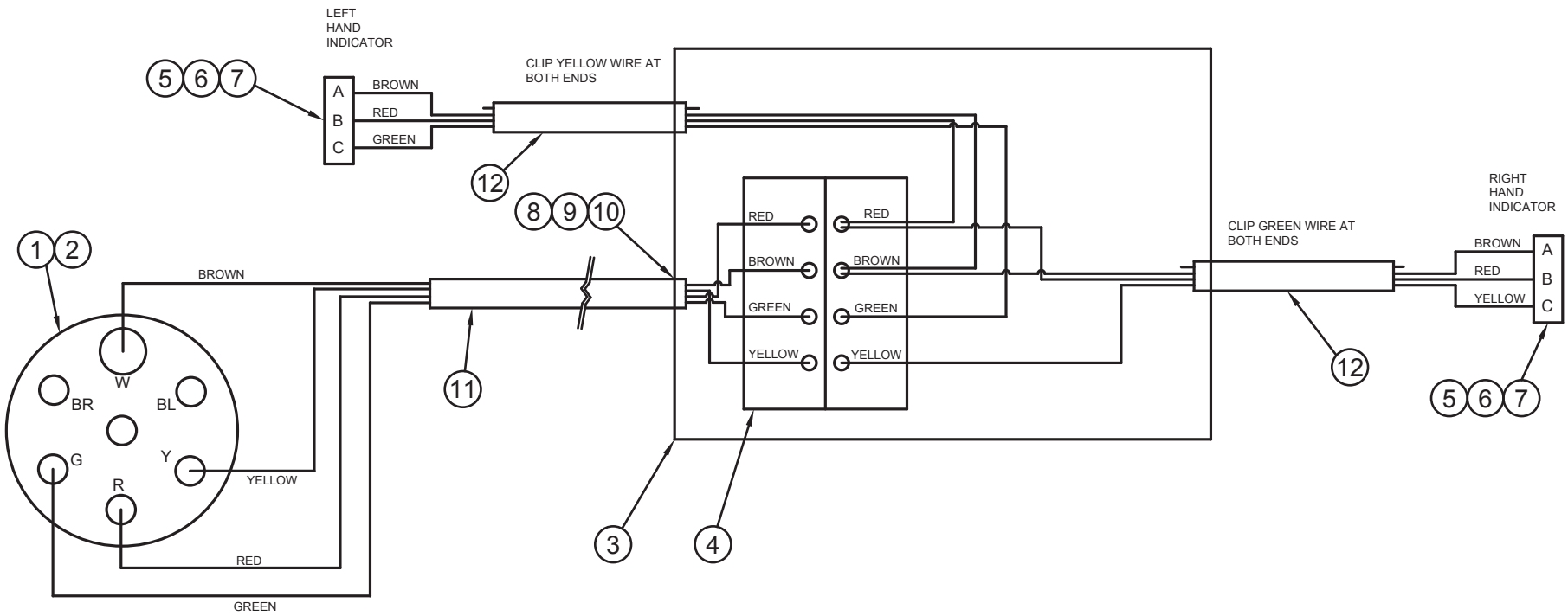
LEFT
HAND
INDICATOR
5 6 7
A
B
C
BROWN
RED
GREEN
CLIP YELLOW WIRE AT
BOTH ENDS
12
8 9 10
1 2
BROWN
W
BR
BL
G
Y
R
YELLOW
RED
GREEN
11
3
4
RED
BROWN
GREEN
YELLOW
RED
BROWN
GREEN
YELLOW
CLIP GREEN WIRE AT
BOTH ENDS
12
RIGHT
HAND
INDICATOR
BROWN
RED
YELLOW
A
B
C
5 6 7

Parts Description: Electrical Shematic

Conveyor

Part No. 501102

ITEM	PART NO.	QTY.	DESCRIPTION
1	250033	1	BOLT, HEX - 1/4 X 1 UNC GR5 PL
2	250507	1	NUT, LOCK - 1/4 UNC - STOVER - PL
3	250559	2	WASHER, FLAT - 1/4 IN PL
4	256660	1	MAGNET POT - 95# PULL, 3 1/4" OD X .44" THK
5	256984	58	WIRE, 16 GA - BLACK - WX16-0
6	256985	37	WIRE, 16 GA - BROWN - WX16-1
7	256986	37	WIRE, 16 GA - RED - WX16-2
8	256988	37	WIRE, 16 GA - YELLOW - WX16-4
9	256989	37	WIRE, 16 GA - GREEN - WX16-5
10	256990	37	WIRE, 16 GA - BLUE - WX16-6
11	256992	37	WIRE, 16 GA - GREY - WX16-8
12	256993	33	WIRE, 16 GA - WHITE - WX16-9
13	257008	6	CONNECTOR, DIN -932106-400 - C/W GASKET
14	257018	3	SWITCH, WAYTEK - MOM ON/OFF/MOM ON - 3 TERMINAL - UNLIT
15	257025	3	SWITCH ACTUATOR - BLACK - NO LENS COLOR
16	257027	2	SWITCH MOUNTING PANEL - END - WAYTEK
17	257028	1	SWITCH MOUNTING PANEL - MIDDLE - WAYTEK
18	257043	37	LOOM, SLIT - 3/4 IN - FLAME RETARDANT - BLACK
19	257045	2	CLIP, LOOM FITTING - 3/4 IN - WAYTEK
20	257046	20	LOOM, SLIT - .350 IN - FLAME RETARDANT - LFB-350 - BLK
21	257049	2	CONNECTOR, PUSH ON - MALE-FEMALE - WAYTEK
22	257051	16	TERMINAL, MALE - WAYTEK WEATHER PACK - 16-14GA
23	257052	14	TERMINAL, FEMALE - WAYTEK WEATHER PACK - 16-14GA
24	257056	9	CONNECTOR, QUICK DISCONNECT - PUSH ON - FEMALE - BLUE - 16/14
25	257065	7	CONNECTOR, 2 PIN - TOWER HALF - WAYTEK
26	257066	8	CONNECTOR, 2 PIN - SHROUD HALF - WAYTEK
27	257076	30	SEAL, CABLE - WAYTEK - GREY - #39001
28	257080	1	FUSE HOLDER, PANEL MOUNT - WAYTEK - 1/4
29	257081	1	FUSE, 20 AMP
30	257086	15	CABLE, 2 WIRE - 16 GA - SJ16-2
31	257090	2	SPLICE KIT - WAYTEK - 6 WAY TPA
32	257091	2	SPLICE KIT - WAYTEK - 6 CONTACT BODY - 280 SERIES
33	257092	2	SPLICE KIT - WAYTEK - CAP - 280 SERIES
34	257093	2	SPLICE KIT - WAYTEK - 6 GANG COMMON BAR
35	257094	3	SPLICE KIT - WAYTEK - CAVITY PLUG - GREEN
36	257095	9	SPLICE KIT - WAYTEK - SPLICE TERMINAL - FEMALE - 31075
37	501221	1	PLATE, FRMD 18GA - CONTROL BOX FRONT - NOVA
38	501222-1	1	PLATE, FRMD 18GA - CONTROL BOX BACK - NOVA

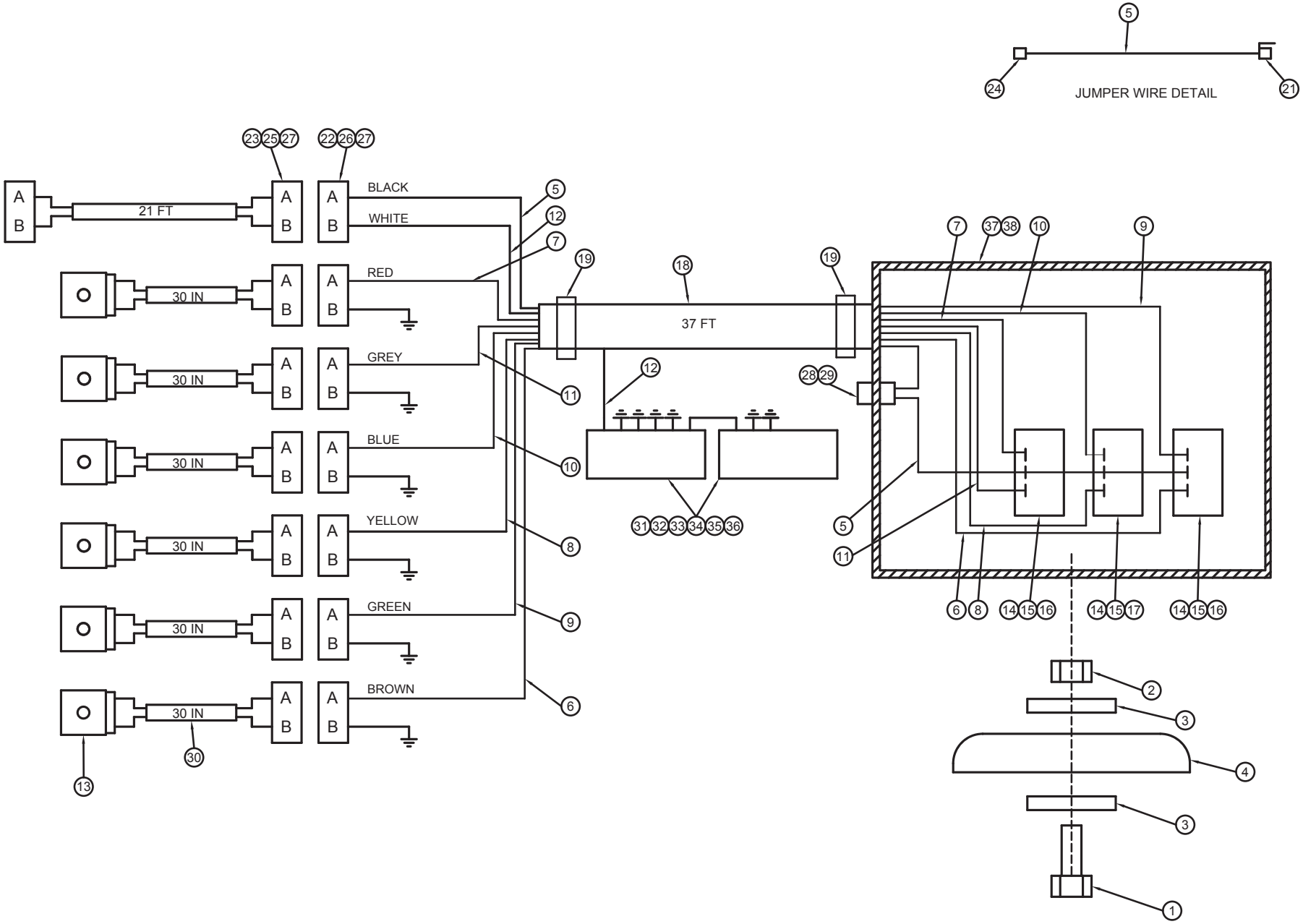
JUMPER WIRE DETAIL
21 FT
30 IN
37 FT
BLACK
WHITE
RED
GREY
BLUE
YELLOW
GREEN
BROWN
A
B
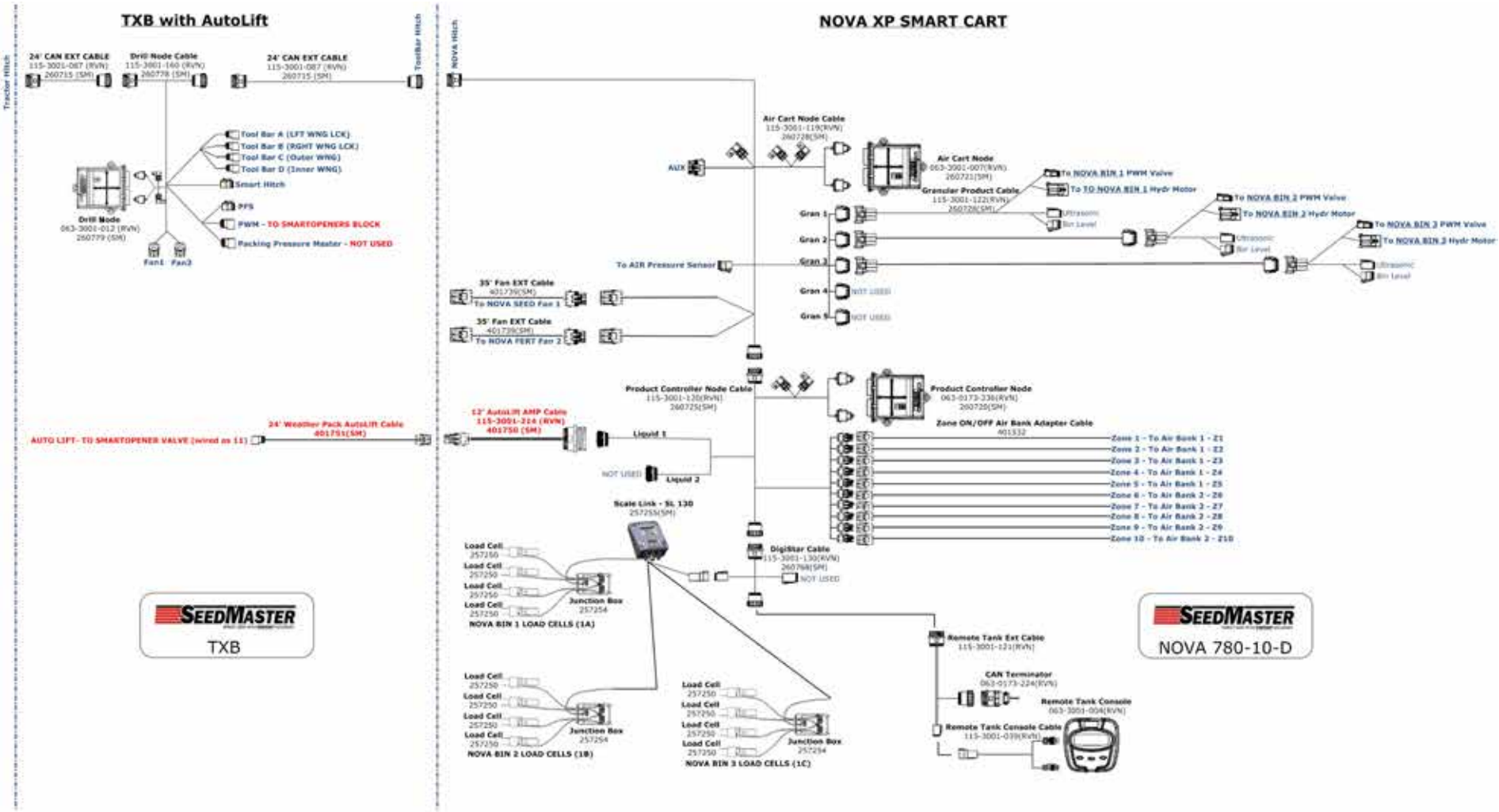
Parts Description:
Electrical Shematic
Raven